CITY OF KIRKLAND
REGISTRATION FORM – PERSONAL WIRELESS SERVICE FACILITY

Per Kirkland Municipal Code Section 26.08, all Personal Wireless Service Facilities (PWSFs) must be registered with the City. Where more than one transmitter, antenna or parameter applies at the same location, please list all relevant information for each item. Return all completed forms to the Building Department with your building permit application.

Company Name _____

Contact Person _____

Company Address _____

_____

Company Phone _____

Building Permit #

Planning Dept. File No.

Site Assessor's Parcel No.: _____

Site Address: _____

_____

Wireless	**Frequency Range**	**Colocation Site**	**Type of Installation**	
⑥ Cellular	⑥ 100KHz-3MHz	⑥ Yes	⑥ Guyed Tower	⑥ Roof Mount
⑥ PCS	⑥ 3MHz-30MHz	⑥ No	⑥ Lattice Tower	⑥ Water Tank
⑥ SMR	⑥ 30MHz-300MHz	⑥ Currently Hosts	⑥ Monopole	⑥ Utility Pole
⑥ Paging	⑥ 300MHz-1500MHz	_____	⑥ Building Mount	⑥ Other (please describe)
⑥ Other	⑥ 1500MHz-300GHz			_____

_____

Transmitter Power output	**Effective radiated power**	**Ground elevation at site**
_____ watts	_____ watts	_____ feet above sea level

Number of antennas at site: _____

Types: _____

Model Number(s): _____

Manufacturer(s): _____

Height above ground: _____

Form submitted by: _____ **Date:** _____

ATTACHMENT 1
Registration Form

Tools

Navigation

Query/Info

Selection

System

The City of Kirkland, Washington - ALLUSERS X = 1302041 Y =

Sca

ATTACHMENT 2
Vicinity Map

ODELIA PACIFIC CORPORATION

RECEIVED
JAN 02 2009
AM PM
PLANNING DEPARTMENT
BY

1/2/09

Sean LeRoy, Planner
City of Kirkland Planning Department
123 5th Avenue
Kirkland, WA 98033-6189

Subject: Verizon Wireless Proposed Antenna Modification SEA Carillon Point

Dear Mr. LeRoy,

I am writing as a follow up to a recent pre-application meeting for a different Verizon Wireless (VZW) site however in that meeting we discussed the city codes for Personal Wireless Facilities in general with regard to attaching antennas to an existing penthouse.

Per our discussion, I believe you indicated that flush mounting antennas on a rooftop penthouse for a property that is located in a non residential zone would not require a pre-application meeting or a separate zoning application and/or process.

The attached plans and project description reflect a proposal for VZW to add antennas to an existing site by flush mounting the proposed antennas on the rooftop penthouse without any projection of the antennas above the existing penthouse. The proposed antennas will be painted to match the color of the penthouse in order for them to be concealed by blending in with the existing structure.

The site is located at Carillon Point and the VZW site name is SEA Carillon Point. The attached plans reflect a change out of selected existing antennas and addition of new antennas as described above.

As a result, I am filing the Building Permit Application for this proposal however per our discussion at the recent pre-application conference you requested that I provide a separate copy of the proposal where in this cases like this one it appears that only a Building Permit will be required.

PROJECT SUMMARY
VZW proposes to replace 4 existing antennas and add 4 antennas all flush mounted on the penthouse of Carillon Point Building B located at 3000 Carillon Point. In addition, VZW proposed to install 4 runs of 1 5/8" coax cables that run from the existing VZW equipment room through the existing chase to the rooftop penthouse. The runs will follow the existing VZW coax runs to the penthouse.

Please call me at 253-218-9017 if you have any questions or need additional information.

Sincerely,

Rick Cardoza
Senior Project Manager

ATTACHMENT 3
Applicant's Proposal

425 Pontius Avenue North, Suite 200
Seattle, WA 98109

253-218-9017 mobile
rcardoza@odelia.com

SHEET INDEX

ARCHITECTURAL
T-1 TITLE SHEET
A-1 OVERALL SITE PLAN
A-1.2 ENLARGED SITE PLAN
A-2 ENLARGED ANTENNA LAYOUTS
A-2.1 GARAGE LEVEL PLAN
A-3 EXISTING AND PROPOSED NORTH ELEVATION
A-3.1 EXISTING AND PROPOSED EAST ELEVATION
A-3.2 EXISTING AND PROPOSED WEST ELEVATION
A-3.3 EXISTING AND PROPOSED SOUTH ELEVATION
A-4 DETAILS

PROJECT DIRECTORY

APPLICANT:
VERIZON WIRELESS
15900 SE EASTGATE WAY
M/S 2S1
BELLEVUE, WA 98008

APPLICANT AGENT:
OSELLA PACIFIC CORP
429 FONTAUS AVENUE N., SUITE 200
SEATTLE, WA 98109
CONTACT: RICK CARDOZA
PHONE (253) 218-6017

ARCHITECT/ELECTRICAL ENGINEER:
KDC ARCHITECTS
4720 208TH STREET SW, SUITE 200
LYNNWOOD, WA 98036
CONTACT: ERIC CAMP
PHONE: (425) 870-8851
FAX: (425) 712-0846

verizonwireless

SEA-CARILLON POINT
3000 CARILLON POINT
KIRKLAND, WA 98033
LAT: 47°39'22" N
LONG: 122°12'27" W

LEGAL DESCRIPTION

CONTRACTOR NOTE

SITE PERSPECTIVE

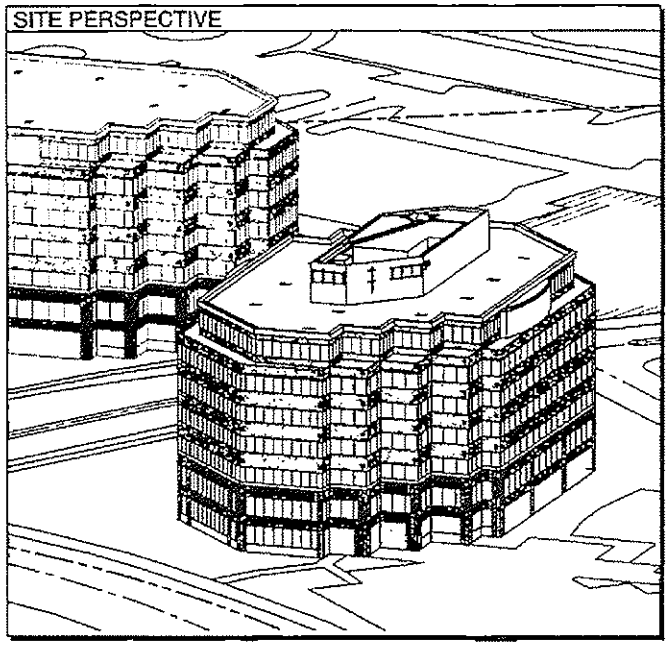

PROJECT INFORMATION

WASHINGTON STATE CODE COMPLIANCE:
2006 IBC, STANDARDS AND AMENDMENTS-WAC 51-50;
2006 IMC, STANDARDS AND AMENDMENTS-WAC 51-51;
2006 IFC, STANDARDS AND AMENDMENTS-WAC 51-54;
2006 IPC, STANDARDS AND AMENDMENTS-WAC 51-56, 51-57

SITE NAME:
SEA-CARILLON POINT

SITE ADDRESS:
3000 CARILLON POINT
KIRKLAND, WA 98033

PROPERTY OWNER:
CARILLON PROPERTIES

JURISDICTION:
CITY OF KIRKLAND

PARCEL NUMBER:
1725059058

PROJECT DESCRIPTION:
THIS PROPOSAL IS FOR THE MODIFICATION OF AN EXISTING UNMANNED TELECOMMUNICATIONS EQUIPMENT SITE. THE PROJECT CONSIST OF THE REMOVAL OF (4) EXISTING PANEL ANTENNAS AND REPLACING THEM WITH (4) PROPOSED PANEL ANTENNAS. PROPOSED ANTENNA TO UTILIZE EXISTING (8) RUNS OF 1-5/8"ø COAX. ALSO THE ADDITION OF (4) PROPOSED PANEL ANTENNAS AND (4) PROPOSED 1-5/8"ø COAX AT SECTOR "C".

GENERAL NOTES

APPROVALS/ISSUE DATES

SITE ALPHA NO.

DATE	ISSUED AS
	Acquisition
	Preliminary - Zoning
	Zoning - Revised Site Permit Application
	Construction Permit Application
	Revised for Zoning/Construction
	Revised for Construction
	Issued Agency & Construction Permit
	As Built/Revised
	For Owner and Engineering Approval

VERIZON WIRELESS			
CELLULAR DESIGN ENGINEER APPROVAL			
PRINTED NAME	SIGNATURE	TITLE	DATE

VERIZON WIRELESS			
PROPERTY OWNER APPROVAL			
PRINTED NAME	SIGNATURE	TITLE	DATE

SYMBOLS LIST

DRIVING DIRECTIONS

CONFIDENTIAL AND PROPRIETARY

Not for disclosure outside VERIZON WIRELESS without permission.

VICINITY MAP

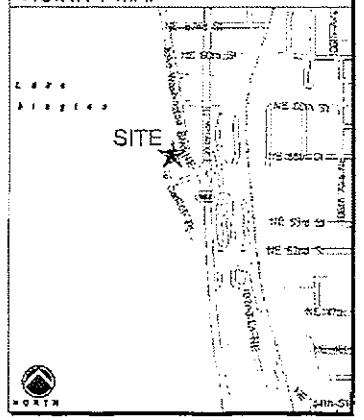

PLANS PREPARED FOR:
verizonwireless

PLANS PREPARED BY:
KDC
ARCHITECTS, ENGINEERS, P.C.

LICENSURE:
5773
REGISTERED ARCHITECT
KENNETH D. CAMP
STATE OF WASHINGTON

DATE: 12/31/2008
DRAWN BY: JPM
CHECKED BY: EJC

REVISIONS

DATE	DESCRIPTION	BY
12/11/2008	ISSUED FOR 90% CD REVIEW	JPM
12/18/2008	ISSUED FOR CONSTRUCTION	JPM
12/31/2008	ISSUED FOR PERMIT CONSTRUCTION	JPM

PROJECT:
SEA-CARILLON POINT
3000 CARILLON POINT
KIRKLAND, WA 98033

T-1

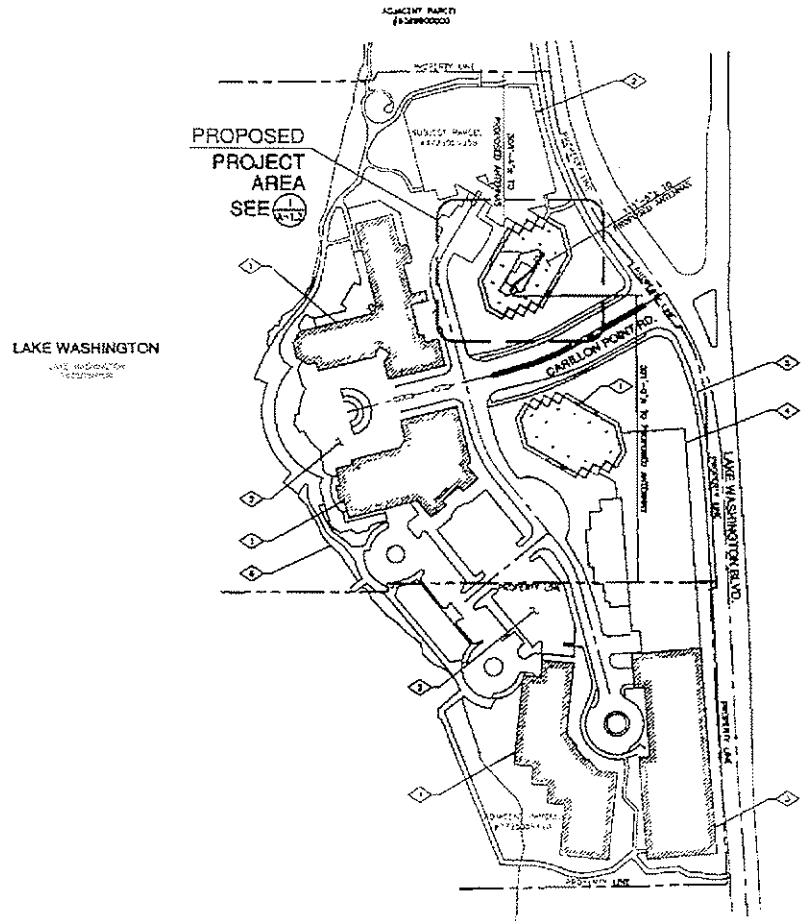

OVERALL SITE PLAN

SCALE FOR 24x36: 1" = 100'-0" SCALE FOR 11x17: 1" = 200'-0"

0 100' 200'
50' 150'

NORTH

GENERAL NOTES

THIS IS NOT A SITE SURVEY.
ALL PROPERTY BOUNDARIES, ORIENTATION OF TRUE NORTH AND STREET LIGHT-WIDTHS HAVE BEEN OBTAINED FROM A TAX PARCEL MAP AND ARE APPROXIMATE.

PROPOSED VERIZON WIRELESS ANTENNA/CABLE TRAY:
PROPOSED VERIZON WIRELESS CABLE TRAY, ANTENNA, ANTENNA MOUNT AND ALL MOUNTING HARDWARE, TO BE PAINTED TO MATCH EXISTING BUILDING (COORDINATE PAINT COLOR WITH BUILDING LANDLORD)

PROPOSED VERIZON WIRELESS EQUIPMENT ROOM:
PROPOSED VERIZON WIRELESS EQUIPMENT ROOM IS LOCATED WITHIN EXISTING BUILDING.

KEYED NOTES

1. EXISTING BUILDING (TYPICAL)
2. EXISTING ASPHALT PARKING LOT (TYPICAL)
3. EXISTING PARKING GARAGE
4. EXISTING UNDERGROUND PARKING GARAGE
5. EXISTING SIDEWALK (TYPICAL)
6. APPROXIMATE EDGE OF EXISTING LAKE WASHINGTON

PLANS PREPARED FOR:

verizonwireless

PLANS PREPARED BY:

KDC
ARCHITECTS, ENGINEERS, P.C.

LICENSURE:

5773
REGISTERED ARCHITECT
KENNETH D. CAMP
STATE OF WASHINGTON

DATE:	12/31/2008
DRAWN BY:	JPM
CHECKED BY:	EJC

REVISIONS

DATE	DESCRIPTION	BY
12/11/2008	ISSUED FOR 90% CD REVIEW	JPM
12/18/2008	ISSUED FOR CONSTRUCTION	JPM
12/31/2008	ISSUED FOR REVISED CONSTRUCTION	JPM

PROJECT:

SEA-
CARILLON POINT

3000 CARILLON POINT
KIRKLAND, WA. 98033

A-1

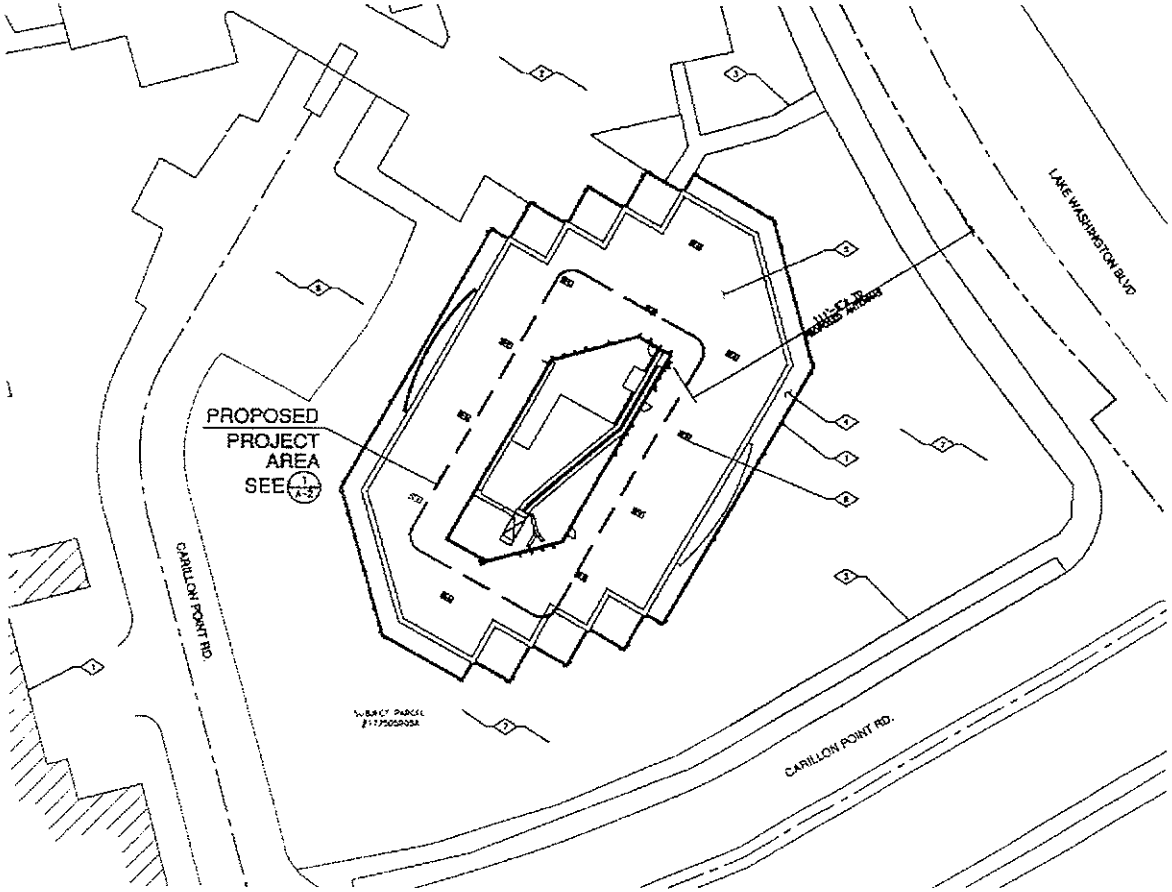

1/A-1.2 ENLARGED SITE PLAN

SCALE FOR 24x36: 1" = 20'-0" SCALE FOR 11x17: 1" = 40'-0"

0 20' 40'
10' 30'

NORTH

GENERAL NOTES

THIS IS NOT A SITE SURVEY:
ALL PROPERTY BOUNDARIES, ORIENTATION OF TRUE NORTH AND STREET HALF-WIDTHS HAVE BEEN OBTAINED FROM A TAX PARCEL MAP AND ARE APPROXIMATE

PROPOSED VERIZON WIRELESS ANTENNA/CABLE TRAY:
PROPOSED VERIZON WIRELESS CABLE TRAY, ANTENNA, ANTENNA MOUNT AND ALL MOUNTING HARDWARE, TO BE PAINTED TO MATCH EXISTING BUILDING (COORDINATE PAINT COLOR WITH BUILDING LANDLORD)

PROPOSED VERIZON WIRELESS EQUIPMENT ROOM:
PROPOSED VERIZON WIRELESS EQUIPMENT ROOM IS LOCATED WITHIN EXISTING BUILDING

KEYED NOTES

1. EXISTING BUILDING (TYPICAL)
2. EXISTING ASPHALT PARKING LOT (TYPICAL)
3. EXISTING SIDEWALK (TYPICAL)
4. EXISTING BUILDING LOWER ROOFTOP
5. EXISTING BUILDING UPPER ROOFTOP
6. EXISTING BUILDING ROOFTOP UNITS/EQUIPMENT (TYPICAL)
7. EXISTING LANDSCAPED AREA (TYPICAL)
8. EXISTING LOADING/UNLOADING AREA

PLANS PREPARED FOR:

verizonwireless

PLANS PREPARED BY:

KDC
ARCHITECTS ENGINEERS, P.C.

LICENSURE:

5773

REGISTERED ARCHITECT

KENNETH D. CAMP
STATE OF WASHINGTON

DATE:	12/31/2008
DRAWN BY:	JPM
CHECKED BY:	EJC

REVISIONS

DATE	DESCRIPTION	BY
12/11/2008	ISSUED FOR DOE ED WEBVIEW	JPM
12/15/2008	ISSUED FOR CONSTRUCTION	JPM
12/31/2008	ISSUED FOR REVISED CONSTRUCTION	JPM

PROJECT:

SEA-
CARILLON POINT

3000 CARILLON POINT
KIRKLAND, WA. 98033

A-1.2

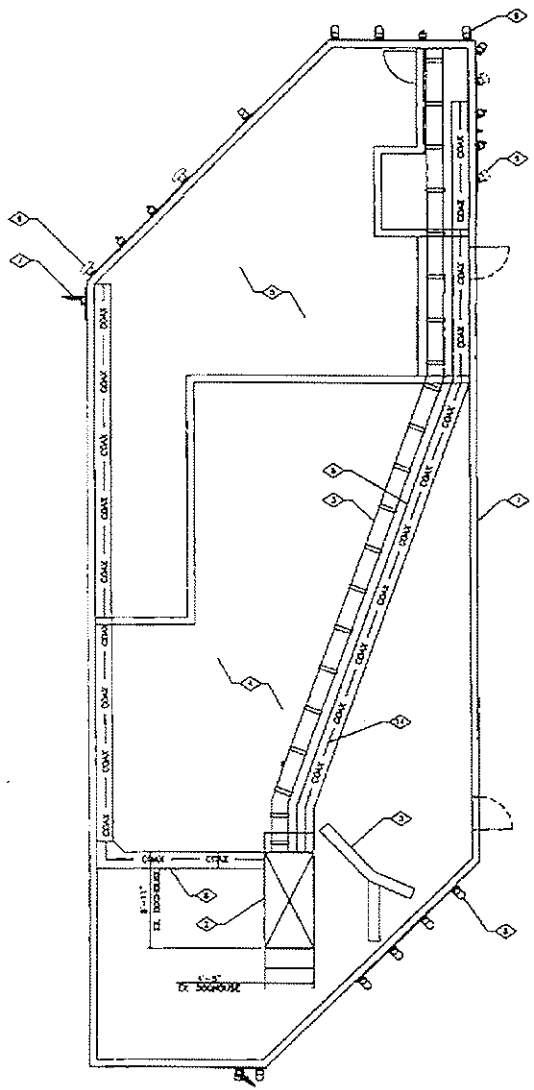

1 EXISTING ANTENNA LAYOUT

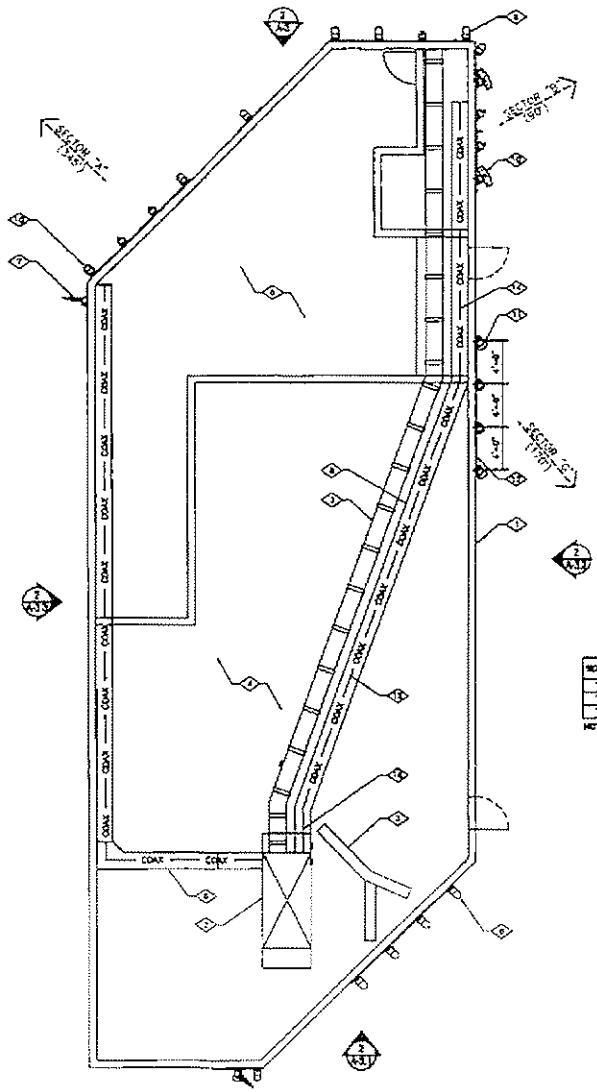

2 PROPOSED ANTENNA LAYOUT

KEYED NOTES

1. EXISTING BUILDING ROOFTOP PENTHOUSE
2. EXISTING DOGHOUSE AT ROOF OF PENTHOUSE
3. EXISTING CABLE TRAY
4. EXISTING PENTHOUSE ROOFTOP
5. EXISTING OPEN AREA WITHIN SCREEN WALLS OPEN TO ABOVE
6. EXISTING VERIZON WIRELESS CABLE TRAY
7. EXISTING MICROWAVE MOUNTED AT PENTHOUSE WALL (2 TOTAL), NOT OTHERS
8. EXISTING ANTENNAS
9. EXISTING VERIZON WIRELESS ANTENNAS TO BE REMOVED AND REPLACED (4 TOTAL, 2 PER SECTORS "A" & "B")
10. PROPOSED VERIZON WIRELESS REPLACEMENT ANTENNAS (4 TOTAL, 2 PER SECTORS "A" & "B")
11. PROPOSED VERIZON WIRELESS ANTENNAS (4 TOTAL AT SECTOR "C") (A-4)
12. PROPOSED VERIZON WIRELESS ANTENNA MOUNT AT EXISTING PENTHOUSE WALL (TO MATCH EXISTING SITE CONDITIONS) (3/A-4)
13. NOT USED
14. EXISTING VERIZON WIRELESS (6) RUNS OF 1-5/8" COAX TO REMAIN AND BE UTILIZED FOR PROPOSED ANTENNAS
15. PROPOSED VERIZON WIRELESS (4) RUNS OF 1-5/8" COAX TO PROPOSED ANTENNAS AT SECTOR "C" ONLY
16. PROPOSED COAX TO UTILIZE EXISTING PORT (4/A-4) AND NEW PORT AS REQUIRED

GENERAL NOTES

THIS IS NOT A SITE SURVEY.
ALL PROPERTY BOUNDARIES, ORIENTATION (OF TRUE NORTH AND DIVIDE HALF-) NOTES HAVE BEEN OBTAINED FROM A TAX PARCEL MAP AND ARE APPROXIMATE.

PROPOSED VERIZON WIRELESS ANTENNA/CABLE TRAY: PROPOSED VERIZON WIRELESS CABLE TRAY, ANTENNAS, ANTENNA MOUNT AND ALL MOUNTING HARDWARE, TO BE PAINTED TO MATCH EXISTING BUILDING (COORDINATE PAINT COLOR WITH BUILDING LANDLORD).

PIPE TO PIPE CONNECTIONS MAY BE REQUIRED AT SECTORS "B" & "C" TO ATTAIN REQUESTED AZIMUTHS. CONTRACTOR TO VERIFY PRIOR TO INSTALLATION.

PROPOSED VERIZON WIRELESS ANTENNA LAYOUT NOTE: PROPOSED ANTENNA LAYOUT AT SECTOR "C" ONLY, TO CONSIST OF CDMA AND LTE ANTENNAS ON OUTSIDE OF ARRAY W/ PCS ANTENNAS IN THE MIDDLE.

SECTOR	QUANTITY	TIP HEIGHT	AZIMUTH	MECH. DOWN TILT	NUMBER OF COAX RUNS	COAX SIZE	COAX LENGTH
"A"	2 NEW	97'-0"	340°	0°	4 EXISTING	1-5/8"	155'-0"±
"B"	2 NEW	97'-0"	80°	0°	4 EXISTING	1-5/8"	209'-0"±
"C"	4 NEW	97'-0"	120°	0°	4 NEW	1-5/8"	146'-0"±

NOTE: (4) PROPOSED DIPLEXERS: (2) AT EQUIPMENT AND (2) AT ANTENNAS

PLANS PROVIDED FOR:

verizonwireless

PLANS PREPARED BY:

KDC
ARCHITECTS ENGINEERS, P.C.
4720 SOUTH KIRKLAND AVE SUITE 204
CHOMACOD, WA 98034
PHONE: 425.670.5355
FAX: 425.312.0848

LICENSURE:

5773 REGISTERED ARCHITECT
Kenneth D. Camp
KENNETH D. CAMP
STATE OF WASHINGTON

DATE: 12/31/2008
DRAWN BY: JPO
CHECKED BY: EJC

REVISIONS

DATE	DESCRIPTION	BY
12/31/2008	ISSUED FOR 90% CD REVIEW	JPO
12/31/2008	ISSUE FOR CONSTRUCTION	JPO
12/31/2008	ISSUED FOR REVISED COMPILATION	JPO

PROJECT:

SEA-
CARILLON POINT

3000 CARILLON POINT
KIRKLAND, WA. 98033

A-2

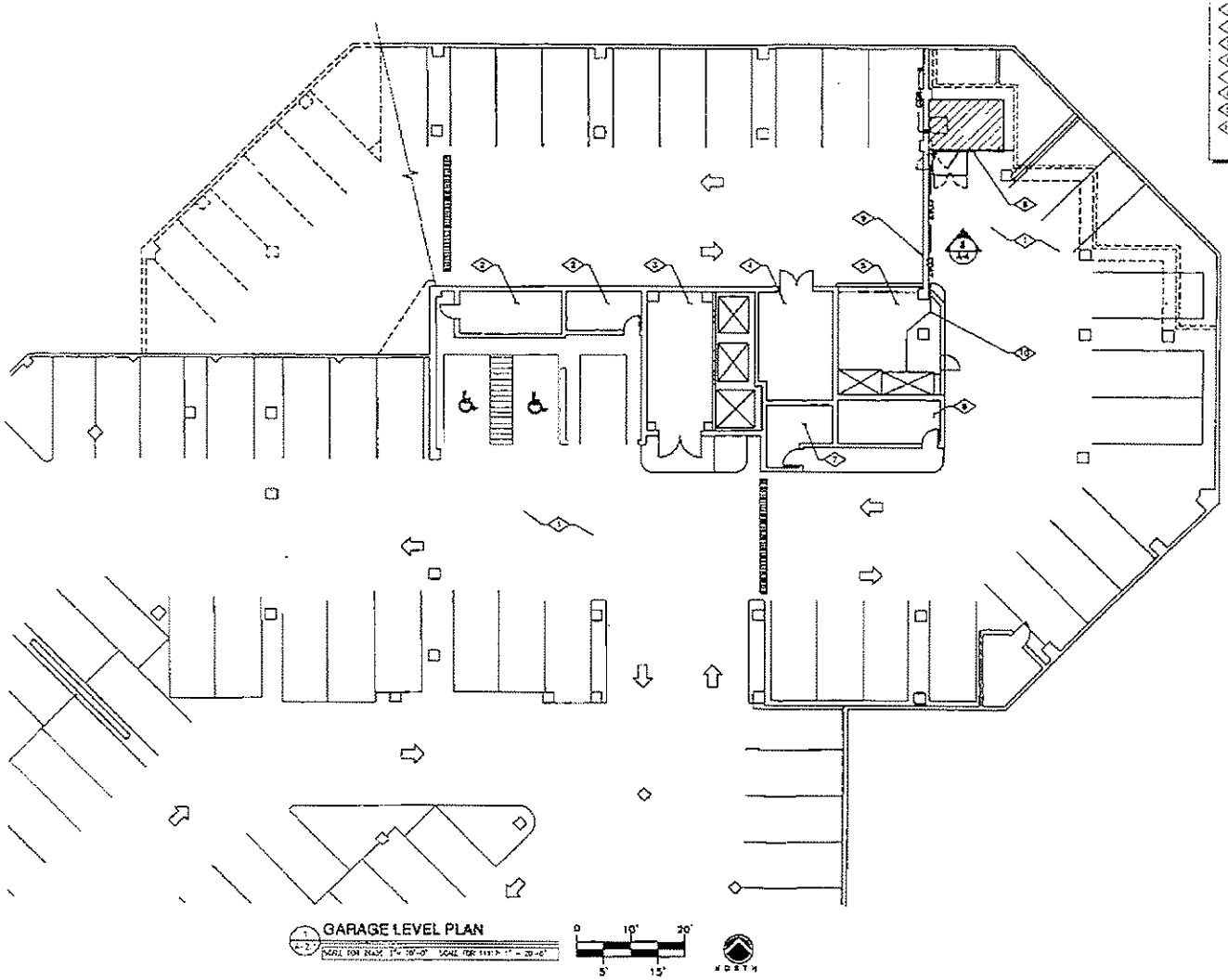

PLANS PREPARED FOR:

verizonwireless

PLANS PREPARED BY:

KDC
ARCHITECTS ENGINEERS, P.C.
LYNNWOOD, WA 98036
PHONE:
FAX:

LICENSURE:

5773

REGISTERED ARCHITECT
KENNETH D. CAMP
STATE OF WASHINGTON

DATE:	12/31/2008
DRAWN BY:	JPM
CHECKED BY:	KDC

REVISIONS

DATE	DESCRIPTION	BY
10/11/2008	ISSUED FOR SITE CD REVIEW	JPM
12/18/2008	ISSUED FOR CONSTRUCTION	JPM
12/31/2008	ISSUED FOR REVISED CONSTRUCTION	JPM

PROJECT:
SEA-
CARILLON POINT

3000 CARILLON POINT
KIRKLAND, WA 98033

A-2.1

KEYED NOTES

1. EXISTING BUILDING (TYPICAL)
2. EXISTING BUILDING ROOFTOP PENTHOUSE
3. EXISTING DOGHOUSE AT ROOF OF PENTHOUSE
4. NOT USED
5. EXISTING MICROWAVE MOUNTS AT PENTHOUSE WALL (2 TOTAL) BY OTHERS
6. EXISTING ANTENNAS
7. EXISTING VERIZON WIRELESS ANTENNAS TO BE REMOVED AND REPLACED (4 TOTAL: 2 PER SECTORS "A" & "B")
8. PROPOSED VERIZON WIRELESS REPLACEMENT ANTENNAS (4 TOTAL: 2 PER SECTORS "A" & "B")

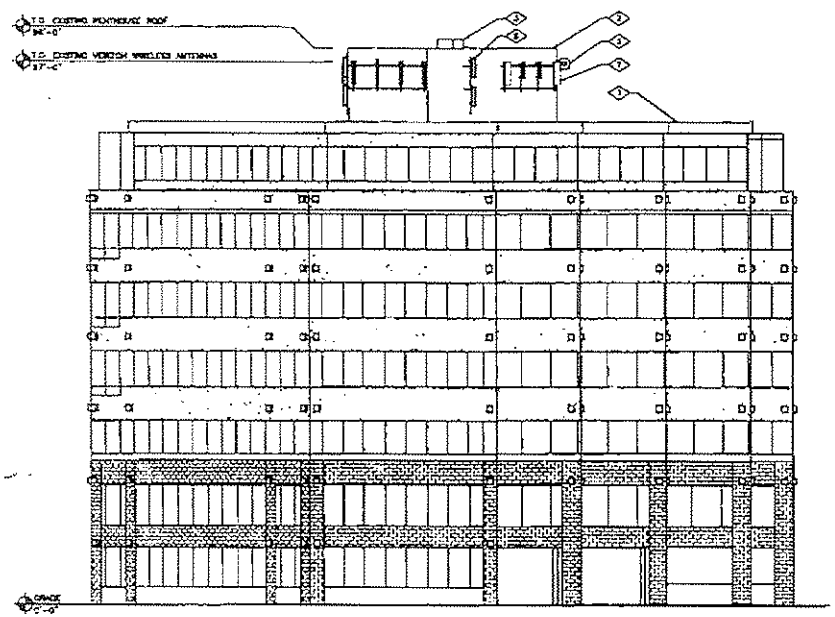

EXISTING NORTH EAST ELEVATION

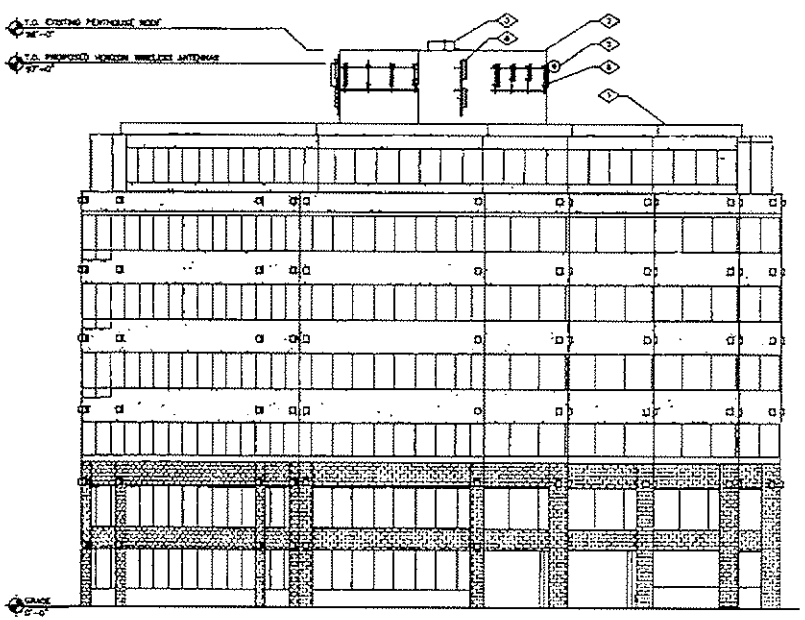

PROPOSED NORTH EAST ELEVATION

PLANS PREPARED FOR:

verizonwireless

PLANS PREPARED BY:

KDC
ARCHITECTS-ENGINEERS, P.C.
4720 200TH STREET SW SUITE 200
LYNNWOOD, WA 98036
PHONE: 425.670.9651
FAX: 425.712.0444

LICENSURE:

5773
REGISTERED ARCHITECT
KENNETH D. CAMP
STATE OF WASHINGTON

DATE:	12/31/2008
DRAWN BY:	JPM
CHECKED BY:	KDC

REVISIONS

DATE	DESCRIPTION	BY
12/31/2008	SALES FOR SITE CO REVIEW	JPM
12/31/2008	SALES FOR CONSTRUCTION	JPM
12/31/2008	SALES FOR REVISED CONSTRUCTION	JPM

PROJECT:

SEA-
CARILLON POINT

3000 CARILLON POINT
KIRKLAND, WA 98033

A-3

KEYED NOTES

1. EXISTING BUILDING (TYPICAL)
2. EXISTING BUILDING ROOFTOP PENTHOUSE
3. EXISTING DOGHOUSE AT ROOF OF PENTHOUSE
4. NOT USED
5. EXISTING MICROWAVE MOUNTED AT PENTHOUSE WALL (2 TOTAL) (BY OTHERS)
6. EXISTING ANTENNAS
7. EXISTING VERIZON WIRELESS ANTENNAS TO BE REMOVED AND REPLACED (4 TOTAL, 2 PER SECTORS "A" & "B")
8. PROPOSED VERIZON WIRELESS REPLACEMENT ANTENNAS (4 TOTAL, 2 PER SECTORS "A" & "B")
9. PROPOSED VERIZON WIRELESS ANTENNAS (2 TOTAL AT SECTOR "C")
10. PROPOSED VERIZON WIRELESS ANTENNA MOUNT AT EXISTING PENTHOUSE WALL (TO MATCH EXISTING SITE CONDITIONS)

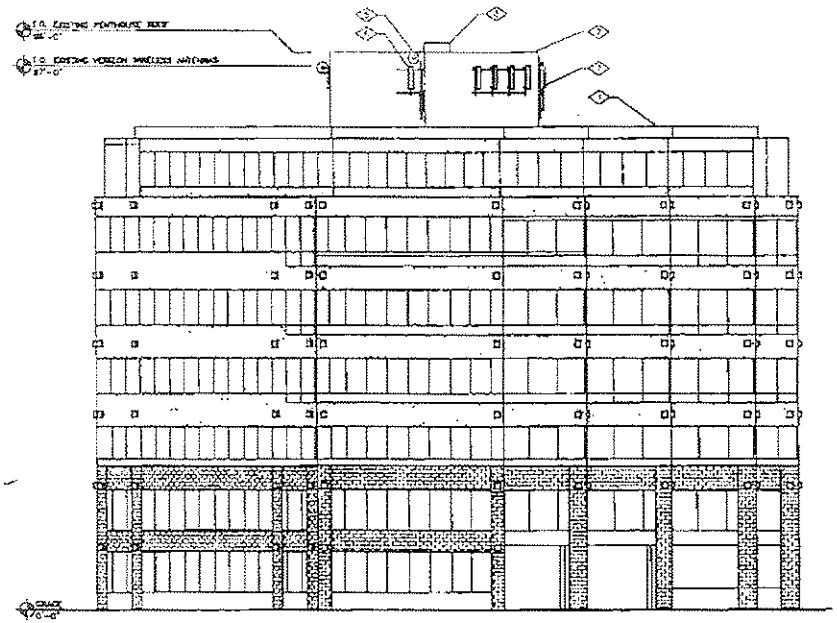

1 EXISTING SOUTH EAST ELEVATION

0 10' 20'
5' 15'

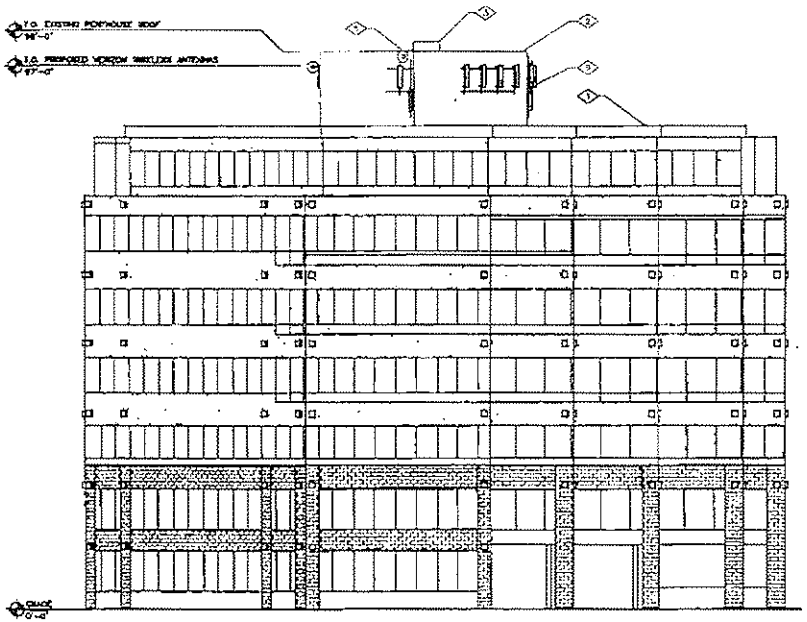

2 PROPOSED SOUTH EAST ELEVATION

0 10' 20'
5' 15'

PLANS PREPARED FOR:

verizonwireless

PLANS PREPARED BY:

KDC
ARCHITECTS ENGINEERS, P.C.

LICENSURE:

5773 REGISTERED ARCHITECT
KENNETH D. CAMP
STATE OF WASHINGTON

DATE:	12/31/2008
DRAWN BY:	JFM
CHECKED BY:	KDC

REVISIONS

DATE	DESCRIPTION	BY
12/10/2008	ISSUED FOR JURISDICTIONAL REVIEW	JFM
12/15/2008	ISSUED FOR CONSTRUCTION	JFM
12/31/2008	ISSUED FOR PERMIT CONSTRUCTION	JFM

PROJECT:

SEA-
CARILLON POINT

3000 CARILLON POINT
KIRKLAND, WA 98033

A-3.1

KEYED NOTES

1. EXISTING BUILDING (TYPICAL)
2. EXISTING BUILDING ROOFTOP PENTHOUSE
3. EXISTING COOLHOUSE AT ROOF OF PENTHOUSE
4. NOT USED
5. EXISTING MICROWAVE MOUNTED AT PENTHOUSE WALL (2 TOTAL), NO OTHERS
6. EXISTING ANTENNAS
7. EXISTING VERIZON WIRELESS ANTENNAS TO BE REMOVED AND REPLACED (4 TOTAL; 2 PER SECTORS "A" & "B")
8. PROPOSED VERIZON WIRELESS REPLACEMENT ANTENNAS (4 TOTAL; 2 PER SECTORS "A" & "B")
9. PROPOSED VERIZON WIRELESS ANTENNAS (4 TOTAL AT SECTOR "D")
10. PROPOSED VERIZON WIRELESS ANTENNA MOUNT AT EXISTING PENTHOUSE WALL (TO MATCH EXISTING SITE CONDITIONS)

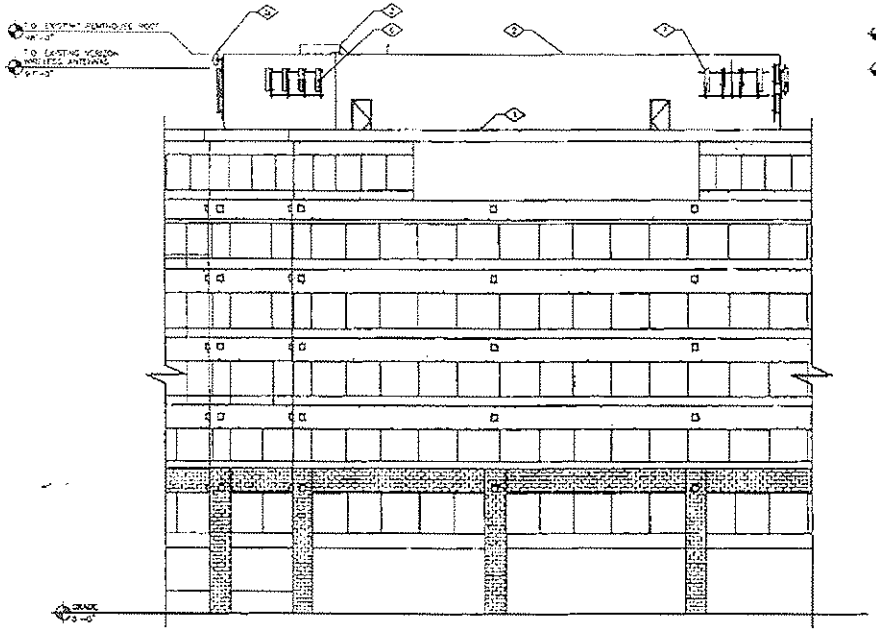

EXISTING WEST ELEVATION

0 10' 20'
5' 15'

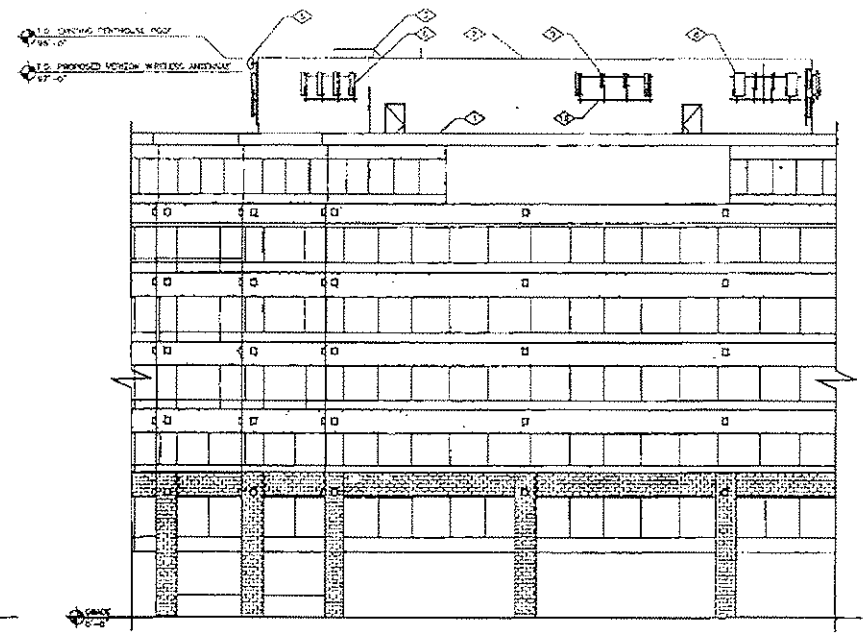

PROPOSED WEST ELEVATION

0 10' 20'
5' 15'

PLANS PREPARED FOR:

verizon wireless

PLANS PREPARED BY:

KDC
ARCHITECTS, ENGINEERS, P.C.

LICENSURE:

5773

REGISTERED ARCHITECT

KENNETH D. CAMP
STATE OF WASHINGTON

DATE: 12/31/2005

DRAWN BY: JPM

CHECKED BY: EJC

REVISIONS

DATE	DESCRIPTION	BY
12/11 2004	ISSUED FOR DES CO REVIEW	JPM
12/15 2005	ISSUED FOR CONSTRUCTION	JPM
12/31 2005	ISSUED FOR REVISED CONSTRUCTION	JPM

PROJECT:

SEA-CARILLON POINT

3000 CARILLON POINT
KIRKLAND, WA 98033

A-3.2

KEYED NOTES

1. EXISTING BUILDING (TYPICAL)
2. EXISTING BUILDING ROOFTOP PENTHOUSE
3. EXISTING DOORHOUSE AT ROOF OF PENTHOUSE
4. NOT USED
5. EXISTING MICROWAVE MOUNTED AT PENTHOUSE WALL (2 TOTAL), BY OTHERS
6. EXISTING ANTENNAS
7. EXISTING VERIZON WIRELESS ANTENNAS TO BE REMOVED AND REPLACED (4 TOTAL; 2 PER SECTORS "A" & "B")
8. PROPOSED VERIZON WIRELESS REPLACEMENT ANTENNAS (4 TOTAL, 2 PER SECTORS "A" & "B")

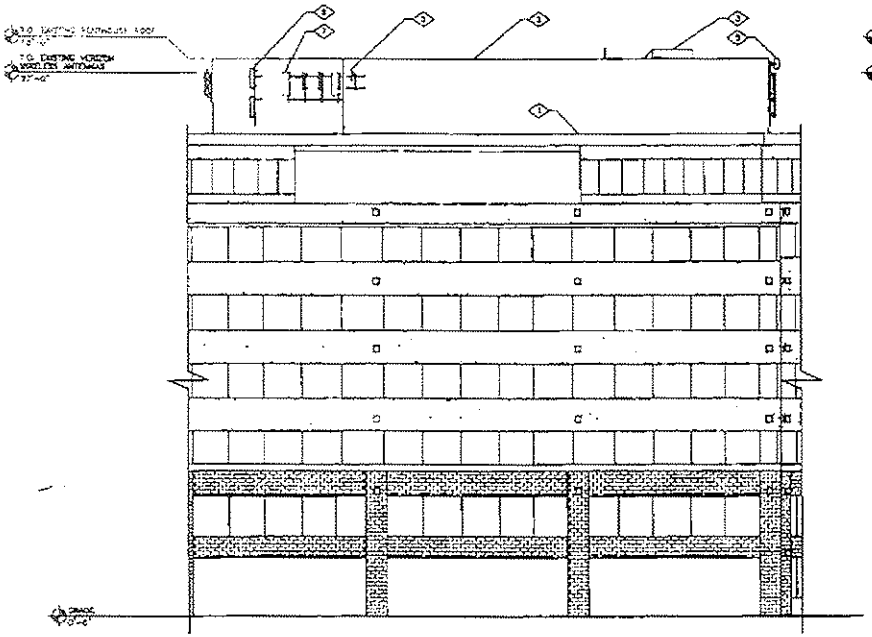

EXISTING EAST ELEVATION

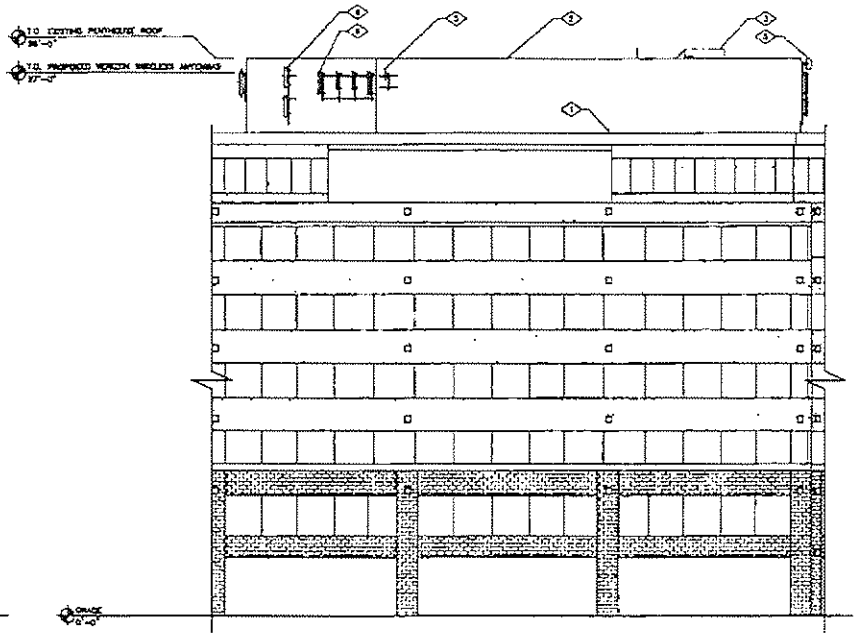

PROPOSED EAST ELEVATION

0 10' 20'
5' 15'

PLANS PREPARED FOR:

verizon wireless

PLANS PREPARED BY:

KDC
ARCHITECTS.ENGINEERS, P.C.
4720 36TH TOWER SW SUITE 200
LYNNWOOD, WA 98036
PHONE: 425.470.0451
FAX: 425.712.0846

LICENSURE:

5773
REGISTERED ARCHITECT
KENNETH D. CAMP
STATE OF WASHINGTON

DATE:	12/31/2008
DRAWN BY:	JPM
CHECKED BY:	FJC

REVISIONS

DATE	DESCRIPTION	BY
12/17 2008	ISSUED FOR 90% CD REVIEW	JPM
12/18 2008	ISSUED FOR CONSTRUCTION	JPM
12/31 2008	ISSUED FOR REVISED CONSTRUCTION	JPM

PROJECT:

SEA-CARILLON POINT

3000 CARILLON POINT
KIRKLAND, WA 98033

A-3.3

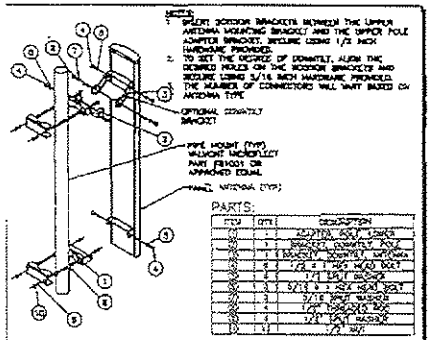

NOTES:
1. INSERT SCREWS BRACKETS BETWEEN THE UPPER ANTENNA MOUNTING BRACKET AND THE UPPER POLE ADAPTER BRACKET. SECURE USING 1/2 INCH HARDWARE PROVIDED.
2. TO SET THE DEGREE OF DOWNTILT, ALIGN THE DESIRED HOLES ON THE SCREWS BRACKETS AND SECURE USING 5/16 INCH HARDWARE PROVIDED. THE NUMBER OF CONNECTORS WILL VARY BASED ON ANTENNA TYPE.

OPTIONAL DOWNTILT BRACKET

PIPE MOUNT (TYP) WALKOUT MICROFLECT PART #81001 OR APPROVED EQUAL

PANEL ANTENNA (TYP)

PARTS:

ITEM	QTY	DESCRIPTION
1	1	ADAPTER POLE LOWER
2	1	BRACKET, DOWNTILT, POLE
3	1	BRACKET, DOWNTILT, ANTENNA
4	2	1/2 x 1 HEX HEAD BOLT
5	4	1/2 LOCK WASHER
6	3	5/16 x 1 HEX HEAD BOLT
7	3	5/16 LOCK WASHER
8	4	1/2 LOCK WASHER
9	4	1/2 LOCK WASHER
10	4	1/2 NUT

1 ANTENNA MOUNTING DETAIL
A-4 NOT TO SCALE

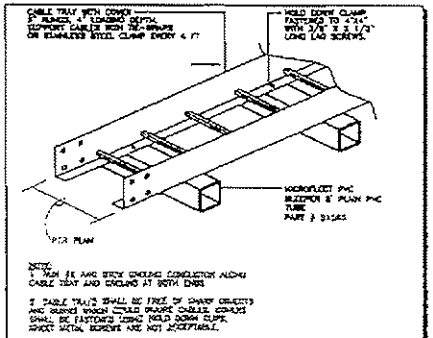

CABLE TRAY WITH COVER
5" RUNNER, 4" LOADING DEPTH. SUPPORT CABLES WITH TIE-WRAPS OR STAINLESS STEEL CLAMP EVERY 4 FT

HOLD DOWN CLAMP FASTENED TO 4"x4" WITH 3/8" X 3 1/2" LONG LAG SCREWS.

MICROFLECT PVC BLEEPER 8" PLAIN PVC TUBE PART # 81584

PER PLAN

NOTE:
1. RUN #6 AND STICK GROUND CONDUCTOR ALONG CABLE TRAY AND GROUND AT BOTH ENDS
2. CABLE TRAYS SHALL BE FREE OF SHARP OBJECTS AND BURRS WHICH COULD DAMAGE CABLES. SCREWS SHALL BE FASTENED USING HOLD DOWN CLIPS. SHEET METAL SCREWS ARE NOT ACCEPTABLE.

2 CABLE TRAY @ ROOFTOP DETAIL
A-4 NOT TO SCALE

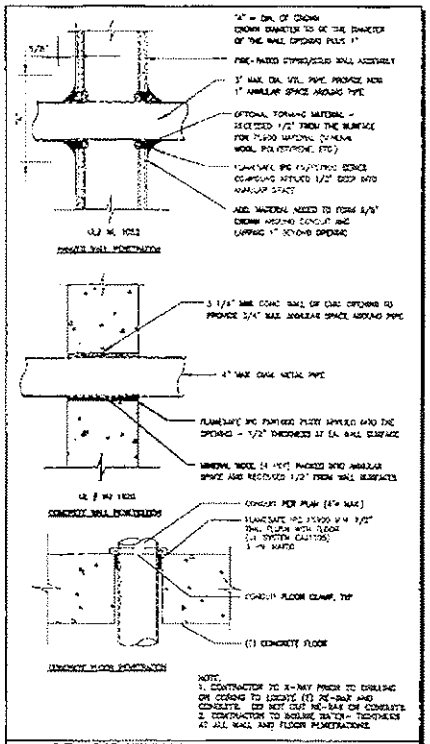

"A" = DIA. OF CROWN
CROWN DIAMETER TO BE THE DIAMETER OF THE WALL OPENING PLUS 1"

FIRE-RATED STRIPS/COLD WALL ASSEMBLY

3" MAX. DIA. STL. PIPE PROVIDE NOT 1" ANNULAR SPACE AROUND PIPE

OPTIONAL FORMING MATERIAL - RECESSED 1/2" FROM THE SURFACE FOR FLOOD MATERIAL (MINERAL WOOL, POLYETHYLENE, ETC)

FLAMESAFE IPC FLOODING SERIES COMPOUND APPLIED 1/2" DEEP INTO ANNULAR SPACE

ADD MATERIAL NEEDED TO FORM 5/8" CROWN AROUND CONDUIT AND EXPAND 1" BEYOND OPENING

UL# WL 1052

FINISHED WALL PENETRATION

3 1/4" MAX. CONC. WALL OF CULL OPENING TO PROVIDE 3/4" MAX. ANNULAR SPACE AROUND PIPE

4" MAX. CONC. METAL PIPE

FLAMESAFE IPC FLOODING PLUGS APPLIED INTO THE OPENING - 1/2" THICKNESS AT EA. WALL SURFACE

MINERAL WOOL (4 PCF) PACKED INTO ANNULAR SPACE AND RECESSED 1/2" FROM WALL SURFACES

UL # WL 1020

CONCRETE WALL PENETRATION

CONDUIT PER PLAN (4" MAX)

FLAMESAFE IPC FLOOD WITH 1/2" THK. FLUSH WITH FLOOR (UL SYSTEM CAUTION) 3 HR RATED

CONDUIT FLOOR CLAMP, TYP

(C) CONCRETE FLOOR

CONCRETE FLOOR PENETRATION

NOTE:
1. CONTRACTOR TO X-RAY PRIOR TO DRILLING OR CORING TO LOCATE (E) RE-BAR AND CONDUITS. DO NOT CUT RE-BAR OR CONDUITS
2. CONTRACTOR TO SEALING WATER - TIGHTNESS AT ALL WALL AND FLOOR PENETRATIONS

3 PENETRATION DETAIL
A-4 NOT TO SCALE

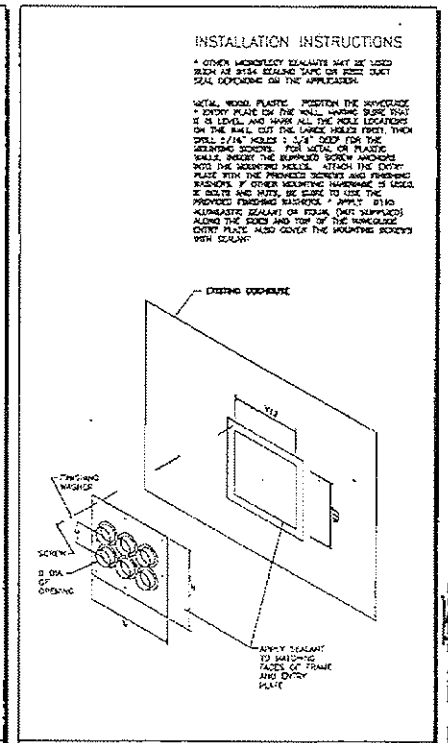

INSTALLATION INSTRUCTIONS

* OTHER MICROFLECT SEALANTS MAY BE USED SUCH AS 9134 SEALING TAPE OR SIZE DUCT SEAL DEPENDING ON THE APPLICATION.

METAL, WOOD, PLASTIC. POSITION THE MOVEGUIDE * ENTRY PLATE ON THE WALL, MAKING SURE THAT IT IS LEVEL, AND MARK ALL THE HOLE LOCATIONS ON THE WALL. CUT THE LARGE HOLES FIRST, THEN DRILL 5/16" HOLES + 3/8" DEEP FOR THE MOUNTING SCREWS. FOR METAL OR PLASTIC WALLS, INSERT THE SUPPLIED SCREW ANCHORS INTO THE MOUNTING HOLES. ATTACH THE ENTRY PLATE WITH THE PROVIDED SCREWS AND FINISHING WASHERS. IF OTHER MOUNTING HARDWARE IS USED, IE BOLTS AND NUTS, BE SURE TO USE THE PROVIDED FINISHING WASHERS. * APPLY 9140 ALUMASTIC SEALANT OR EQUAL (NOT SUPPLIED) ALONG THE SIDES AND TOP OF THE MOVEGUIDE ENTRY PLATE. ALSO COVER THE MOUNTING SCREWS WITH SEALANT.

EXISTING DOGHOUSE

FINISHING WASHER

SCREW

8 DIA. OF OPENING

APPLY SEALANT TO MATCHING FACES OF FRAME AND ENTRY PLATE

4 DOGHOUSE PORT DETAIL
A-4 NOT TO SCALE

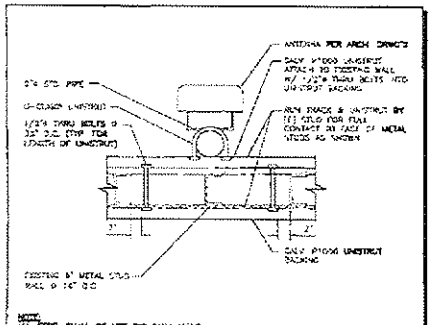

ANTENNA PER ARCH. DRWG'S

DALY P1000 UNISTRUT ATTACH TO EXISTING WALL W/ 1/2"ø THRU BOLTS INTO UNISTRUT BACKING

3"ø STD. PIPE

CH-CLAMP UNISTRUT

1/2"ø THRU BOLTS @ 32" O.C. (TYP FOR LENGTH OF UNISTRUT)

RUN TRACK & UNISTRUT BY (E) STUD FOR FULL CONTACT IN FACE OF METAL STUDS AS SHOWN

DALY P1000 UNISTRUT BACKING

EXISTING 6" METAL STUD WALL @ 16" O.C.

NOTE:
ALL STEEL SHALL BE HOT DIP GALV. U.N.O.

5 ANTENNA MOUNT AT WALL DETAIL
A-4 NOT TO SCALE

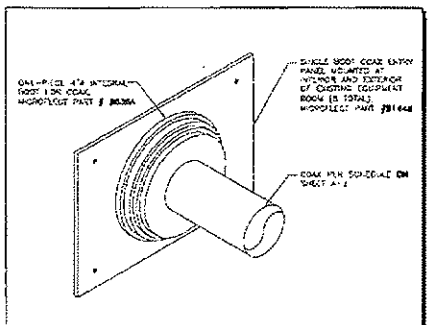

ONE-PIECE 4"ø INTERNAL ROOF FOR COAX MICROFLECT PART # 86384

SINGLE ROOF COAX ENTRY PANEL MOUNTED AT INTERIOR AND EXTERIOR OF EXISTING EQUIPMENT ROOM (8 TOTAL) MICROFLECT PART #81444

COAX PER SCHEDULE ON SHEET A-1

6 COAX ENTRY PANEL DETAIL
A-4 NOT TO SCALE

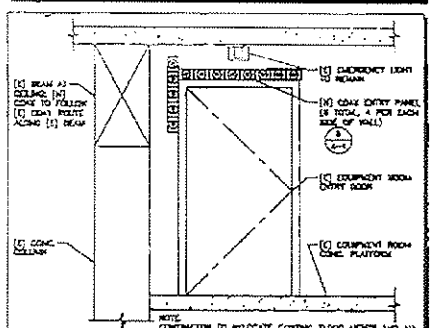

[E] BEAM AS CEILING; [N] COAX TO FOLLOW [E] COAX ROUTE ALONG [E] BEAM

[E] EMERGENCY LIGHT TO REMAIN

[N] COAX ENTRY PANEL (8 TOTAL, 4 PER EACH SIDE OF WALL)

[E] EQUIPMENT ROOM ENTRY DOOR

[E] CONC. COLUMN

[E] EQUIPMENT ROOM CONC. PLATFORM

NOTE:
CONTRACTOR TO RELOCATE EXISTING FLOOD LIGHTS AND ALL CONDUITS AT INTERIOR WALL OF EQUIPMENT TO ACCOMMODATE NEW ENTRY PANELS

7 PARTIAL EQUIP. ROOM ELEVATION
A-4 NOT TO SCALE

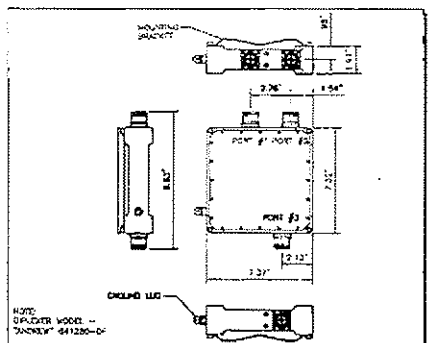

MOUNTING BRACKET

PORT #1 PORT #2

PORT #3

GROUND LUG

NOTE:
DIPLEXER MODEL - "ANDREW" 641280-DF

8 DIPLEXER DETAIL
A-4 NOT TO SCALE

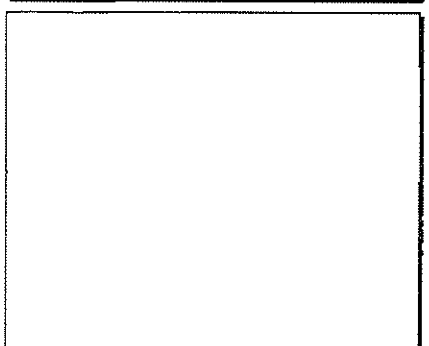

9 DOGHOUSE PORT DETAIL
A-4 NOT TO SCALE

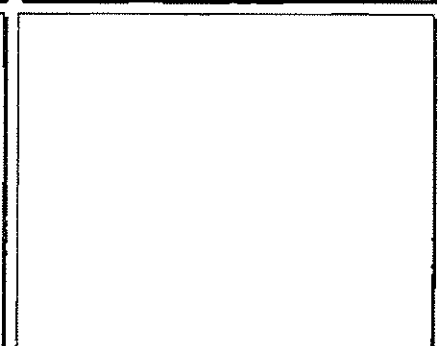

10 NOT USED
A-4 NOT TO SCALE

PLANS PREPARED FOR:

verizon wireless

PLANS PREPARED BY:

KDC
ARCHITECT/LENGINEERS, P.C.

LICENSURE:

5773

REGISTERED ARCHITECT

KENNETH D. CAMP
STATE OF WASHINGTON

DATE:	12/31/2008
DRAWN BY:	JPM
CHECKED BY:	EJC

REVISIONS

DATE	DESCRIPTION	BY
12/11 2008	ISSUED FOR 90% CD REVIEW	JPM
12/12 2008	ISSUED FOR CONSTRUCTION	JPM
12/31 2008	ISSUED FOR REVISED CONSTRUCTION	JPM

PROJECT:

SEA-CARILLON POINT

3000 CARILLON POINT
KIRKLAND, WA 98033

A-4

CITY OF KIRKLAND
Planning and Community Development Department
123 Fifth Avenue, Kirkland, WA 98033 425.587-3225
www.ci.kirkland.wa.us

DEVELOPMENT STANDARDS LIST

File: ZON09-00007

ZONING CODE STANDARDS

115.25 Work Hours. It is a violation of this Code to engage in any development activity or to operate any heavy equipment before 7:00 am. or after 8:00 pm Monday through Friday, or before 9:00 am or after 6:00 pm Saturday. No development activity or use of heavy equipment may occur on Sundays or on the following holidays: New Year's Day, Memorial Day, Independence Day, Labor Day, Thanksgiving, and Christmas Day. The applicant will be required to comply with these regulations and any violation of this section will result in enforcement action, unless written permission is obtained from the Planning official.

115.95 Noise Standards. The City of Kirkland adopts by reference the Maximum Environmental Noise Levels established pursuant to the Noise Control Act of 1974, RCW 70.107. See Chapter 173-60 WAC. Any noise, which injures, endangers the comfort, repose, health or safety of persons, or in any way renders persons insecure in life, or in the use of property is a violation of this Code.

BUILDING DEPARTMENT CONDITIONS

Buildings and structures must comply with current editions of the International Building, Mechanical and Fire Codes and the Uniform Plumbing Code as adopted and amended by the State of Washington and the City of Kirkland.

Structures must be designed for seismic design category D, wind speed of 85 miles per hour and exposure C.

ATTACHMENT 4
Development Stand's