NON-IONIZING ELECTROMAGNETIC EXPOSURE ANALYSIS
&
ENGINEERING CERTIFICATION

SITE NUMBER: SB13

SITE NAME: Carillon Point

SITE ADDRESS: 2000 Carillon Point
Kirkland, WA 98033

DATE: February 22, 2011

PREPARED BY:

B. J. THOMAS, P.E.
7607 80th Avenue NE
Marysville, WA 98270
(206) 851-1106

PROJECT

The proposed AT&T project consists of a WCF (Wireless Communications Facility) located at 200 Carillon Point, Kirkland, WA 98033, King County tax parcel 1725059058. The planned improvements include addition of (3) panel antennas for LTE service on an existing building rooftop with supporting BTS (Base Transmission System) radio equipment in an equipment room at an on-air AT&T site.

EQUIPMENT

Type of Service: GSM 1900, UMTS 1900, GSM 850, GSM 1900, LTE 700

Antennas: Kathrein 800 10764
KMW AM-X-CD-16-65-00T-RET
Powerwave P65-17-XLH-RR

Sectors: (3) (X = 120° & 140 °, Y = 210°, Z = 10° & 350°)

Maximum Power: GSM 1900 - 626 w (57.97 dBm ERP)
UMTS 1900 – 503 w (57.02 dBm ERP)
UMTS 1900_1 – 503 w (57.02 dBm ERP)
GSM 850 - 385 w (55.86 dBm ERP)
UMTS 850 – 363 w (55.61 dBm ERP)
LTE 700 - 716 w (58.55 dBm ERP)

Antenna Rad Center: 65' AGL

CALCULATIONS

Calculations for RF power densities near ground level are based on the "**Evaluating Compliance with FCC Guidelines for Human Exposure to Radio Frequency Electromagnetic Fields OET Bulletin 65"** Edition 97-01, August 1997 issued by the Federal Communications Commission Office of Engineering & Technology.

Section 2 of **OET Bulletin 65** demonstrates that "for a truly worst-case prediction of power density at or near the surface, such as at ground-level or on a rooftop, 100% reflection of incoming radiation can be assumed, resulting in a potential doubling of predicted field strength and a four-fold increase in (far field equivalent) power density". Therefore the following equation is used:

$$S = EIRP/\pi R^2$$

Where S = power density (mW/cm²), EIRP = equivalent isotropically radiated power and R = distance to the center of the radiation antenna (cm)

Attached as an exhibit are the MPE (Maximum Power Exposure) calculations using the above referenced formula and the antenna manufacturer vertical pattern information using a conservative 20 dB loss below main lobe.
The calculations show that the maximum MPE at ground level (6' above AGL) at the base of the building and the power density is 0.005011 mW/cm² with power levels as provided by AT&T RF Data Sheet. This is .08838% of the MPE limit for the general population/uncontrolled exposure of 0.567 mW/cm² as referenced in **Table I OET Bulletin 65 Appendix A** for the lowest frequency range.

ENVIRONMENTAL EVALUATION

Routine environmental evaluation is required if a PCS broadband/cellular facility with building mounted antennas has a total power of all channels in any given sector greater than 2,000W ERP (PCS)/ 1,000W ERP (cellular) as referenced in "**Table 2 Transmitters, Facilities and Operations subject to Routine environmental Evaluation" of Bulletin 65.** For the proposed facility, the total power in any given sector is less than 2,000W ERP (PCS) & 1,000W (cellular); therefore, the WCF is categorically exempt from requirement for routine environmental processing.

FCC COMPLIANCE

The general population/uncontrolled exposure near the building, including persons at ground level, surrounding properties, inside and on existing structures will have RF exposure much lower than the "worst case" scenario, which is a small fraction of the MPE limit.

Only trained persons will be allowed to access the rooftop for maintenance operations. AT&T and/or its contractors will provide training to make the employees fully aware of the potential for RF exposure occupational training and they can exercise control over their exposure that is within the occupational/controlled limits.

CONCLUSIONS

Based on calculations, the proposed WCF will comply with current FCC and county guidelines for human exposure to radiofrequency electromagnetic fields.

All representations contained herein are true to the best of my knowledge.

EXHIBITS

- MPE Calculations
- Antenna Spec Sheets
- RF Data Sheet
- WCF Location Map

B. J. THOMAS
STATE OF WASHINGTON
37041
REGISTERED
PROFESSIONAL ENGINEER

2/22/11

SB13
Carillon Point
MPE Calculations

Effective tower height assumes a person 6 ft tall.

65	height (ft)

5.01E-03	
0.005011	max power density in mW/cm^2
0.8838%	percentage of standard

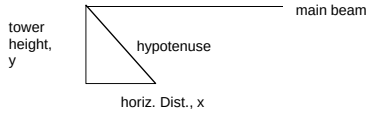

Note: 0.567 mW/cm^2 is 100% of allowable standard for lowest frequency

radiation center (feet), y	effective tower height (feet), y	minor lobe angle	dB below main lobe	horiz. dist. x	hyptonuse length (feet)	hypotenuse length (km)	hypotenuse length (cm)	ERP main lobe (watts)	ERP main lobe (dBm)	minor lobe ERP (dBm)	minor lobe EIRP (dBm)	minor lobe EIRP (mW)	Power at point x at ground level mW/cm^2
GSM 850													
65	59	90	20	0.000	59.000	0.018	1798.320	385	55.85	35.85	38.01	6330.83	6.23E-04
GSM 1900													
65	59	90	20	0.000	59.000	0.018	1798.320	626	57.97	37.97	40.13	10293.77	1.01E-03
UMTS 850													
65	59	90	20	0.000	59.000	0.018	1798.320	363	55.60	35.60	37.76	5969.07	5.88E-04
UMTS 1900													
65	59	90	20	0.000	59.000	0.018	1798.320	503	57.02	37.02	39.18	8271.19	8.14E-04
UMTS 1900-1													
65	59	90	20	0.000	59.000	0.018	1798.320	503	57.02	37.02	39.18	8271.19	8.14E-04
LTE 700													
65	59	90	20	0.000	59.000	0.018	1798.320	716	58.55	38.55	40.71	11773.70	1.16E-03
												TOTAL	**5.01E-03**

KATHREIN
SCALA DIVISION

800 10764
700 MHz Dual Band 4', 65 Degree Antenna RET

Kathrein's X-polarized antennas are designed for use in digital polarization diversity systems.

- X-polarized (+45° and -45°).
- UV resistant fiberglass radomes.
- Wideband vector dipole technology.
- DC Grounded metallic parts for impulse suppression.
- RET motor housed inside the radome and field replaceable.

698–894 MHz

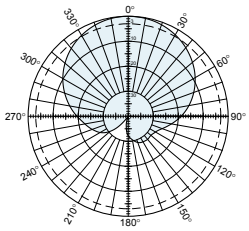

Horizontal pattern
±45°- polarization

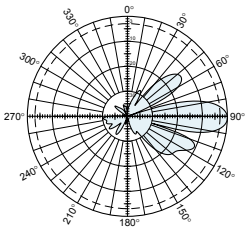

Vertical pattern
±45°- polarization
0°–16° electrical downtilt

1710–2170 MHz

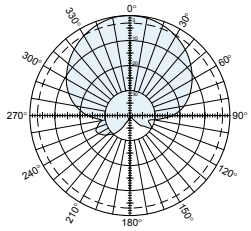

Horizontal pattern
±45°- polarization

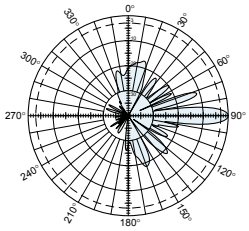

Vertical pattern
±45°- polarization
0°–10° electrical downtilt

General specifications:

Frequency range	698–894 MHz // 1710–2170 MHz
Impedance	50 ohms
VSWR	<1.5:1
Intermodulation (2x20w)	IM3:< -150 dBc
Polarization	+45° and -45°
Connector	4 x 7-16 DIN female (long neck)
Isolation	intrasystem >30 dB // intersystem >35 dB
See reverse for order information.	

IRT specifications:

Logical interface ex factory[1)]	AISG 1.1
Protocols	AISG 1.1 and 3GPP/AISG 2.0 compliant
Hardware interface[2)]	2 x 8pin connector acc. IEC 60130-9; according to AISG: – RCUin (male): Control / Daisy chain in – RCUout (female): Daisy chain out
Power supply	10–30 V
Power Consumption	<1 W (standby); <8.5 W (motor activated)
Adjustment time (full range)	40 seconds
Adjustment cycles	>50,000
Certification	FCC 15.107 Class B Computing Devices

1) The protocol of the logical interface can be switched from AISG 1.1 to 3GPP/AISG 2.0 and vice versa with a vendor specific command.

Please note: If the Primary of the RETsystem doesn't support the standard of the 'logical interface ex factory', the RCU must be switched to the appropriate standard of the Primary before installation. Please contact Kathrein for further information.

2) The tightning torque for fixing the connector must be 0.5 – 1.0 Nm ('hand-tightened'). The connector should be tightened by hand only!

Specifications:

	698–806 MHz	824–894 MHz	1710–1755 MHz	1850–1990 MHz	2110–2170 MHz
Gain	14.3 dBi	14.8 dBi	17.3 dBi	17.5 dBi	17.3 dBi
Front-to-back ratio	>30 dB (co-polar) 32 dB (average)	>27 dB (co-polar) 30 dB (average)	>30 dB (co-polar) 34 dB (average)	>30 dB (co-polar) 34 dB (average)	>30 dB (co-polar) 34 dB (average)
Maximum input power per input	500 watts (at 50°C)	500 watts (at 50°C)	300 watts (at 50°C)	300 watts (at 50°C)	300 watts (at 50°C)
+45° and -45° polarization horizontal beamwidth	68° (half-power)	65° (half-power)	61° (half-power)	60° (half-power)	61° (half-power)
+45° and -45° polarization vertical beamwidth	15° (half-power)	13.5° (half-power)	7.5° (half-power)	7.5° (half-power)	7.5° (half-power)
Electrical downtilt continuously adjustable	0°–16°	0°–16°	0°–10°	0°–10°	0°–10°
Min sidelobe suppression for first sidelobe above main beam average	0° 8° 16° T 17 16 16 dB 19 19 18 dB	0° 8° 16° T 18 16 16 dB 22 20 20 dB	0° 5° 10° T 18 18 17 dB 20 20 20 dB	0° 5° 10° T 18 18 17 dB 20 20 20 dB	0° 5° 10° T 18 18 17 dB 20 20 20 dB
Cross polar ratio Main direction 0° Sector ±60°	 25 dB (typical) >10 dB, 15 dB (avg)	 25 dB (typical) >8 dB, 14 dB (avg)	 25 dB (typical) >8 dB, 14 dB (avg)	 25 dB (typical) >10 dB, 16 dB (avg)	 25 dB (typical) >8 dB, 14 dB (avg)
Tracking	1.5 db	1.5 db	2.0 db	1.0 db	2.0 db
Squint	±2.5°	±4°	±4°	±1.5°	±4°

11223-C
936.3871/a

Kathrein Inc., Scala Division Post Office Box 4580 Medford, OR 97501 (USA) Phone: (541) 779-6500 Fax: (541) 779-3991
Email: communications@kathrein.com Internet: www.kathrein-scala.com

KATHREIN
SCALA DIVISION

800 10764

700 MHz Dual Band 4', 65 Degree Antenna RET

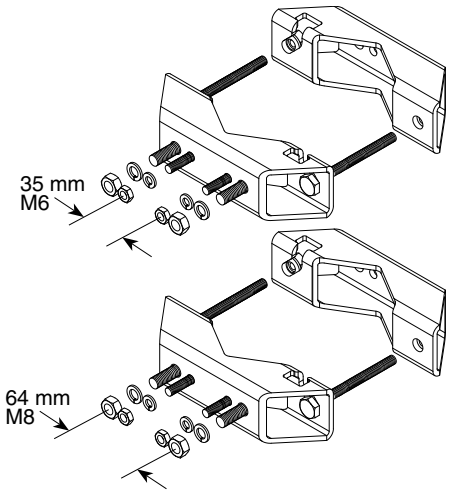

Mounting Brackets

for use with 2-point mount antennas
Mast dia. 2–4.5 inches (50–115 mm)
Weight: 4 lb (1.8 kg)

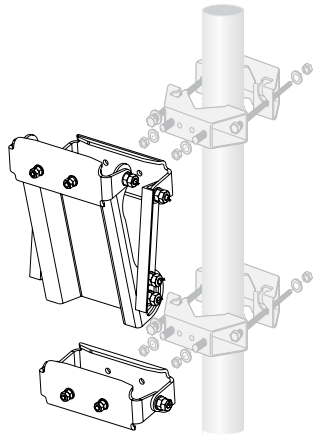

Mechanical Tilt Brackets

for use with 2-point mount antennas
Weight: 13 lb (5.9 kg)
(Model 850 10007)

Mechanical specifications:

Weight	40.8 lb (18.5 kg)
Dimensions	55.2 x 11.8 x 6 inches (1403 x 300 x 152 mm)
Wind load Front/Side/Rear	at 93 mph (150kph) 156 lbf / 59 lbf / 160 lbf (690 N) / (260 N) / (710 N)
Wind survival rating*	150 mph (240 kph)
Shipping dimensions	64.8 x 12.6 x 7.5 inches (1646 x 322 x 190 mm)
Shipping weight	50 lb (22.7 kg)
Mounting	Mounting hardware included for 2 to 4.6 inch (50 to 115 mm) OD masts.

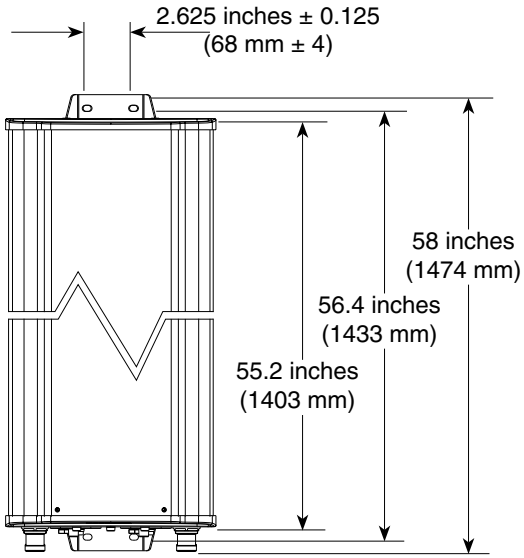

KATHREIN 860 10149

Tested To Comply With FCC Standards

This device complies with part 15 of the FCC Rules. Operation is subject to the following two conditions: (1) This device may not cause harmful interference, and (2) this device must accept any interference received, including interference that may cause undesired operation.

Note: Refer to part number 860 10149 for the specifications of the remote control actuator.

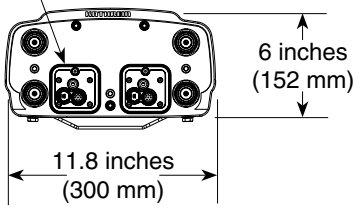

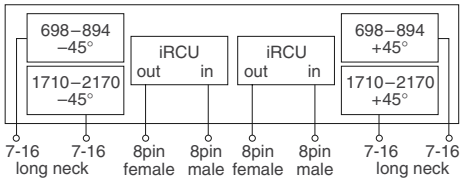

Order Information:

Model	Description
800 10764	Dualband antenna with mounting bracket 0°–16° // 0°–10° electrical downtilt
800 10764 K	Dualband antenna with mounting bracket and mechanical tilt bracket 0°–16° // 0°–10° electrical downtilt

* Mechanical design is based on environmental conditions as stipulated in TIA-222-G-2 (December 2009) and/or ETS 300 019-1-4 which include the static mechanical load imposed on an antenna by wind at maximum velocity. See the Engineering Section of the catalog for further details.

All specifications are subject to change without notice. The latest specifications are available at www.kathrein-scala.com.

Kathrein Inc., Scala Division Post Office Box 4580 Medford, OR 97501 (USA) Phone: (541) 779-6500 Fax: (541) 779-3991
Email: communications@kathrein.com Internet: www.kathrein-scala.com

KMW Communications

Base Station Antennas

For Mobile Communications

AM-X-CD-16-65-00T-RET (54”)

Dual Band Electrical DownTilt Antenna

698 ~ 894MHz, X-pol., H65 ° / V15 °
1710 ~ 2170MHz, X-pol., H65 ° / V7.5 °

Electrical Specification

Frequency Range		698 ~ 894 MHz	1710 ~ 2170 MHz
Gain		14.0 dBi	16.5.0 dBi
Beamwidth	**Horizontal**	65°	65°
	Vertical	15°	7.5°
Impedance		50Ω	50Ω
VSWR		≤1.5:1	≤1.5:1
Polarization		Dual, Slant ±45°	Dual, Slant ±45°
Front-to-Back Ratio		≥30 dB	≥30 dB
Electrical Downtilt Range		0° ~ 8°	0° ~ 8°
Passive Intermediation		≤ -150 dBc	≤ -150 dBc
Input Maximum CW Power		500W	250W

Specifications are subject to change.

Mechanical Specification

Dimension (W×D×H)	12.6×7.87×54 inches
Weight (Without clamp)	15.0 kg (33.0 lb)
Connector	4 x 7/16 DIN(F),Bottom
Max Wind Speed	60 m/s

AM-X-CD-16-65-00T-RET (54”)

Dual Band Electrical Down Tilt Antenna

[700MHz_Band Pattern]

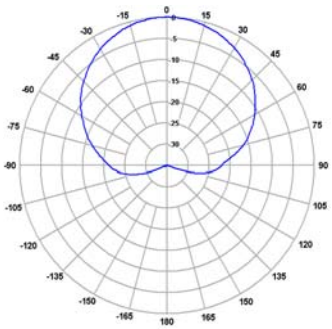

Horizontal Pattern

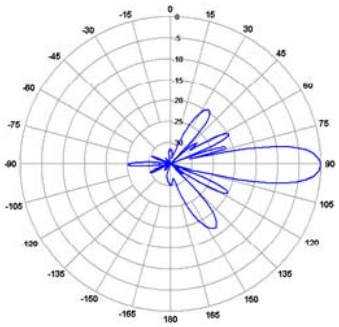

Vertical Pattern(Downtilt 0˚)

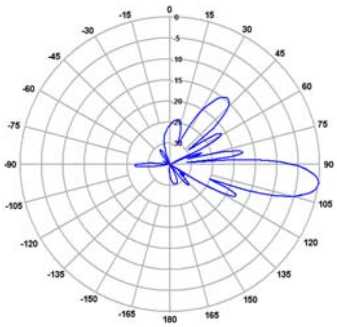

Vertical Pattern(Downtilt 8˚)

[AWS_Band Pattern]

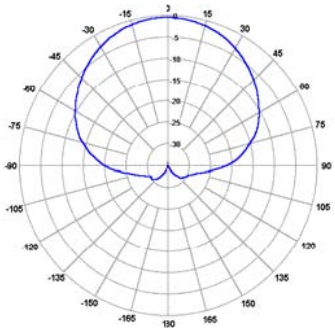

Horizontal Pattern

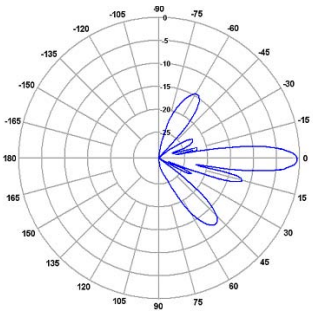

Vertical Pattern(Downtilt 0˚)

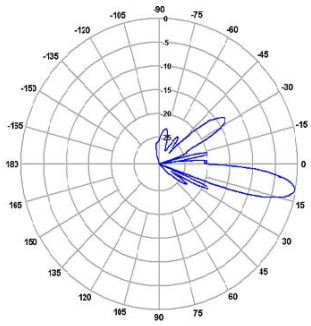

Vertical Pattern(Downtilt 8˚)

P65-17-XLH-RR | Dual Broadband Antennas

POLARIZATION: Dual linear ±45°
FREQUENCY (MHz): 698-894, 1710-2170
HORIZONTAL BEAM WIDTH (°): 65, 65
GAIN (dBi/dBd): 17.2/15.1 17.5/15.4
TILT: 0-6, 0-10
LENGTH: 96”

ELECTRICAL SPECIFICATIONS*

Frequency range (MHz)	698-894		1710-2170		
Frequency band (MHz)	698-806	806-894	1710-1880	1850-1990	1900-2170
Gain (dBi/dBd)	16.4/14.3	17.2/15.1	16.9/14.8	17.2/15.1	17.5/15.4
Polarization	Dual Linear +/- 45		Dual Linear +/- 45		
Nominal Impedance (Ω)	50		50		
VSWR	< 1.5:1		< 1.5:1		
Horizontal beam width, -3 dB (°)	70	63	60	63	60
Vertical beam width, -3 dB (°)	8.4		6.5		
Electrical down tilt (°)	0 to 6		0 to 10		
Side lobe suppression, vertical 1st upper (dB)	> 16		> 16		
Isolation between inputs (dB)	> 30		> 30		
Inter band Isolation (dB)	> 40				
Tracking, horizontal plane ±60° (dB)	< 2		< 2		
Vertical beam squint (°)	< 0.5		< 0.5		
Front to back ratio (dB) 180°±30° copolar	> 25		> 30		
Front to back ratio (dB) 180°±30° total power	> 22		> 25		
Cross polar discrimination (XPD) 0° (dB)	> 15		> 15		
Cross polar discrimination (XPD) ±60° (dB)	10		10		
IM3, 2xTx@43dBm (dBc)	<-153		<-153		
Power handling, average per input (W)	500		300		
Power handling, average total (W)	1000		600		

MECHANICAL SPECIFICATIONS*

Connector	4 X 7/16 DIN Female
Connector position	Bottom
Dimensions, HxWxD, in (mm)	96” x 12” x 6” (2438 x 305 x 152)
Mounting	Pre-mounted Tilt Brackets
Weight, with brackets, lbs (kg)	70 (32)
Weight, without brackets, lbs (kg)	59 (27)
Wind load, frontal/lateral/rear side 42 m/s Cd=1.0 (N)	1840
Maximum operational wind speed, mph (m/s)	100 (45)
Survival wind speed, mph (m/s)	150 (67)
Lightning protection	DC Ground
Operating Temperature	
Radome material	PVC
Packet size, HxWxD, in (mm)	107” x 16” x 10” (2725 x 400 x 255)
Radome colour	Light Grey
Shipping weight, lbs (kg)	81 (37)
RET	iRET AISGv1.1, MET and AISGv2.0 Available
Brackets	7256.00, 7454.00

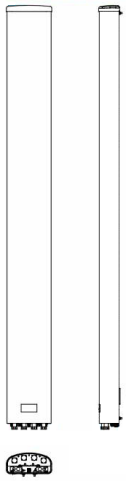

*All specifications subject to change without notice. Please contact your Powerwave representative for complete performance data.

ANTENNA PATTERNS*

For detailed patterns visit http://www.powerwave.com/rpa/.

Updated: 2010-12-05

© Copyright 2011 Powerwave Technologies, Inc. All rights reserved.
All specifications are subject to change without notice. Please contact your Powerwave representative for complete performance data.

RF Data Sheet

Site Information				Release Information		
Site ID	**SB13**			Date Issued	**01/19/11**	
Site Name	**Carillon Point**			Revision Level	**1.0**	
Project	**LTE PICD Wave2**			**Contact Details**		
GSM Equipment	**UltraSite**			RF Design Engineer	**Lukasz Grabarski**	phone **(425) 698-8272**
UMTS Equipment	**Indoor 1900 3 x 1 w PA Model (Qty: 1)**			RF Performance Engineer	**MD Hasan**	phone **(425) 753-2515**
NodeB# 1-4 proposed (Name / IUB# / #UCU/ [#RAX/#TX])				Zone	**16E**	
				GSM BSC	**TACMBSC01**	
				Location Information		
				Structure	**Wall Mounted**	
Latitude (decimal) / (degrees)	47.65527778		47° 39' 19"	Tower Owner	**CARILLON PROPERTIES, a Washignton general partnership.**	
Longitude (decimal) / (degrees)	-122.2061111		-122° 12' 22"	Colocation Partners	**None**	
County	**King**			Tier of our ant		
Street Address	**2000 Carillon Point**			Business on site	**4 story bldg**	
City	**Kirkland**	State	**WA**	Highest Point w/o ant	**70**	
Zip Code	**98033-**	Disaster Recovery	**Tier 3**	Highest Point w/ ant	**70**	

Existing Configuration

X	GSM 850	GSM 1900	UMTS 850	UMTS 1900	UMTS 1900_1	TDMA 850 (Off)	LTE 700 (Off)
Number of Antennas	1		1			1	
Antenna Port Number	8c+8d	8a+8b	9c+9d	9a+9b	9a+9b	7c+7d	
Antenna Vendor	Kathrein		Kathrein			PowerWave	
Antenna Model	742-264		742-264			7263	
Antenna (Band / Pol)	DBDP		DBDP			SBDP	
Antenna HBW	68		68			65	
Azimuth	120		140			115	
Electrical Tilt	0	0	3	0	0	0	
Mechanical Tilt	-3		-3			0	
RET	Yes	Yes	Yes	Yes	Yes	No	
Antenna Dimensions (inches) (H,W,D)	51.8x10.3x5.5	51.8x10.3x5.5	51.8x10.3x5.5	51.8x10.3x5.5	51.8x10.3x5.5	52x10.4x2	
Antenna Weight (lbs)	36.4	36.4	36.4	36.4	36.4	16.5	
Rad Center (ft)	65	65	65	65	65	65	
Number of Feeders	2		2			2	
Feeder Type	LDF5 7/8_850		LDF5 7/8_850			Comm 1-5/8_850	
Feeder Length	190		190			100	
Jumper Type							
Number of TMA		2	0	2	2	0	
TMA Type	None	Nokia MHA CS72993.08	None	LGP 21401	LGP 21401	None	
TMA DIM (Weight(lb),length,height)	-	-	-	-	-	-	
Diplexed	Yes - G8 G9		Yes - U8 U9 U9_1			No	
Antenna (Sharing / Type)	No	No	No	No	No	No	
MCPA	No	No	No	No	No	No	
BCF Name	STTLWASB13	STTLWASB13	WASBU1522	WASBU1522	WASBU1522		
Sector Name	STTLWASB13X	STTLWASB13A	WASBU1522X	WASBU1522A	WASBU1522D		
BSC/RNC	TACMBSC01	TACMBSC01	TACNWADNCRAR11	TACNWADNCRAR11	TACNWADNCRAR11		
CellID	21401	1401	15221	15227	15224		
LAC	52020	52020	42994	42994	42994		
TRX Count	2	2	1	1	1	2	
ERP (dBm / Watts)	55.21 [dBm] / 331 [W]	56.62 [dBm] / 459 [W]	55.11 [dBm] / 324 [W]	56.52 [dBm] / 448 [W]	56.52 [dBm] / 448 [W]	51.87 [dBm] / 153 [W]	

Y	GSM 850	GSM 1900	UMTS 850	UMTS 1900	UMTS 1900_1	TDMA 850 (Off)	LTE 700 (Off)
Number of Antennas	1	1	1			1	
Antenna Port Number	16a+16b	15a+15b	14c+14d	14a+14b	14a+14b	13c+13d	
Antenna Vendor	Kathrein	PowerWave	Kathrein			Kathrein	
Antenna Model	739 684	7721	742-264			739 684	
Antenna (Band / Pol)	SBDP	SBDP	DBDP			SBDP	
Antenna HBW	65	65	68			65	
Azimuth	210	210	210			235	
Electrical Tilt	7	3	8	3	3	0	
Mechanical Tilt	0	0	0			0	
RET	Yes	Yes	Yes	Yes	Yes	No	
Antenna Dimensions (inches) (H,W,D)	51x10.3x4.5	55x6.6x3.5	51.8x10.3x5.5	51.8x10.3x5.5	51.8x10.3x5.5	51x10.3x4.5	
Antenna Weight (lbs)	30.8	14.3	36.4	36.4	36.4	30.8	
Rad Center (ft)	65	65	65	65	65	65	
Number of Feeders	2		2			2	
Feeder Type	LDF5 7/8_850		LDF5 7/8_850			Comm 1-5/8_850	
Feeder Length	190		190			100	
Jumper Type							
Number of TMA		2	0	2	2	0	
TMA Type	None	Nokia MHA CS72993.08	None	LGP 21401	LGP 21401	None	
TMA DIM (Weight(lb),length,height)	-	-	-	-	-	-	
Diplexed	Yes - G8 G9		Yes - U8 U9 U9_1			No	
Antenna (Sharing / Type)	No	No	No	No	No	No	
MCPA	No	No	No	No	No	No	
BCF Name	STTLWASB13_2	STTLWASB13_2	WASBU1522	WASBU1522	WASBU1522		
Sector Name	STTLWASB13Y	STTLWASB13B	WASBU1522Y	WASBU1522B	WASBU1522E		
BSC/RNC	TACMBSC01	TACMBSC01	TACNWADNCRAR11	TACNWADNCRAR11	TACNWADNCRAR11		
CellID	21402	1402	15222	15228	15225		
LAC	52020	52020	42994	42994	42994		
TRX Count	2	2	1	1	1	2	
ERP (dBm / Watts)	55.86 [dBm] / 385 [W]	57.97 [dBm] / 626 [W]	55.61 [dBm] / 363 [W]	57.02 [dBm] / 503 [W]	57.02 [dBm] / 503 [W]	51.47 [dBm] / 140 [W]	

Z	GSM 850	GSM 1900	UMTS 850	UMTS 1900	UMTS 1900_1	TDMA 850 (Off)	LTE 700 (Off)
Number of Antennas	1		1			1	
Antenna Port Number	2c+2d	2a+2b	3c+3d	3a+3b	3a+3b	1c+1d	
Antenna Vendor	Kathrein		Kathrein			PowerWave	
Antenna Model	742-264		742-264			7263	
Antenna (Band / Pol)	DBDP		DBDP			SBDP	
Antenna HBW	68		68			65	
Azimuth	330		350			355	
Electrical Tilt	8	4	6	2	2	0	
Mechanical Tilt	0		4			0	
RET	Yes	Yes	Yes	Yes	Yes	No	
Antenna Dimensions (inches) (H,W,D)	51.8x10.3x5.5	51.8x10.3x5.5	51.8x10.3x5.5	51.8x10.3x5.5	51.8x10.3x5.5	52x10.4x2	
Antenna Weight (lbs)	36.4	36.4	36.4	36.4	36.4	16.5	
Rad Center (ft)	65	65	65	65	65	65	
Number of Feeders	2		2			2	
Feeder Type	LDF5 7/8_850		LDF5 7/8_850			Comm 1-5/8_850	
Feeder Length	190		190			100	
Jumper Type							
Number of TMA		2	0	2	2	0	
TMA Type	None	Nokia MHA CS72993.08	None	LGP 21401	LGP 21401	None	
TMA DIM (Weight(lb),length,height)	-	-	-	-	-	-	
Diplexed	Yes - G8 G9		Yes - U8 U9 U9_1			No	
Antenna (Sharing / Type)	No	No	No	No	No	No	
MCPA	No	No	No	No	No	No	
BCF Name	STTLWASB13_2	STTLWASB13_2	WASBU1522	WASBU1522	WASBU1522		
Sector Name	STTLWASB13Z	STTLWASB13C	WASBU1522Z	WASBU1522C	WASBU1522F		
BSC/RNC	TACMBSC01	TACMBSC01	TACNWADNCRAR11	TACNWADNCRAR11	TACNWADNCRAR11		
CellID	21403	1403	15223	15229	15226		
LAC	52020	52020	42994	42994	42994		
TRX Count	3	2	1	1	1	2	
ERP (dBm / Watts)	51.71 [dBm] / 148 [W]	56.62 [dBm] / 459 [W]	55.21 [dBm] / 331 [W]	56.62 [dBm] / 459 [W]	56.62 [dBm] / 459 [W]	51.87 [dBm] / 153 [W]	

Planned Configuration

X	GSM 850	GSM 1900	UMTS 850	UMTS 1900	UMTS 1900_1	TDMA 850 (Off)	LTE 700
Number of Antennas	1		1				1
Antenna Port Number	8c+8d	8a+8b	9c+9d	9a+9b	9a+9b		7c+7d
Antenna Vendor	Kathrein		Kathrein				KMW
Antenna Model	742-264		742-264				AM-X-CD-16-65-00T-RET_725MHz
Antenna (Band / Pol)	DBDP		DBDP				DBDP
Antenna HBW	68		68				65
Azimuth	140		140				120
Electrical Tilt	0	0	3	0	0		3
Mechanical Tilt	-3		-3				0
RET	Yes	Yes	Yes	Yes	Yes		Yes
Antenna Dimensions (inches) (H,W,D)	51.8x10.3x5.5	51.8x10.3x5.5	51.8x10.3x5.5	51.8x10.3x5.5	51.8x10.3x5.5		72x11.8x5.9
Antenna Weight (lbs)	36.4	36.4	36.4	36.4	36.4		48.5
Rad Center (ft)	65	65	65	65	65		65
Number of Feeders	2		2				0
Feeder Type	LDF5 7/8_850		LDF5 7/8_850				Fiber
Feeder Length	190		190				189.95
Jumper Type							
Number of TMA		2	0	2	2		0
TMA Type	None	Nokia MHA CS72993.08	None	LGP 21401	LGP 21401		
TMA DIM (Weight(lb),length,height)	-	-	-	-	-		-
Diplexed	Yes - G8 G9		Yes - U8 U9 U9_1				No
Antenna (Sharing / Type)	No	No	No	No	No		No
MCPA	No	No	No	No	No		
BCF Name	STTLWASB13	STTLWASB13	WASBU1522	WASBU1522	WASBU1522		
Sector Name	STTLWASB13X	STTLWASB13A	WASBU1522X	WASBU1522A	WASBU1522D		WAL01522_7A_1
BSC/RNC	TACMBSC01	TACMBSC01	TACNWADNCRAR11	TACNWADNCRAR11	TACNWADNCRAR11		
CellID	21401	1401	15221	15227	15224		
LAC	52020	52020	42994	42994	42994		
TRX Count	2	2	1	1	1		1
ERP (dBm / Watts)	55.21 [dBm] / 331 [W]	56.62 [dBm] / 459 [W]	55.11 [dBm] / 324 [W]	56.52 [dBm] / 448 [W]	56.52 [dBm] / 448 [W]		57.75 [dBm] / 595 [W]

Y	GSM 850	GSM 1900	UMTS 850	UMTS 1900	UMTS 1900_1	TDMA 850 (Off)	LTE 700
Number of Antennas	1	1	1				1
Antenna Port Number	16a+16b	15a+15b	14c+14d	14a+14b	14a+14b		13c+13d
Antenna Vendor	Kathrein	PowerWave	Kathrein				PowerWave
Antenna Model	739 684	7721	742-264				P65-17-XLH-RR_716MHz
Antenna (Band / Pol)	SBDP	SBDP	DBDP				DBDP
Antenna HBW	65	65	68				65
Azimuth	210	210	210				210
Electrical Tilt	7	3	8	3	3		4
Mechanical Tilt	0	0	0				2
RET	Yes	Yes	Yes	Yes	Yes		Yes
Antenna Dimensions (inches) (H,W,D)	51x10.3x4.5	55x6.6x3.5	51.8x10.3x5.5	51.8x10.3x5.5	51.8x10.3x5.5		96x12x6
Antenna Weight (lbs)	30.8	14.3	36.4	36.4	36.4		70
Rad Center (ft)	65	65	65	65	65		65
Number of Feeders	2		2				0
Feeder Type	LDF5 7/8_850		LDF5 7/8_850				Fiber
Feeder Length	190		190				189.95
Jumper Type							
Number of TMA		2	0	2	2		0
TMA Type	None	Nokia MHA CS72993.08	None	LGP 21401	LGP 21401		
TMA DIM (Weight(lb),length,height)	-	-	-	-	-		-
Diplexed	Yes - G8 G9		Yes - U8 U9 U9_1				No
Antenna (Sharing / Type)	No	No	No	No	No		No
MCPA	No	No	No	No	No		
BCF Name	STTLWASB13_2	STTLWASB13_2	WASBU1522	WASBU1522	WASBU1522		
Sector Name	STTLWASB13Y	STTLWASB13B	WASBU1522Y	WASBU1522B	WASBU1522E		WAL01522_7B_1
BSC/RNC	TACMBSC01	TACMBSC01	TACNWADNCRAR11	TACNWADNCRAR11	TACNWADNCRAR11		
CellID	21402	1402	15222	15228	15225		
LAC	52020	52020	42994	42994	42994		
TRX Count	2	2	1	1	1		1
ERP (dBm / Watts)	55.86 [dBm] / 385 [W]	57.97 [dBm] / 626 [W]	55.61 [dBm] / 363 [W]	57.02 [dBm] / 503 [W]	57.02 [dBm] / 503 [W]		58.55 [dBm] / 716 [W]

Z	GSM 850	GSM 1900	UMTS 850	UMTS 1900	UMTS 1900_1	TDMA 850 (Off)	LTE 700
Number of Antennas	1		1				1
Antenna Port Number	2c+2d	2a+2b	3c+3d	3a+3b	3a+3b		1c+1d
Antenna Vendor	Kathrein		Kathrein				Kathrein
Antenna Model	742-264		742-264				80010764_716MHz
Antenna (Band / Pol)	DBDP		DBDP				DBDP
Antenna HBW	68		68				68
Azimuth	350		350				10
Electrical Tilt	8	4	6	2	2		12
Mechanical Tilt	0		4				0
RET	Yes	Yes	Yes	Yes	Yes		Yes
Antenna Dimensions (inches) (H,W,D)	51.8x10.3x5.5	51.8x10.3x5.5	51.8x10.3x5.5	51.8x10.3x5.5	51.8x10.3x5.5		58x11.8x6
Antenna Weight (lbs)	36.4	36.4	36.4	36.4	36.4		40.8
Rad Center (ft)	65	65	65	65	65		65
Number of Feeders	2		2				0
Feeder Type	LDF5 7/8_850		LDF5 7/8_850				Fiber
Feeder Length	190		190				189.95
Jumper Type							
Number of TMA		2	0	2	2		0
TMA Type	None	Nokia MHA CS72993.08	None	LGP 21401	LGP 21401		
TMA DIM (Weight(lb),length,height)	-	-	-	-	-		-
Diplexed	Yes - G8 G9		Yes - U8 U9 U9_1				No
Antenna (Sharing / Type)	No	No	No	No	No		No
MCPA	No	No	No	No	No		
BCF Name	STTLWASB13_2	STTLWASB13_2	WASBU1522	WASBU1522	WASBU1522		
Sector Name	STTLWASB13Z	STTLWASB13C	WASBU1522Z	WASBU1522C	WASBU1522F		WAL01522_7C_1
BSC/RNC	TACMBSC01	TACMBSC01	TACNWADNCRAR11	TACNWADNCRAR11	TACNWADNCRAR11		
CellID	21403	1403	15223	15229	15226		
LAC	52020	52020	42994	42994	42994		
TRX Count	3	2	1	1	1		1
ERP (dBm / Watts)	51.71 [dBm] / 148 [W]	56.62 [dBm] / 459 [W]	55.21 [dBm] / 331 [W]	56.62 [dBm] / 459 [W]	56.62 [dBm] / 459 [W]		56.45 [dBm] / 441 [W]

SB13 CARILLON POINT

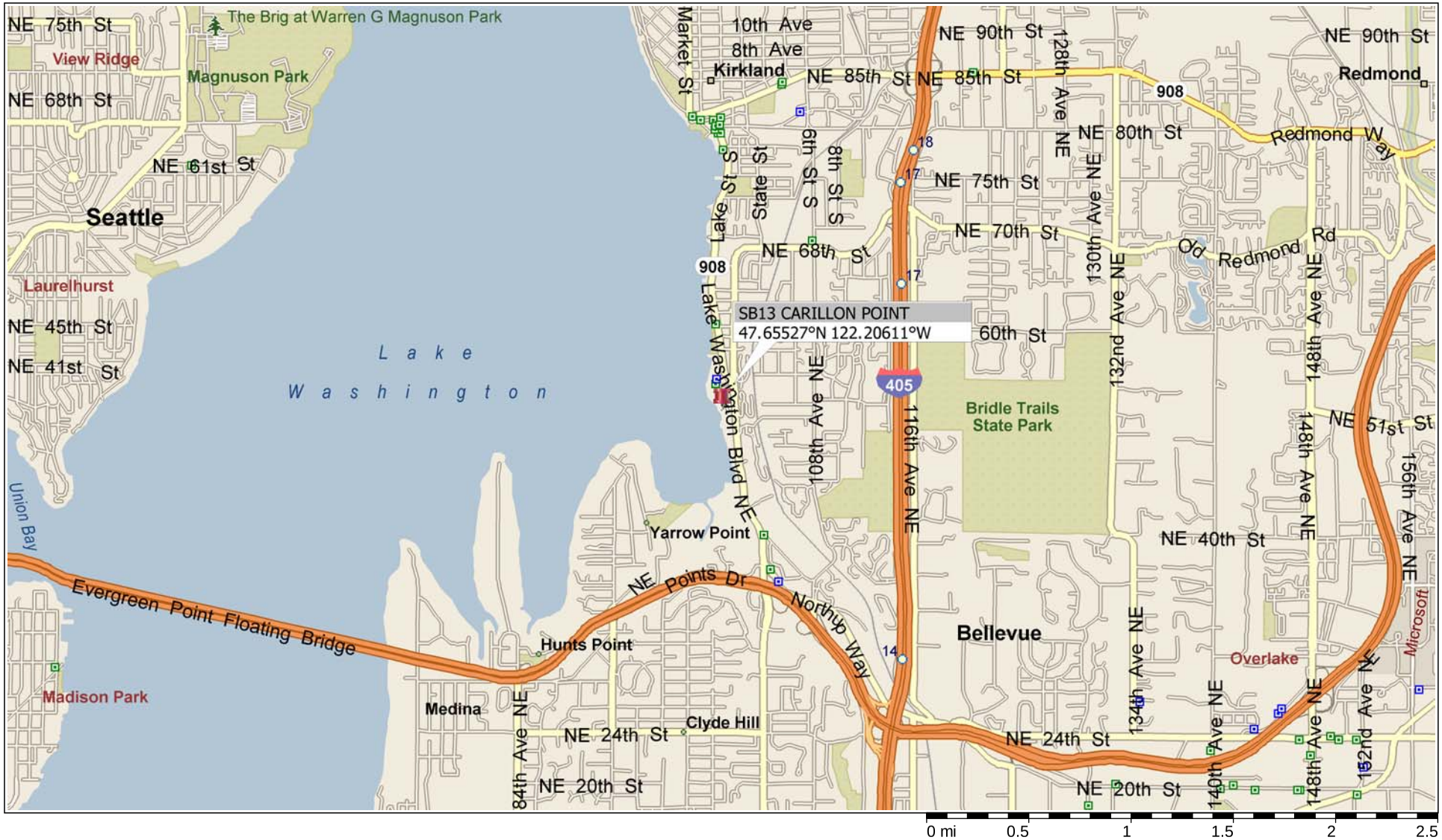

Copyright © and (P) 1988–2009 Microsoft Corporation and/or its suppliers. All rights reserved. http://www.microsoft.com/streets/
Certain mapping and direction data © 2009 NAVTEQ. All rights reserved. The Data for areas of Canada includes information taken with permission from Canadian authorities, including: © Her Majesty the Queen in Right of Canada, © Queen's Printer for Ontario. NAVTEQ and NAVTEQ ON BOARD are trademarks of NAVTEQ. © 2009 Tele Atlas North America, Inc. All rights reserved. Tele Atlas and Tele Atlas North America are trademarks of Tele Atlas, Inc. © 2009 by Applied Geographic Systems. All rights reserved.