Attachment 2

SEATTLE CITY LIGHT (SCL) SHALL INSTALL & MAINTAIN THE TOWER EXTENSION (IF ANY) & PROPOSED ANTENNAS / CABLES TO THE TOWER.

NOTE - SCL TOWERS

clearwire

RECEIVED
AUG 14 2009
AM PM
PLANNING DEPARTMENT
BY

SITE NAME:
CENTRAL PARK

SITE NUMBER:
WA-SEA522-B

SHEET NUMBER:	DESCRIPTION:
SEA522-B-T01	TITLE SHEET
SEA522-B-N01	GENERAL NOTES
SEA522-B-C01	OVERALL SITE PLAN
SEA522-B-C02	COMPOUND PLAN, SOUTH TOWER ELEVATION
SEA522-B-C03	ANTENNA DETAILS, CONSTRUCTION DETAILS
SEA522-B-S01	CABLE ROUTING DETAIL, STRUCTURAL DETAILS
SEA522-B-S02	CONSTRUCTION DETAILS, SCL TOWERS
SEA522-B-E01	GROUNDING DIAGRAM

SHEET INDEX

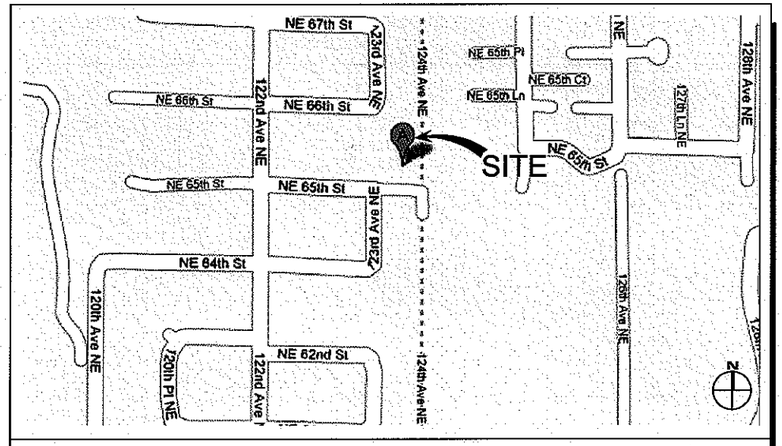

VICINITY MAP — SCALE: NTS

PROJECT DESCRIPTION:
CLEARWIRE U.S., LLC PROPOSES TO MODIFY AN UNSTAFFED RADIO TELECOMMUNICATIONS FACILITY CONSISTING OF REPLACEMENT OF (3) PANEL ANTENNAS, AND THE REPLACEMENT OF A 2' DISH WITH A 3' DISH AND (3) BTS UNITS TO AN EXISTING 110'-6" SCL TRANSMISSION TOWER FOR RADIO COMMUNICATIONS.

SITE ADDRESS:
12314 NE 65TH STREET
KIRKLAND, WA 98033

TOWER OWNER:
SEATTLE CITY LIGHT REAL ESTATE SERVICES
PO BOX 34023
SEATTLE, WA 98124-4023
TEL: 360.691.6326
CONTACT: GRACE HARTLEY

APPLICANT:
CLEARWIRE U.S., LLC
4400 CARILLON POINT
KIRKLAND, WA 98033

CURRENT USE:
UTILITY TOWER

PROPOSED USE:
UTILITY TOWER/ PERSONAL WIRELESS SERVICE FACILITY

PROPERTY OWNER:
GLENN W. WHARTON
PO BOX 215 MAIN STREET 745
KIRKLAND, WA 98033
TEL: 206.200.3983
CONTACT: GLENN W. WHARTON

PARCEL NUMBER:
1087700035

ZONING:
RS 8.5

JURISDICTION:
CITY OF KIRKLAND

PROJECT SUMMARY

DOCUMENT REVIEW

LANDLORD		DATE
SITE ACQUISITION		DATE
ZONING		DATE
RF ENGINEER		DATE
PROJECT MANAGER		DATE
CONSTR. MANAGER		DATE

APPROVALS

POWER COMPANY: PSE
TEL:

TELEPHONE COMPANY: VERIZON
TEL:

DIG ALERT; CALL BEFORE YOU DIG:
CALL FOR UNDERGROUND UTILITIES LOCATION PRIOR TO ANY EXCAVATION, PER:
WASHINGTON LAW: CHAPTER 19.122 RCW - UNDERGROUND UTILITIES
CALL: 800.424.5555

UTILITY CONTACTS

(FROM KIRKLAND, WA CLEARWIRE OFFICE)
DEPART 5808 LAKE WASHINGTON BOULEVARD NE, KIRKLAND, WA 98033; ON NE 68TH STREET, TURN LEFT (NORTH) ONTO LAKEVIEW DRIVE; ROAD NAME CHANGES TO NE 68TH STREET; ROAD NAME CHANGES TO NE 72ND PLACE; ROAD NAME CHANGES TO NE 70TH PLACE; ROAD NAME CHANGES TO NE 70TH STREET; TURN RIGHT (SOUTH) ONTO 122ND AVENUE NE; TURN LEFT (EAST) ONTO NE 65TH STREET; ARRIVE AT 12314 NE 65TH STREET, KIRKLAND, WA 98033. THE SITE IS ON A SCL TRANSMISSION TOWER / SITE SEA-522-B.

DRIVING DIRECTIONS

THE INFORMATION CONTAINED IN THIS SET OF DRAWINGS IS PROPRIETARY BY NATURE, ANY USE OR DISCLOSURE OTHER THAN THAT WHICH RELATES TO CLEARWIRE SERVICE IS STRICTLY PROHIBITED.

PROPRIETARY NOTE

LATITUDE/LONGITUDE:
LAT: 47°39'51.62"N
LONG: 122°10'28.61"W

ELEVATION:
513.8' (±) AMSL

SITE GPS COORDINATES

ARCHITECT
LDC, INC.
14201 NE 200TH STREET, #100
WOODINVILLE, WA 98072
TEL: 425.806.1869
FAX: 425.482.2893
CONTACT: RICK MATTESON

CONSTRUCTION
CLEARWIRE
4400 CARILLON POINT
KIRKLAND, WA 98033
TEL:
FAX:
CONTACT:

SITE ACQUISITION
CLEARWIRE
4400 CARILLON POINT
KIRKLAND, WA 98033
TEL:
FAX:
CONTACT:

ZONING
REALCOM ASSOCIATES LLC
14432 SE EASTGATE WAY SUITE 280
BELLEVUE, WA 98007
TEL: (425) 274-4444 EXT 141
FAX:
CONTACT: JENNIFER TAYLER

PROJECT TEAM

LDC
THE CIVIL ENGINEERING GROUP
Commercial
Infrastructure
Residential
14201 NE 200th St., #100
Woodinville, WA 98072
Ph. 425.806.1869
Fx. 425.482.2893
www.LDCcorp.com

clear w're® WiMAX
4400 CARILLON POINT
KIRKLAND, WA 98033

SCL PM#: 250509-3-601, SCL TOWER#: B13/16 S
CENTRAL PARK
WA-SEA522-B
12314 NE 65TH STREET
KIRKLAND, WA 98033

RELEASE	
DATE	
4/09/09	WiMAX
8/10/09	ISSUED FOR REVIEW

MARK E. VILLANUEVA
STATE OF WASHINGTON
48908
REGISTERED PROFESSIONAL ENGINEER
8-13-09

LDC, INC.
SHEET TITLE: TITLE SHEET
SHEET NUMBER: SEA522-B-T01
DRAWN BY: RM
CHECKED BY: MV
PLOT SCALE: 24x36 = 1:1 / 11x17 = 1:2

6 5 4 3 2 1
D C B A

GENERAL NOTES

SCALE: NTS | #

1. ALL CONSTRUCTION AND MATERIALS SHALL COMPLY WITH THE "INTERNATIONAL BUILDING CODE 2006" AND SHALL MEET OR EXCEED THE STRICTER OF APPLICABLE COUNTY CODES AND REGULATIONS LATEST EDITIONS.
2. ANTENNAS, CABINETS AND COAXIAL CABLE SHALL BE PROVIDED BY CLIENT. CONTRACTOR SHALL COORDINATE SCHEDULE OF DELIVERY TO AVOID DELAYS.
3. DAMAGE TO ALL UTILITIES, LAND, DRIVEWAY AREAS AND PROPERTY OF OTHERS DISTURBED DURING CONSTRUCTION, SHALL BE RETURNED TO THE ORIGINAL CONDITION AT THE COMPLETION OF WORK.
4. CONTRACTOR SHALL COORDINATE WITH THE LOCAL POWER AND TELEPHONE UTILITIES AND THE CONSTRUCTION MANAGER TO CONFIRM THE SOURCE OF SERVICE, PRIOR TO INSTALLATION OF CONDUITS.
5. EXISTING VEGETATION AND ORGANIC MATERIALS SHALL BE REMOVED FROM THE CONCRETE PAD AREA FILL SITE TO DESIGN ELEVATION W/CLEAN, SANDY SOIL COMPACT UNDER CONCRETE PAD TO OBTAIN NOT LESS THAN 95% OF THE MODIFIED PROCTOR MAXIMUM DRY DENSITY FOR SOIL IN ACCORDANCE WITH ASTM 0557.
6. RE-GRADE AROUND PAD AS REQUIRED TO ALLOW MAXIMUM 3" OF PAD THICKNESS, EXTENDING ABOVE GRADE.
7. ALL WORK SHALL BE DONE SATISFACTORY IN A PROFESSIONAL WORKMANLIKE MANNER, SUBJECT TO INSPECTION DURING THE CONSTRUCTION AND FINAL APPROVAL BY THE CONSTRUCTION MANAGER.
8. ANY SUBSTITUTIONS OF MATERIALS, EQUIPMENT OR ALTERATIONS FROM THE PLANS AND/OR SPECIFICATIONS SHALL BE APPROVED BY THE CONSTRUCTION MANAGER.
9. COLOR SELECTION SHALL BE COORDINATED WITH THE CONSTRUCTION MANAGER.
10. CONTRACTOR SHALL VERIFY EXISTING CONDITIONS AND DIMENSIONS AND BRING DISCREPANCIES TO THE ATTENTION OF CONSTRUCTION MANAGER.
11. CONTRACTOR SHALL CONTACT SUBSURFACE UTILITY LOCATOR FOR EXACT LOCATION OF EXISTING UTILITIES, PRIOR TO COMMENCEMENT OF CONSTRUCTION ACTIVITIES. CONTRACTOR SHALL VERIFY EXISTING UTILITY LOCATIONS BY TEST PIT. AS NECESSARY. EXACT LOCATION OF UTILITIES SHOWN ON PLAN ARE APPROXIMATE & FOR PLANNING PURPOSES ONLY.
12. CONTRACTOR SHALL DOCUMENT THE "AS BUILT" LOCATIONS OF ALL BURIED UTILITIES, INCLUDING POWER, GROUNDING, ETC.
13. CONTRACTOR SHALL SECURE THE NECESSARY PERMITS FOR THIS PROJECT FROM ALL APPLICABLE GOVERNMENT AGENCIES. CONTRACTOR SHALL BE RESPONSIBLE FOR ABIDING BY ALL THE CONDITIONS AND REQUIREMENTS OF THE PERMITS.
14. TOWER AND TOWER FOUNDATIONS ARE SHOW FOR ILLUSTRATIVE PURPOSES ONLY.
15. CONTRACTOR SHALL VISIT THE PROJECT SITE TO VIEW ALL CONDITIONS PRIOR TO SUBMITTING BID. ANY CHANGES DURING CONSTRUCTION DUE TO AN EXISTING CONDITION, VISUALLY ASCERTAINABLE PRIOR TO SUMMATING BID, CANNOT BE THE BASIS FOR A CHANGE ORDER.
16. COAT ALL SURFACES WITH NO-OX WHERE DISSIMILAR METALS CONTACT.
17. CONTRACTOR SHALL REMOVE ALL DEBRIS AND EMPTY COAX REELS FROM THE SITE UPON COMPLETION OF THE PROJECT.

PROJECT NOTES

SCALE: NTS | #

REINFORCED CONCRETE:

R-1. CONCRETE: ALL CONCRETE SHALL BE F'c = 3,000 PSI AT END OF 28 DAYS AS DETERMINED BY ASTM C31 AND C39 AND SHALL BE NORMAL WEIGHT.
R-2. PREPARATION, TESTING AND PLACING OF CONCRETE AND REINFORCEMENT SHALL BE PER ACI-318 BUILDING CODE REQUIREMENTS FOR STRUCTURAL CONCRETE, LATEST EDITION.
R-3. REINFORCING BARS SHALL HAVE A MINIMUM YIELD STRENGTH OF Fy= 60,000 PSI AND SHALL COMPLY WITH ASTM A615.
R-4. PROVIDE MINIMUM CONCRETE COVERAGE FOR REINFORCING STEEL OF 3".
R-5. EXISTING VEGETATION AND ORGANIC MATERIALS SHALL BE REMOVED FROM THE SLAB FOUNDATION AREA. FILL TO INDICATED ELEVATION WITH CLEAN SANDY SOIL COMPACT TO OBTAIN 2500 PSI BEARING CAPACITY. CONCRETE EQUIPMENT PAD SHALL BE PLACED OVER UNDISTURBED OR WELL-COMPACTED SOIL.

DESIGN:

D-1. DESIGN IS IN ACCORDANCE WITH THE INTERNATIONAL BUILDING CODE 2003.
D-2. EQUIPMENT CABINET LOADING PER CLEARWIRE STANDARD EQUIPMENT.
D-3. DESIGN LOADS: WASHINGTON STATE
 A. 100 MPH WIND SPEED, 3 SECOND GUST, CATEGORY 2. IMPORTANCE FACTOR 1.0, EXPOSURE CATEGORY C.
 B. ALL OTHER LOAD ARE PER ASCE 7-02
D-4. PAD ON GRADE DESIGN IS BASED ON MINIMUM SOIL BEARING CAPACITY OF 1000 PSF.

STRUCTURAL:

S-1. DETAIL, FABRICATE, AND ERECT ALL STRUCTURAL STEEL IN ACCORDANCE WITH AISC, SPECIFICATIONS FOR DESIGN, FABRICATION AND ERECTION OF STRUCTURE STEEL FOR BUILDINGS.
S-2. ALL STRUCTURAL STEEL WORK SHALL CONFORM TO THE AISC SPECIFICATION FOR STRUCTURAL STEEL FOR BUILDING - ALLOWABLE STRESS DESIGN AND PLASTIC DESIGN, 9TH EDITION.
S-3. STRUCTURAL PIPE COLUMNS SHALL COMPLY WITH ASTM A53. TYPE E OR S, GRADE B, Fy = 36 KSI. ALL WIDE FLANGE SHAPES SHALL BE ASTM A992. GRADE 50. ALL STRUCTURAL SHAPES & PLATE SHALL COMPLY WITH ASTM A36.
S-4. WELDING: ALL WELDING IS TO BE DONE BY PRE-QUALIFIED WELDERS HOLDING CURRENT CERTIFICATE FROM A RECOGNIZED TESTING LABORATORY. ALL WELDS ARE TO BE PER A.W.S. CODE, LATEST EDITION ALL WELDS SHALL BE 3/16" MINIMUM FILLET WELDS U.O.N. ELECTRODES SHALL BE E70XX.
S-5. THERE SHALL BE NO FIELD WELDING.
S-6. STRUCTURAL GROUT SHALL BE SHRINK RESISTANT NON-EXPANSIVE, NONMETALLIC GROUT WITH A MINIMUM 28 DAY COMPRESSIVE STRENGTH OF 5,000 PSI WHEN TESTED IN ACCORDANCE WITH ASTM CODE C109. FORMS SHALL BE PLACED AROUND BASE PLATE AND THE STRUCTURAL GROUT SHALL BE POURED NO DRY-DAMP PACKING.
S-7. ANCHOR BOLTS AND ALL-THREAD RODS SHALL COMPLY WITH ASTM A36, UNLESS OTHERWISE NOTED. ALL OTHER BOLTS AND NUTS SHALL COMPLY WITH TO ASTM A325. ALL BOLTS SHALL BE HOT-DIPPED GALVANIZED.
S-8. ALL EXPOSED STEEL SHALL BE HOT DIPPED GALVANIZED AFTER FABRICATION PER ASTM A153 OR A123.
S-9 APPLY TWO COATS OF ZINC-RICH RUST-OLEUM #2185 PAINT OR 'ZC' COLD-APPLIED ZINC-RICH PAINT, #10003, A ZINC RICH PAINT FROM RODDA PAINT. PRIMER (OPTIONAL) IS TO BE ZC AEROSOL SPRAY: NO. 10000. THE SURFACE RUST/DAMPNESS IF ANY IS TO BE REMOVED. LIQUID PAINT, FREQUENTLY STIRRED, IS TO BE APPLIED WHEN DRY OUTSIDE ON A WINDLESS DAY. SEE HTTP://WWW.ZRCWORLDWIDE.COM/T_FAQ.ASP#Q16 1-800-831-3275.APPLY TO ALL FILLED DRILLED HOLES AND CUTS. GRID-GUARD EPOXY #5465 OR AMERON "AMERLOCK 2", A FAST-DRYING SURFACE-TOLERANT EPOXY COATING SHALL BE APPLIED TO ALL AREAS WHERE GALVANIZED SURFACES NEED TO BE RECONDITIONED, INCLUDING ALL WELD AREAS. SURFACES ARE TO BE MECHANICALLY CLEANED OR HAND-CLEANED AT A MINIMUM.

ELECTRICAL NOTES

SCALE: NTS | #

1. ALL ELECTRICAL WORK SHALL CONFORM TO THE REQUIREMENTS OF THE NATIONAL ELECTRICAL CODE (NEC) AS WELL AS APPLICABLE STATE AND LOCAL CODES.
2. ALL ELECTRICAL ITEMS SHALL BE UL APPROVED OR LISTED AND PROCURED PER SPECIFICATION REQUIREMENTS.
3. THE ELECTRICAL WORK INCLUDES ALL LABOR AND MATERIAL DESCRIBED BY DRAWINGS AND SPECIFICATION, INCLUDING INCIDENTAL WORK TO PROVIDE COMPLETE, OPERATING AND APPROVED ELECTRICAL SYSTEM.
4. GENERAL CONTRACTOR SHALL PAY FEES FOR PERMITS, AND IS RESPONSIBLE FOR OBTAINING SAID PERMITS, AND COORDINATION OF INSPECTIONS.
5. ELECTRICAL AND TELCO WIRING BETWEEN CABINETS SHALL RUN IN EMT OR SCHEDULE 40 PVC (AS PERMITTED BY CODE).
6. ELECTRICAL AND TELCO WIRING OUTSIDE A BUILDING AND EXPOSED TO WEATHER SHALL BE IN WATER TIGHT GALVANIZED RIGID STEEL CONDUITS AND WHERE REQUIRED IN LIQUID TIGHT FLEXIBLE METAL OR PVC WHERE LOCAL CODES AND SITE CONDITIONS PERMIT.
7. ELECTRICAL WIRE SHALL BE COPPER WITH TYPE XHHW, THWN OR THIN INSULATION.
8. INSTALL SCH. 40 PVC CONDUIT BETWEEN UTILITY DEMARCATION POINT AND ELECTRICAL METER AS INDICATED IN THIS DRAWING, PROVIDE FULL LENGTH PULL ROPE. COORDINATE INSTALLATION WITH UTILITY COMPANY.
9. INSTALL SCH. 40 PVC CONDUIT BETWEEN UTILITY DEMARCATION POINT, TELCO CABINET & CLEARWIRE CABINET AS INDICATED IN THIS DRAWING, PROVIDE FULL LENGTH PULL ROPE. COORDINATE INSTALLATION WITH UTILITY COMPANY.
10. ALL EQUIPMENT LOCATED OUTSIDE SHALL HAVE NEMA 3R ENCLOSURE.
11. COORDINATE EXACT TELEPHONE REQUIREMENTS AND SERVICE ROUTING WITH LOCAL TELEPHONE COMPANY. APPLY FOR TELEPHONE SERVICE AS SOON AS POSSIBLE.
12. IT IS THE GENERAL CONTRACTOR'S RESPONSIBILITY TO APPLY FOR COMMERCIAL POWER IMMEDIATELY UPON RECEIVING AWARD OF BID. THE GENERAL CONTRACTOR IS REQUIRED TO KEEP ALL RECEIPTS FROM THE POWER COMPANY ACKNOWLEDGING APPLICATION FOR POWER AND COMPANY THERE AFTER. ALSO, THE GENERAL CONTRACTOR SHALL RECEIVE IN WRITING FROM THE POWER COMPANY AS TO WHEN THE ANTICIPATED POWER CONNECTION SHALL BE COMPLETE. ANY GENERATOR AT OR NEAR THE SCL TOWER IS UNACCEPTABLE FOR SCL.

GROUNDING NOTES

SCALE: NTS | #

1. AN ANTIOXIDANT COMPOUND SHALL BE APPLIED TO ALL EXTERIOR, ABOVE GRADE, MECHANIC, GROUND CONNECTIONS.
2. CONTRACTOR SHALL SUPPLY ALL MATERIAL, LABOR AND EQUIPMENT NECESSARY FOR A COMPLETE SYSTEM AS INTENDED HEREIN UNLESS OTHERWISE NOTED.
3. ALL EXTERNAL GROUND CONDUCTORS SHALL BE #2 AWG, BARE, SOLID, TINNED COPPER UNLESS OTHERWISE NOTED.
4. ALL GROUND CONNECTIONS SHALL BE MADE WITH EXOTHERMIC WELD PROCESS UNLESS OTHERWISE NOTED OR APPROVED ALL CONNECTIONS SHALL BE MADE AT DESIGNATED LOCATIONS ON THE EQUIPMENT.
5. EXACT LOCATION OF GROUND RODS AND GROUND CONNECTION POINTS SHALL BE DETERMINED IN THE FIELD, ADJUST LOCATIONS AS REQUIRED TO KEEP GROUND CONNECTIONS AS SHORT AS POSSIBLE (9" MIN BEND RADIUS AND 90 DEGREE MAX BEND ANGLE) ALL BELOW GRADE GROUNDING SHALL BE INSPECTED AND APPROVED BY CONSTRUCTION MANAGER PRIOR TO BACK FILLING.
6. ALL GROUND COMPONENTS SHALL BE INSTALLED WITHIN THE CONFINES OF THE FENCED AREA. ANY METALLIC ITEMS WITHIN 6' OF THE GROUND RING SHALL BE BONDED TO THE GROUND RING. GROUNDING REQUIREMENT NOT SHOWN ON PLANS ARE WAVE GUIDE HATCH COVERPLATE, CABLE TRAYS, SUPPORTS, SERVICE PANELS, DISCONNECT SWITCHES HVAC UNITS, ETC THESE ITEMS MUST BE GROUNDED.
7. ALL EXTERIOR EXPOSED GROUND CONDUCTORS LONGER THAT 18" SHALL BE PROTECTED AND SUPPORTED BY A PVC SCHEDULE 80 CONDUIT SLEEVE MOUNTED WITH CLIC-STRAP SUPPORTS FROM 6" BELOW FINISHED GRADE TO 6" FROM FINAL CONNECTION.
8. ALL GROUND RODS SHALL BE DRIVEN STRAIGHT DOWN, PERPENDICULAR TO FINISHED GRADE. SUITABLE PROTECTION SHALL BE PROVIDED ON END OF RODS TO PREVENT MUSHROOMING WITH GROUND DURING INSTALLATION.
9. GROUND CONDUCTORS SHALL NOT COME IN CONTACT WITH THE SLAB OR TOWER EXCEPT AS DESIGNATED.
10. THE UTILITY NEUTRAL/GROUND BOND IS TO BE MADE IN THE METER OR MAIN DISCONNECT SWITCH, NOT IN ATS.
11. ALL EQUIPMENT SURFACES TO BE BONDED TO GROUNDING SYSTEM SHALL BE STRIPPED OF ALL PAINT AND DIRT, CONNECTIONS TO VARIOUS METALS SHALL BE A TYPE AS TO NOT CAUSE A GALVANIC OR CORROSIVE REACTION AREA SHALL BE REPAINTED FOLLOWING BONDING.

ABBREVIATIONS AND SYMBOLS

SCALE: NTS | 9

A/C	AIR CONDITIONING
ADJ.	ADJUSTABLE
AFF	ABOVE FINISH FLOOR
AMSL	ABOVE MEAN SEA LEVEL
APPROX.	APPROXIMATELY
ASTM	AMERICAN SOCIETY FOR TESTING AND MATERIALS
AWG	AMERICAN WIRE GAUGE
BLDG.	BUILDING
BLK.	BLOCK
B/S	BUILDING STANDARD
CLG	CEILING
CLR.	CLEAR
CONC.	CONCRETE
CONST.	CONSTRUCTION
CONT.	CONTINUOUS
CO.	COMPANY
DBL.	DOUBLE
DIA., Ø	DIAMETER
DIM.	DIMENSION
DN	DOWN
DTL, DETL	DETAIL
DWG.	DRAWING
E	EAST
EA.	EACH
EL, ELEV	ELEVATION
ELECT.	ELECTRICAL
EQ.	EQUAL
EQUIP.	EQUIPMENT
EX.	EXISTING
EXT.	EXTERIOR
FIN.	FINISH
FLUOR.	FLUORESCENT
FLR	FLOOR
FT.	FOOT, FEET
GA.	GAUGE
GALV.	GALVANIZE(D)
GC	GENERAL CONTRACTOR
GLB	GLUE LAMINATED BEAM
GRND	GROUND
GWB	GYPSUM WALL BOARD
HDWD.	HARDWOOD
HORIZ.	HORIZONTAL
HR	HOUR
HT.	HEIGHT
HVAC	HEATING, VENTING AND AIR CONDITIONING
IBC	INTERNATIONAL BUILDING CODE
I.D.	INSIDE DIA.
IN.	INCH
INFO	INFORMATION
INSUL.	INSULATION
INT.	INTERIOR
LB(S)	POUND(S)
MAX	MAXIMUM
MECH	MECHANICAL
MTL	METAL
MFR.	MANUFACTURER
MGR	MANAGER
MIN	MINIMUM
MISC.	MISCELLANEOUS
N	NORTH
N/A	NOT APPLICABLE
NIC	NOT IN CONTRACT
NTS	NOT TO SCALE
O.C.	ON CENTER
OD	OUTSIDE DIAMETER
OPG.	OPENING
OPP	OPPOSITE
PL	PROPERTY LINE
PLYWD.	PLYWOOD
PR	PAIR
PROJ	PROJECT
PROP	
PT	PRESSURE TREATED
RCP	REFLECTED CEILING PLAN
REQ'D	REQUIRED
RM	ROOM
R.O.	ROUGH OPENING
S	SOUTH
SCHED	SCHEDULE
SHT	SHEET
SIM.	SIMILAR
SPEC.	SPECIFICATION
SQ	SQUARE
SS	STAINLESS STEEL
STL.	STEEL
STRUC	STRUCTURAL
SUSP.	SUSPENDED
S.V.	SHEET VINYL
THRU	THROUGH
TNND	TINNED
T.O.C.	TOP OF CONCRETE
T.O.M.	TOP OF MASONRY
TS	TUBE STEEL
TYP.	TYPICAL
UG	UNDERGROUND
UL	UNDERWRITERS LAB
UNO	UNLESS NOTED OTHERWISE
VERT.	VERTICAL
VIF	VERIFY IN FIELD
VT	VINYL TILE
W	WEST
W/	WITH
WDW	WINDOW
W/O	WITHOUT
W.P.	WORKING POINT

∡	ANGLE
&	AND
@	AT
℄	CENTER LINE
#	NUMBER
-	PLATE

3	REVISION
A01	KEY NOTE
1 / A-1	DETAIL REFERENCE
8 / A-2	ELEVATION REFERENCE
100	ROOM NUMBER
17 / A-3	SECTION REFERENCE
	ELEVATION MARKER

LDC
THE CIVIL ENGINEERING GROUP
Commercial
Infrastructure
Residential
14201 NE 200th St., #100
Woodinville, WA 98072
Ph. 425.806.1869
Fx. 425.482.2893
www.LDCcorp.com

clear w•re® WiMAX

4400 CARILLON POINT
KIRKLAND, WA 98033

SCL PM#: 250509-3-601, SCL TOWER#: B13/16 S

CENTRAL PARK

WA-SEA522-B

12314 NE 65TH STREET
KIRKLAND, WA 98033

RELEASE	
DATE	
4/09/09	WIMAX
8/10/09	ISSUED FOR REVIEW

MARK E. VILLWOCK
STATE OF WASHINGTON
40908
REGISTERED
PROFESSIONAL ENGINEER
06-13-09

LDC, INC.

SHEET TITLE: GENERAL NOTES

SHEET NUMBER: SEA522-B-N01

DRAWN BY: RM
CHECKED BY: MV

PLOT SCALE: 24x36 = 1:1 / 11x17 = 1:2

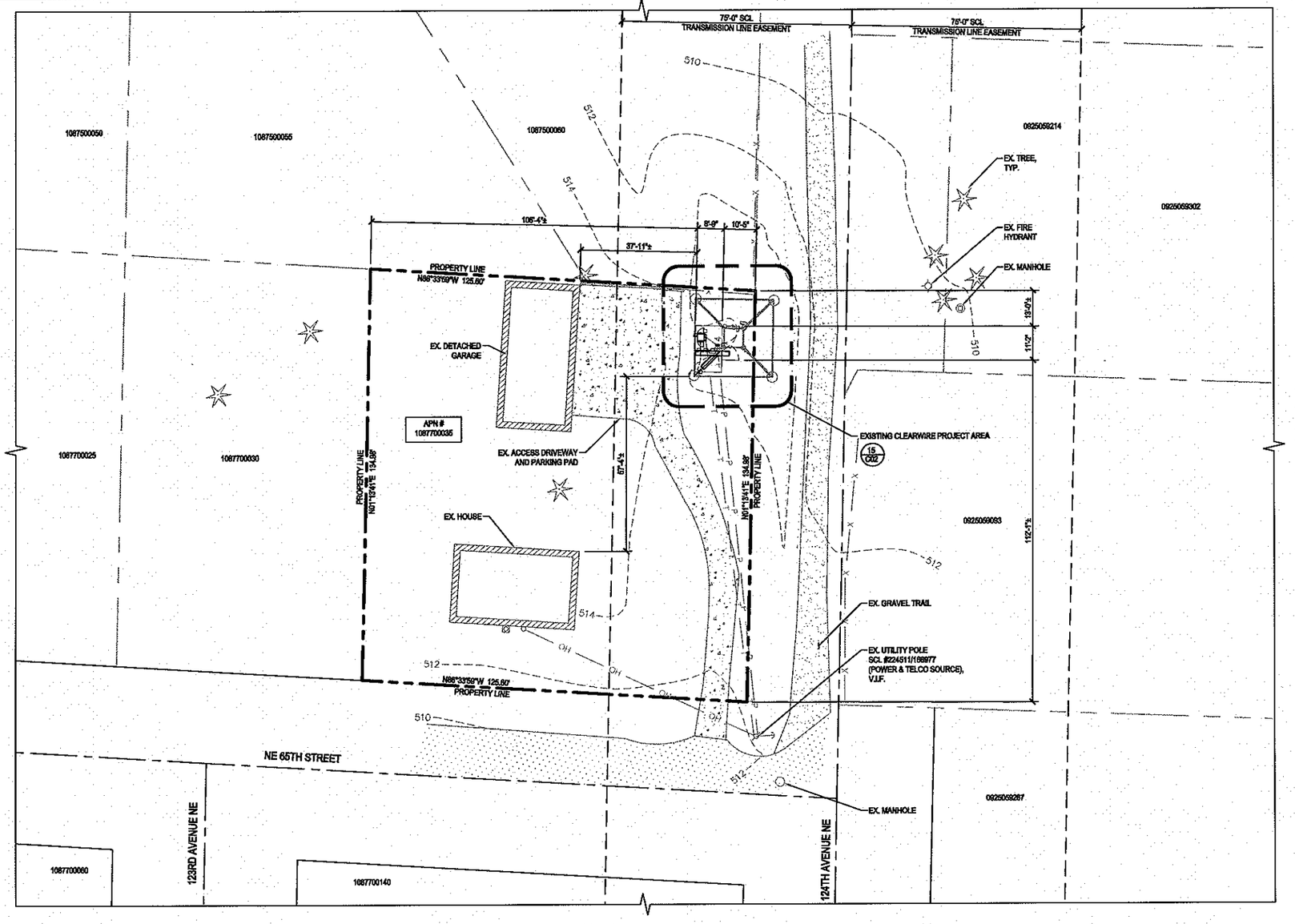

LOT7, BLOCK1, BRIDLE TRAILS PARK ADDITION NO, 3, ACCORDING TO THE PLAT RECORDED IN VOLUME 55 OF PLATS, PADG 77, RECORDS OF KING COUNTY, WASHINGTON, SITUATE IN THE COUNTY OF KING, STATE OF WASHINGTON.

LEGAL DESCRIPTION

DISTANCE FROM THE PROPOSED LEASE LINES TO ADJACENT PROPERTY LINES:

NORTH PROPERTY LINE:	13'-0"±
EAST PROPERTY LINE:	10'-0"
SOUTH PROPERTY LINE:	114'-2"±
WEST PROPERTY LINE:	106'-7"±

SETBACK NOTE

THIS OVERALL SITE PLAN IS NOT A SURVEY OF THE PARENT PARCEL.

THIS DRAWING IS BASED ON THE INFORMATION TAKEN FROM THE ASSESOR REAL PROPERTY RECORDS OF KIRKLAND.

NOTE

NOTES:

1. SITE PLAN IS A DIAGRAMMATIC REPRESENTATION ONLY; VERIFY ALL DIMENSIONS.
2. VERIFY ALL PROPERTY LINE INFORMATION WITH EXISTING SURVEY DATA.

OVERALL SITE PLAN

SCALE: 1" = 30'-0"

15

LDC
Commercial Infrastructure Residential
THE CIVIL ENGINEERING GROUP
14201 NE 200th St., #100
Woodinville, WA 98072
Ph. 425.806.1669
Fx. 425.482.2893
www.LDCcorp.com

clear w're® WiMAX
4400 CARILLON POINT
KIRKLAND, WA 98033

SCL PM#: 250509-3-601, SCL TOWER#: B13/16 S
CENTRAL PARK
WA-SEA522-B
12314 NE 65TH STREET
KIRKLAND, WA 98033

RELEASE	
DATE	
4/09/09	WiMAX
8/10/09	ISSUED FOR REVIEW

MARK E. VILLWOCK
STATE OF WASHINGTON
40908
REGISTERED PROFESSIONAL ENGINEER
8-13-09

LDC, INC.

SHEET TITLE: OVERALL SITE PLAN

SHEET NUMBER: SEA522-B-C01

DRAWN BY: RM
CHECKED BY: MV

PLOT SCALE: 24x36 = 1:1 / 11x17 = 1:2

6 5 4 3 2 1

D C B A

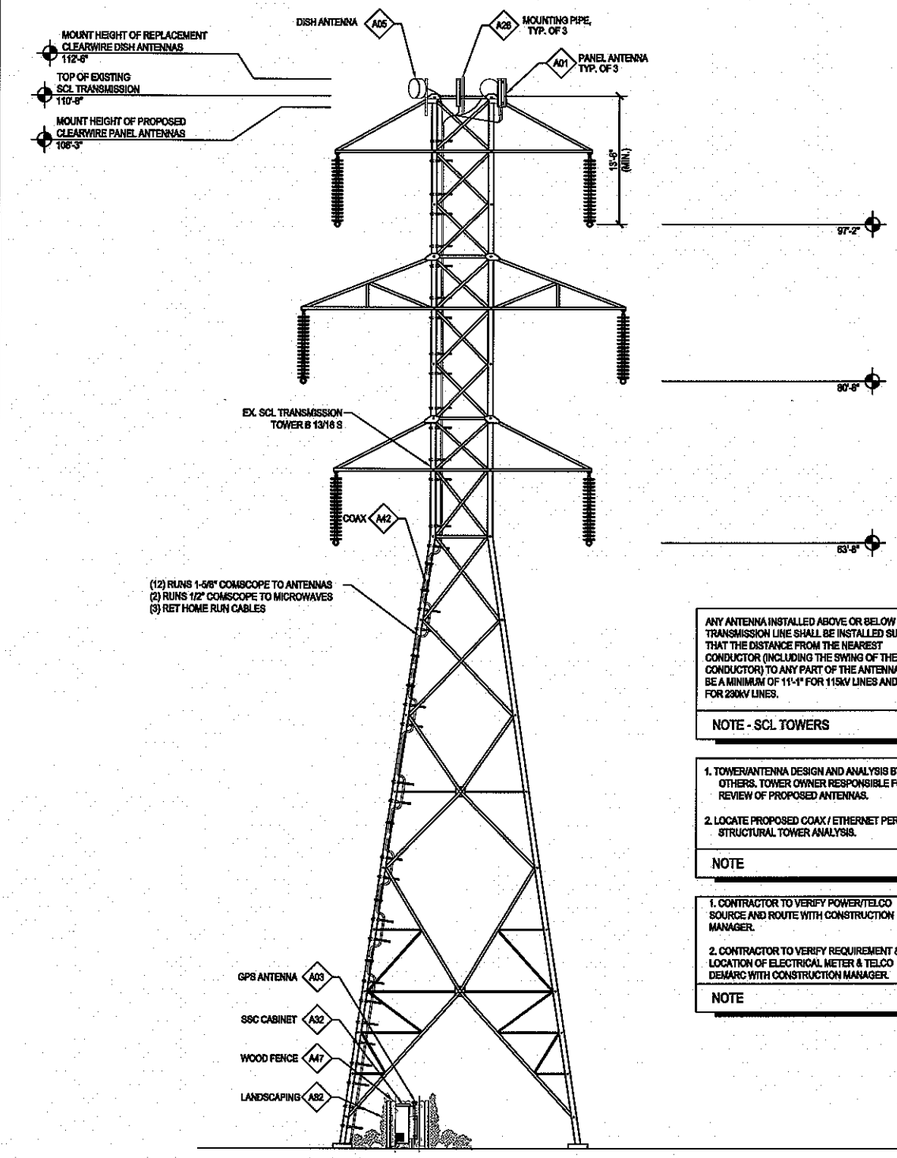

SOUTH TOWER ELEVATION — SCALE: 1/8" = 1'-0" — 6

ANY ANTENNA INSTALLED ABOVE OR BELOW THE TRANSMISSION LINE SHALL BE INSTALLED SUCH THAT THE DISTANCE FROM THE NEAREST CONDUCTOR (INCLUDING THE SWING OF THE CONDUCTOR) TO ANY PART OF THE ANTENNA SHALL BE A MINIMUM OF 11'-1" FOR 115kV LINES AND 12'-0" FOR 230kV LINES.

NOTE - SCL TOWERS

1. TOWER/ANTENNA DESIGN AND ANALYSIS BY OTHERS. TOWER OWNER RESPONSIBLE FOR REVIEW OF PROPOSED ANTENNAS.
2. LOCATE PROPOSED COAX / ETHERNET PER STRUCTURAL TOWER ANALYSIS.

NOTE

1. CONTRACTOR TO VERIFY POWER/TELCO SOURCE AND ROUTE WITH CONSTRUCTION MANAGER.
2. CONTRACTOR TO VERIFY REQUIREMENT & LOCATION OF ELECTRICAL METER & TELCO DEMARC WITH CONSTRUCTION MANAGER.

NOTE

PROPOSED ANTENNA / MW DESIGN SHOWN ON DRAWINGS IS BASED ON THE FOLLOWING DESIGN PROVIDED BY CLEARWIRE U.S., LLC:

VERSION: -
DATE: 138EP06

RF & MW DESIGN

REPLACEMENT DISH ANTENNA LEGEND (112'-6")

	ALPHA SECTOR	BETA SECTOR	GAMMA SECTOR
AZIMUTH	119.58°		
ANTENNA MODEL	ANDREW PX3F-52 36"		
ANTENNA COUNT	1		
ANTENNA MOUNT HEIGHT	112'-6" (MATCH EXISTING HEIGHTS)		
COAX TYPE/SIZE	5/8"		
NUMBER OF COAX	1		
COAX LENGTH	125'±		
DOWNTILT	0°		

PROPOSED PANEL ANTENNA LEGEND (108'-3")

	ALPHA SECTOR	BETA SECTOR	GAMMA SECTOR
AZIMUTH	60°	180°	320°
ANTENNA MODEL	ARGUS LLPX310R	ARGUS LLPX310R	KATHREIN 840 10054
ANTENNA COUNT	1	1	1
BTS COUNT	1 @ GROUND EQUIPMENT	1 @ GROUND EQUIPMENT	1 @ GROUND EQUIPMENT
ANTENNA MOUNT HEIGHT	108'-3"	108'-3"	108'-3"
ETHERNET TYPE/SIZE	5/16" ETHERNET	5/16" ETHERNET	5/16" ETHERNET
NUMBER OF ETHERNET	1	1	1
ETHERNET LENGTH	125'±	125'±	125'±
DOWNTILT	0°	0°	-5°

MATCH EXISTING HEIGHTS

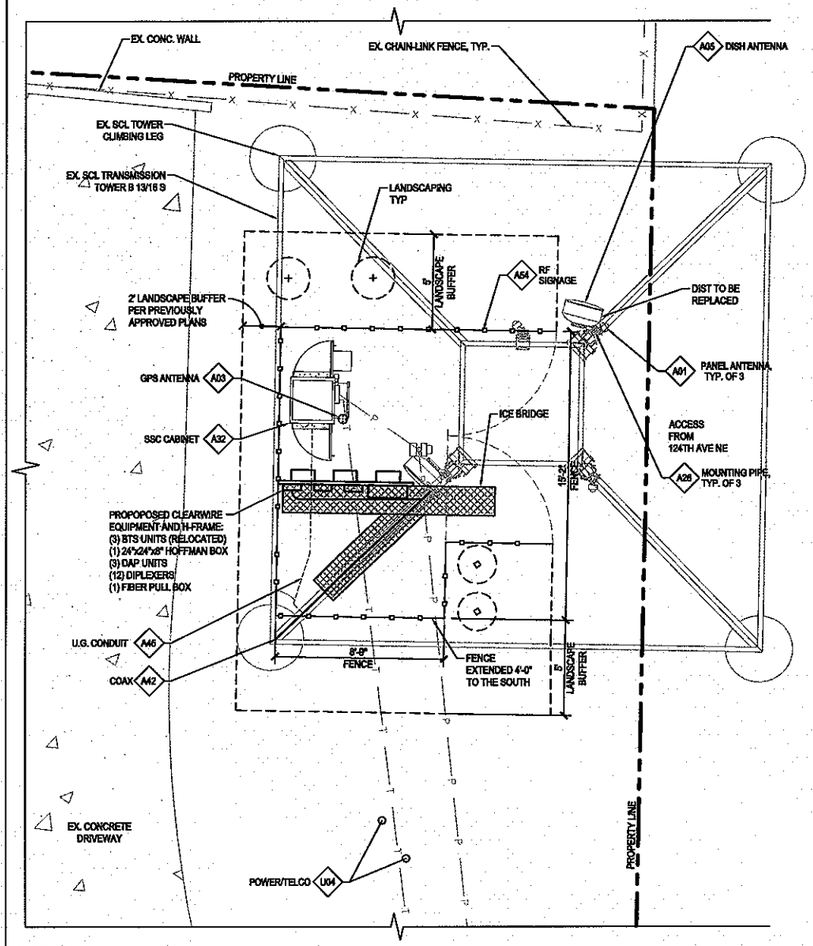

NOTES:

1. SITE PLAN IS A DIAGRAMMATIC REPRESENTATION ONLY; VERIFY ALL DIMENSIONS.
2. VERIFY ALL PROPERTY LINE INFORMATION WITH EXISTING SURVEY DATA.

COMPOUND PLAN — SCALE: 1/4" = 1'-0" — 15

#	DESCRIPTION	SEE REFERENCE
A01	PROPOSED CLEARWIRE PANEL ANTENNAS	
A03	PROPOSED CLEARWIRE GPS ANTENNA	
A05	EX. CLEARWIRE MICROWAVE DISH ANTENNA	
A06	EX. CLEARWIRE BTS UNIT	
A26	EX. CLEARWIRE ANTENNA MOUNTING PIPE, TYP.	
A32	EX. CLEARWIRE SITE-SUPPORT CABINET MOUNTED ON A CONC. PAD AT GRADE	
A42	EX. CLEARWIRE VERTICAL CABLE ROUTE	
A45	EX. CLEARWIRE ETHERNET/COAX CABLE ROUTE IN UNDERGROUND CONDUIT	
U04	EX. POWER/TELCO ROUTE	

KEY NOTE LEGEND

LDC
THE CIVIL ENGINEERING GROUP
Commercial Infrastructure Residential
14201 NE 200th St., #100 Woodinville, WA 98072
Ph. 425.806.1669 Fx. 425.482.2893
www.LDCcorp.com

clear w're® WiMAX

4400 CARILLON POINT
KIRKLAND, WA 98033

SCL PM#: 250509-3-601, SCL TOWER#: B13/16 S

CENTRAL PARK

WA-SEA522-B

12314 NE 65TH STREET
KIRKLAND, WA 98033

RELEASE	
DATE	
4/09/09	WiMAX
8/10/09	ISSUED FOR REVIEW

MARK E. VILLANUEVA — STATE OF WASHINGTON — 23908 — REGISTERED PROFESSIONAL ENGINEER — 8-13-09

LDC, INC.

SHEET TITLE: COMPOUND PLAN, SOUTH TOWER ELEVATION

SHEET NUMBER: SEA522-B-C02

DRAWN BY: RM
CHECKED BY: MV

PLOT SCALE: 24x36 = 1:1 / 11x17 = 1:2

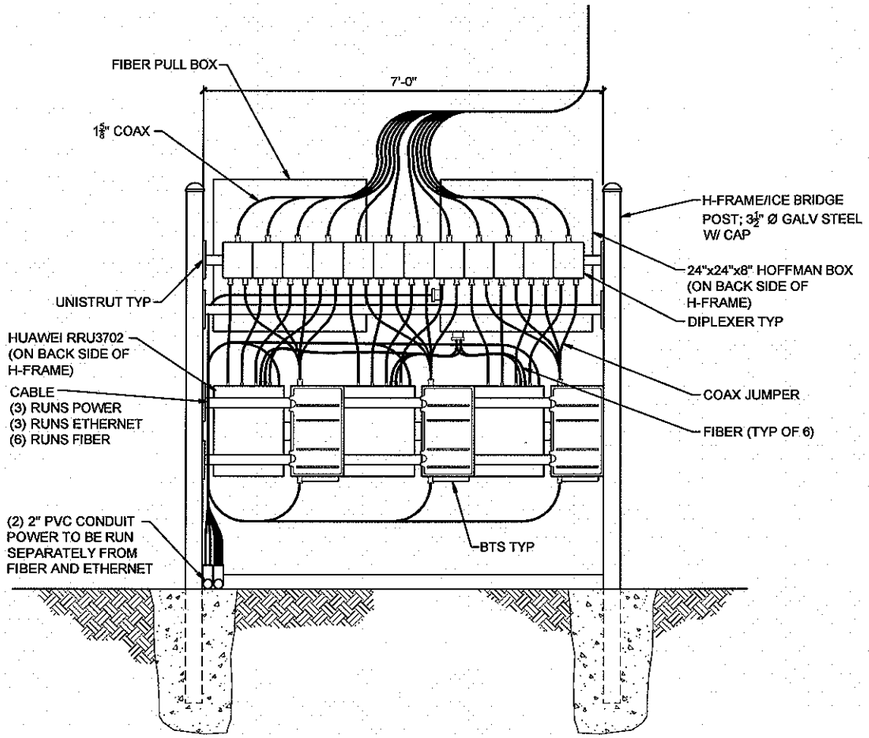

H-FRAME MOUNTED EQUIPMENT SPECIFICATIONS — SCALE: NTS — 5

SECTOR	MARKING METHOD: COLORED BANDS	MARKING METHOD: NUMBER OF BANDS
ALPHA	RED	1
BETA	BLUE	2
GAMMA	WHITE	3

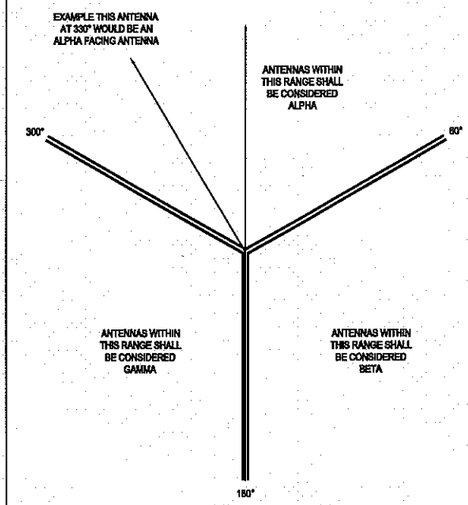

COAX/ETHERNET SHALL BE TAGGED AT (3) PLACES USING 1" WIDE WEATHERPROOF COLORED VINYL TAPE, AS FOLLOWS:

#1 END OF MAIN ETHERNET RUN WHERE THE ETHERNET CONNECTS TO THE BTS
#2 CABLE ENTRY PORT ON THE INTERIOR OF THE SHELTER
#3 END OF THE MAIN WAVEGUIDE RUN WHERE THE CABLE CONNECTS TO THE MW ANTENNA

LABEL MARKINGS FOR BTS POWER/ETHERNET CABLE (3 SECTOR SITE) — SCALE: NONE — 8

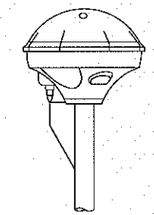

FRONT ELEVATION

MANUFACTURER:
TRIMBLE
PART#: ACUTIME 2000
LENGTH: 5" (127 MM)
WIDTH: 6.12" (155 MM)
WEIGHT: 12.8 OZ (363 G)

GPS SPECIFICATION — SCALE: 3"=1'-0" — 10

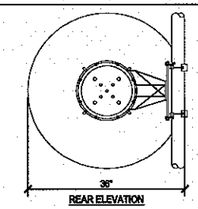

36"

REAR ELEVATION

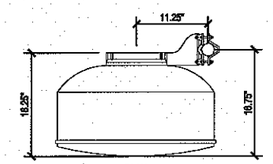

PLAN

MANUFACTURER:
ANDREW
PART#: PX3F-52 36"
DIA: 36"
DEPTH: 18.25"
OFFSET: 11.25"
WEIGHT: 27 LBS

DISH ANTENNA SPECIFICATIONS — SCALE: 1"=1'-0" — 11

1. CONTRACTOR TO PROVIDE COMPLETE SHOP DRAWINGS FOR REVIEW PRIOR TO FABRICATION.
2. CONTRACTOR TO NOTIFY PROJECT MANAGER OF ANY DISCREPANCIES WITH THE PROPOSED LAYOUT PRIOR TO PROCEEDING.
3. ALL PIPES, BRACKETS, PLATES AND MISC. HARDWARE TO BE GALVANIZED UNLESS OTHERWISE NOTED.
4. ALL ANTENNA AND COAXIAL ANTENNA CABLE TO BE FURNISHED BY LESSEE/OPERATOR AND INSTALLED BY CONTRACTOR.
5. ALL HARDWARE AND CONNECTORS TO BE GALVANIZED UNLESS OTHERWISE NOTED.
6. ANTENNA MOUNT DETAILS SHOWN IN THIS DRAWING SET ARE FOR INFORMATION AND LAYOUT ONLY. DESIGN AND ANALYSIS BY OTHERS.
7. ALL ANTENNAS TO BE MOUNTED PER MANUFACTURER'S SPECIFICATIONS.
8. ALL ANTENNA CABLES/CONNECTORS TO BE WEATHERPROOFED PER MANUFACTURER SPECIFICATIONS.
9. ALL CABLE TIES EXPOSED TO THE ELEMENTS SHALL BE UV STABILIZED BLACK W/40 LB. MIN. BREAK STRENGTH.
10. ALL CABLES SHALL BE DRESSED WITH A DRIP LOOP OF SUFFICIENT LENGTH TO ACT AS BOTH A WATER RUNOFF POINT AND TO ACT AS A SERVICE LOOP FOR SERVICING THE EQUIPMENT.

ANTENNA NOTES — SCALE: NONE — 13

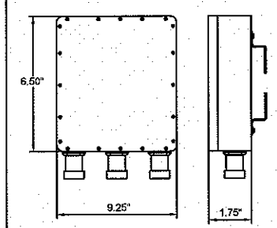

MANUFACTURER:
CLEARCOMM
PART#: CCD9-671-1W
LENGTH: 6.50"
WIDTH: 9.25"
DEPTH: 1.75"
WEIGHT: 12.0 LBS

DIPLEXER SPECIFICATIONS — SCALE: NTS — 14

NOT USED — SCALE: NTS — 6

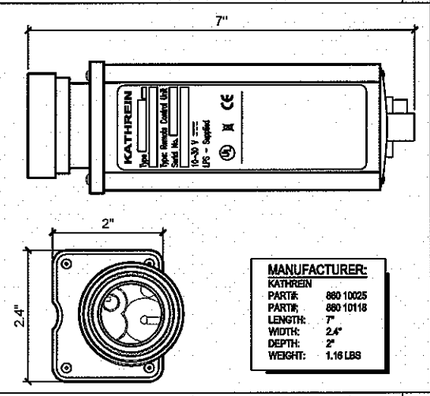

MANUFACTURER:
KATHREIN
PART#: 860 10025
PART#: 860 10118
LENGTH: 7"
WIDTH: 2.4"
DEPTH: 2"
WEIGHT: 1.16 LBS

RET SPECIFICATION — SCALE: NTS — 7

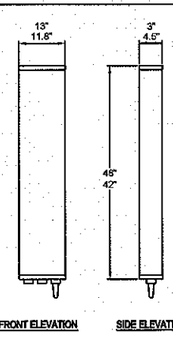

FRONT ELEVATION SIDE ELEVATION

MANUFACTURER:
KATHREIN / ARGUS
KATHREIN PART#: 840 10054
ARGUS PART #: LLPX310R
HEIGHT: 48" / 42"
WIDTH: 13" / 11.8"
DEPTH: 3" / 4.5"
WEIGHT: 35 LBS / 29 LBS

PANEL ANTENNA SPECIFICATION — SCALE: NTS — 9

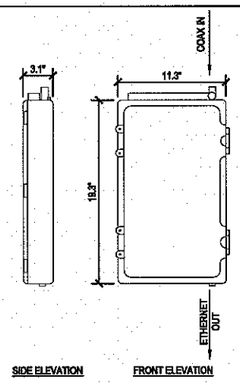

SIDE ELEVATION FRONT ELEVATION

MANUFACTURER:
NEXTNET
PART#: BTS-2500
LENGTH: 19.3" (49 CM)
WIDTH: 11.3" (28.5 CM)
DEPTH: 3.1" (13 CM)
WEIGHT: 35 LBS (16 KG)

BTS SPECIFICATION — SCALE: 1"=1'-0" — 12

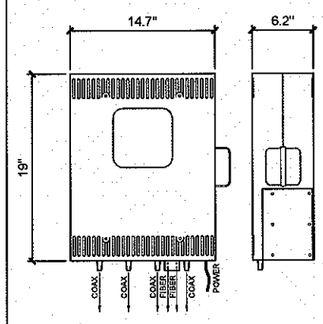

MANUFACTURER:
HUAWEI
PART#: RRU 7302
LENGTH: 19"
WIDTH: 14.7"
DEPTH: 6.2"
WEIGHT: 44 LBS

DAP SPECIFICATIONS — SCALE: NTS — 15

LDC
THE CIVIL ENGINEERING GROUP
Commercial Infrastructure Residential
14201 NE 200th St., #100 Woodinville, WA 98072
Ph. 425.806.1869 Fx. 425.482.2893
www.LDCcorp.com

clear w're® WiMAX

4400 CARILLON POINT
KIRKLAND, WA 98033

SCL PM#: 250509-3-601, SCL TOWER#: B13/16 S
CENTRAL PARK
WA-SEA522-B
12314 NE 65TH STREET
KIRKLAND, WA 98033

RELEASE	
DATE	
4/09/09	WiMAX
8/10/09	ISSUED FOR REVIEW

MARK E. VILLANUEVA — STATE OF WASHINGTON — 40005 — REGISTERED PROFESSIONAL ENGINEER — 8-13-09

LDC, INC.

SHEET TITLE: ANTENNA DETAILS, CONSTRUCTION DETAILS

SHEET NUMBER: SEA522-B-C03

DRAWN BY: RM
CHECKED BY: MV

PLOT SCALE: 24x36 = 1:1 / 11x17 = 1:2

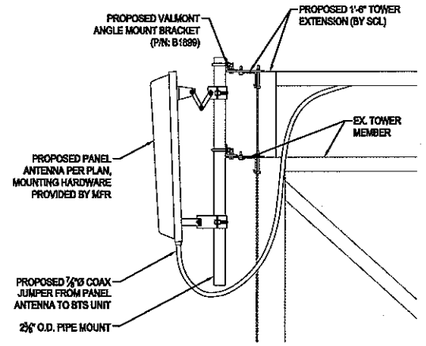

PANEL ANTENNA MOUNTING DETAIL SCALE: 1" = 1'-0" 4

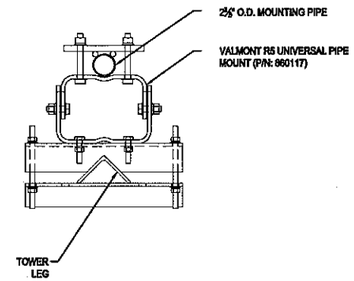

PIPE MOUNTING CLAMP SCALE: 1" = 1'-0" #

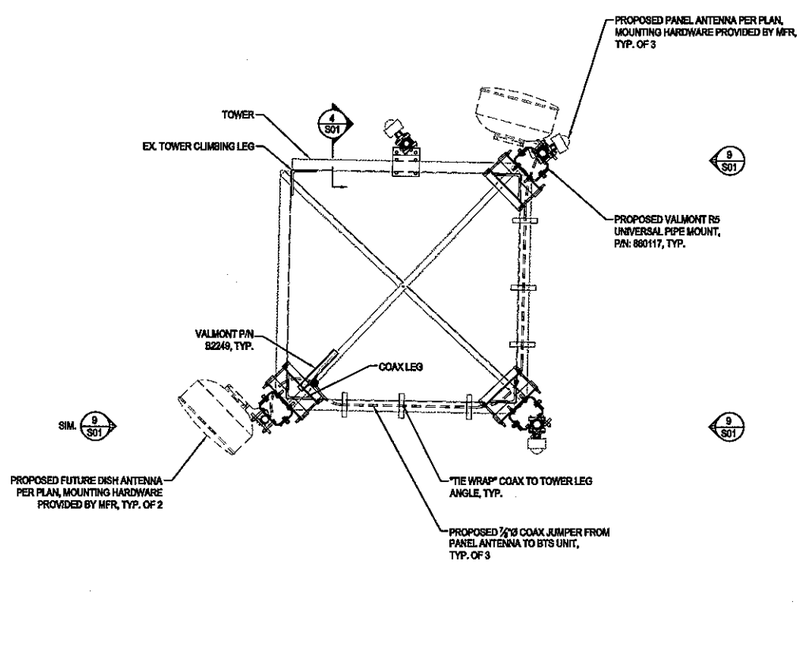

TOWER PLAN VIEW SCALE: 1" = 1'-0" 6

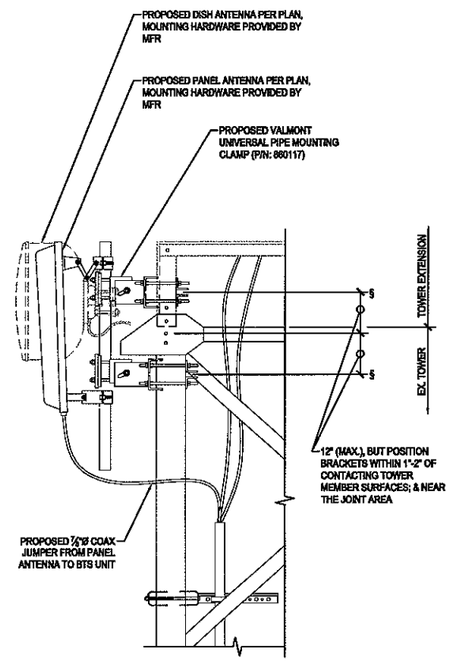

TYPICAL ANTENNA MOUNTING DETAIL SCALE: 1" = 1'-0" #

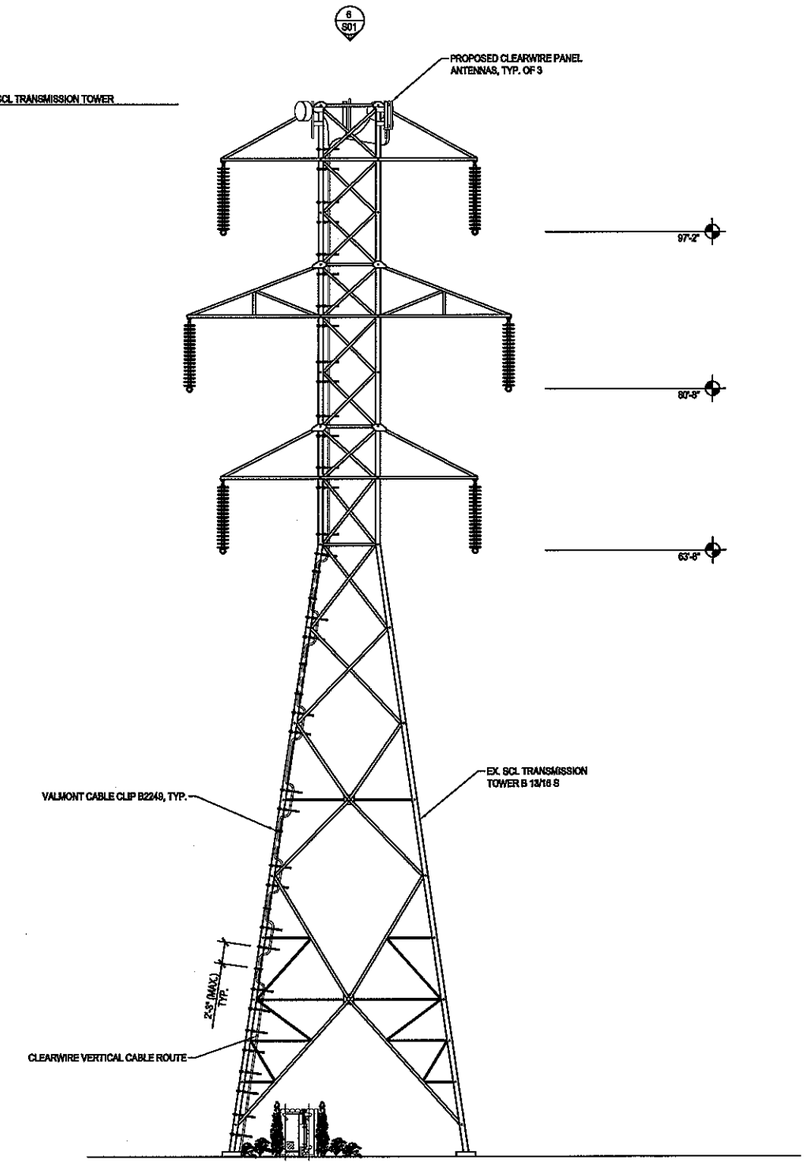

CABLE ROUTING DETAIL SCALE: 1" = 1'-0" 15

LDC
THE CIVIL ENGINEERING GROUP
Commercial
Infrastructure
Residential
14291 NE 200th St., #100
Woodinville, WA 98072
Ph. 425.806.1869
Fx. 425.482.2893
www.LDCcorp.com

clear w*re® WiMAX

4400 CARILLON POINT
KIRKLAND, WA 98033

SCL PM#: 250509-3-601, SCL TOWER#: B13/16 S

CENTRAL PARK

WA-SEA522-B

12314 NE 65TH STREET
KIRKLAND, WA 98033

RELEASE	
DATE	
4/09/09	WIMAX
8/10/09	ISSUED FOR REVIEW

MARK B. VILLAMOR, STATE OF WASHINGTON, 40705, REGISTERED PROFESSIONAL ENGINEER
8-13-09

LDC, INC.

SHEET TITLE: CABLE ROUTING DETAIL, STRUCTURAL DETAILS

SHEET NUMBER: SEA522-B-S01

DRAWN BY: RM
CHECKED BY: MV

PLOT SCALE: 24x36 = 1:1 / 11x17 = 1:2

1. ALL CONNECTIONS TO SCL TOWERS SHALL BE NO MORE THAN 12" AWAY FROM THE TOWER JOINT/NODE.

2. NO CONNECTIONS OF ANY KIND SHALL BE ALLOWED ON THE TOWER CLIMBING LEG.

CONNECTION NOTE - SCL TOWERS

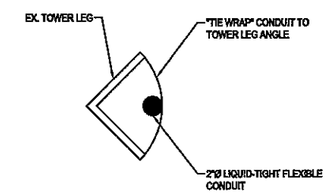

VERTICAL COAX RUN - SECTION SCALE: NTS 10

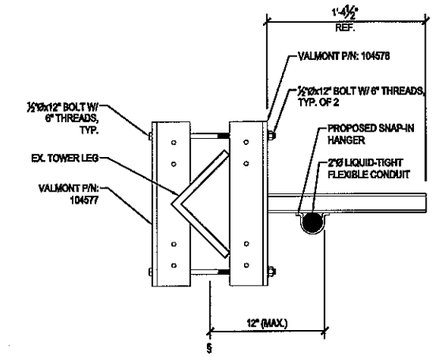

VERTICAL COAX RUN @ TOWER LEG - PLAN SCALE: NTS 13

VALMONT PARTS LIST		
P/N	DESCRIPTION	QTY
B1387	ADJUSTABLE SLIDER BRACKET	1
B3114	UNIVERSAL TOWER LEG CLAMP KIT	1
-	1/2"Ø U-BOLT	2
-	2 1/2" O.D. STD. PIPE	1
-	1/2"Ø THRU-BOLT	6

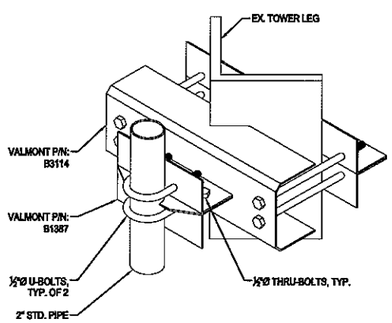

BTS MOUNT TO TOWER LEG SCALE: NTS 3

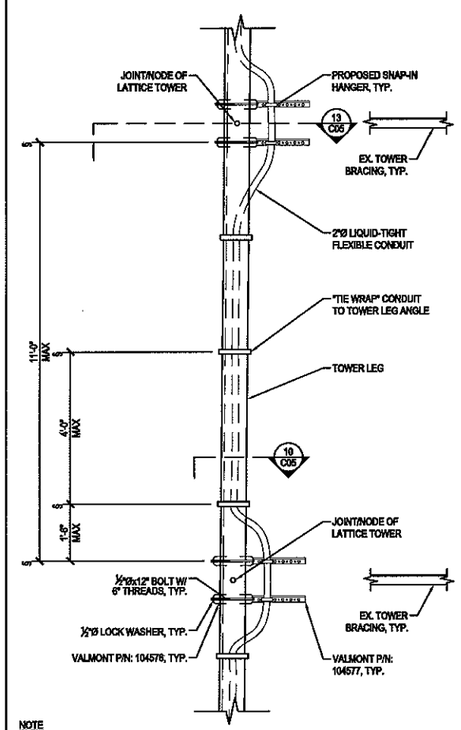

NOTE

1. PLATE WELD ASSEMBLY (P/N: 104577) SHALL BE MOUNTED TO THE TOWER LEG WITHIN 12" OF THE TOWER'S "JOINT/NODE".

VERTICAL COAX RUN @ TOWER LEG SCALE: NTS 12

VALMONT PARTS LIST B2250			
DESIGN	P/N	DESCRIPTION	QTY
-	104578	CLAMP BACK HALF	1
-	104577	PLATE WELD ASSEMBLY	1
LT5	-	1/2"Øx12" BOLT W/ 6" THREADS	2
N5	-	1/2"Ø A563 GR. A HEX NUT	2
LW5	-	1/2"Ø LOCK WASHER	2

TOTAL WEIGHT = 9 LBS

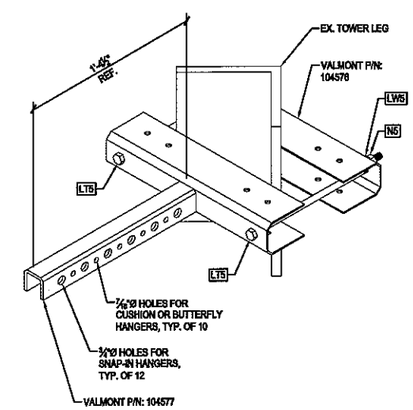

COAX CONNECTOR KIT SCALE: NTS 15

LDC
THE CIVIL ENGINEERING GROUP
Commercial Infrastructure Residential
14201 NE 200th St., #100
Woodinville, WA 98072
Ph. 425.806.1869
Fx. 425.482.2893
www.LDCcorp.com

clear w're® WiMAX

4400 CARILLON POINT
KIRKLAND, WA 98033

SCL PM#: 250509-3-601, SCL TOWER#: B13/16 S

CENTRAL PARK

WA-SEA522-B

12314 NE 65TH STREET
KIRKLAND, WA 98033

RELEASE	
DATE	
4/09/09	WIMAX
8/10/09	ISSUED FOR REVIEW

MARK E. VILLINGER
STATE OF WASHINGTON
40908
REGISTERED PROFESSIONAL ENGINEER
8-13-09

LDC, INC.

SHEET TITLE: CONSTRUCTION DETAILS, SCL TOWERS

SHEET NUMBER: SEA522-B-S02

DRAWN BY: RM
CHECKED BY: MV

PLOT SCALE: 24x36 = 1:1 / 11x17 = 1:2

◀	CADWELD	- - - - -	GROUND WIRE
■	MECHANICAL CONNECTION		
⊤⊤	COPPER GROUND BAR (GB)	⏚	GROUND
⊙	5/8" x 8' COPPER CLAD STEEL GROUND ROD	○	TEST WELL

GROUNDING SYMBOLS

#	DESCRIPTION	SEE REFERENCE
G01	GROUND ANTENNA TO GROUND BAR @ TOP OF TOWER	
G07	PROPOSED CABINET GROUND RING, INSTALL 2 GROUND RINGS AS SHOWN	
G08	GROUND RODS, INSTALL 2 TYPES PER CONSTRUCTION NOTE THIS SHEET	6 / E02
G09	GROUND EQUIPMENT CABINET TO MGB	4 / E02
G20	PROPOSED MASTER GROUND BAR @ EQUIPMENT	10 / E02
G21	PROPOSED GROUND BAR	10 / E02
G22	PROPOSED GROUND TEST WELL	6 / E02
G30	GROUND GPS ANTENNA TO GROUND RING	
G31	GROUND ANTENNA MOUNT TO GROUND BAR	

KEY NOTE LEGEND

1. CONTRACTOR TO INSTALL TWO TYPES OF GROUND RODS FOR THIS PROJECT:
   * 8'-0" GROUND RODS WILL BE INSTALLED AT THE FOUR CORNERS OF THE EQUIPMENT GROUND RING.
   * 30'-0" LONG SECTIONAL GROUND RODS WILL BE INSTALLED AT THE FOUR CORNERS OF THE GROUND RING OUTSIDE OF THE FENCED AREA.
   * 30'-0" LONG SECTIONAL GROUND RODS WILL BE INSTALLED (5 TOTAL) AT 20'-0" CENTERS IN THE TELCO TRENCH AS DESCRIBED IN THE NOTE TO THE LEFT.
2. CONTRACTOR TO UTILIZE THE TELCO TRENCH FOR AN ADDITIONAL GROUNDING RUN. AFTER TRENCH HAS BEEN DUG TO THE PROPER DEPTH CONTRACTOR TO INSTALL 5 TOTAL 30'-0" LONG SECTIONAL GROUND RODS ON 20'-0" CENTERS FOR THE FIRST 100 FEET OF TRENCH. EACH ROD WILL BE CONNECTED TOGETHER USING #2 COPPER GROUND WIRE AND THEN BACK TO THE EQUIPMENT GROUND RINGS. ALL CONNECTIONS TO GROUND RODS AND GROUND RINGS SHALL BE BY ACCEPTABLE CADWELD PROCEDURE.
3. ALLCLEAR COMMUNICATIONS SERVICES CONDUCTED A GROUNDING TEST ON JUNE 26, 2008 AT THE SITE OF SCL TOWER # B13/16 S AND OBTAINED THE FOLLOWING RESULTS:

AVERAGE SOIL RESISTIVITY

DISTANCE FROM SITE (FEET)	SOIL RESISTIVITY (OHM-CM)
5	128,869
15	58,312
30	36,194

NOTE

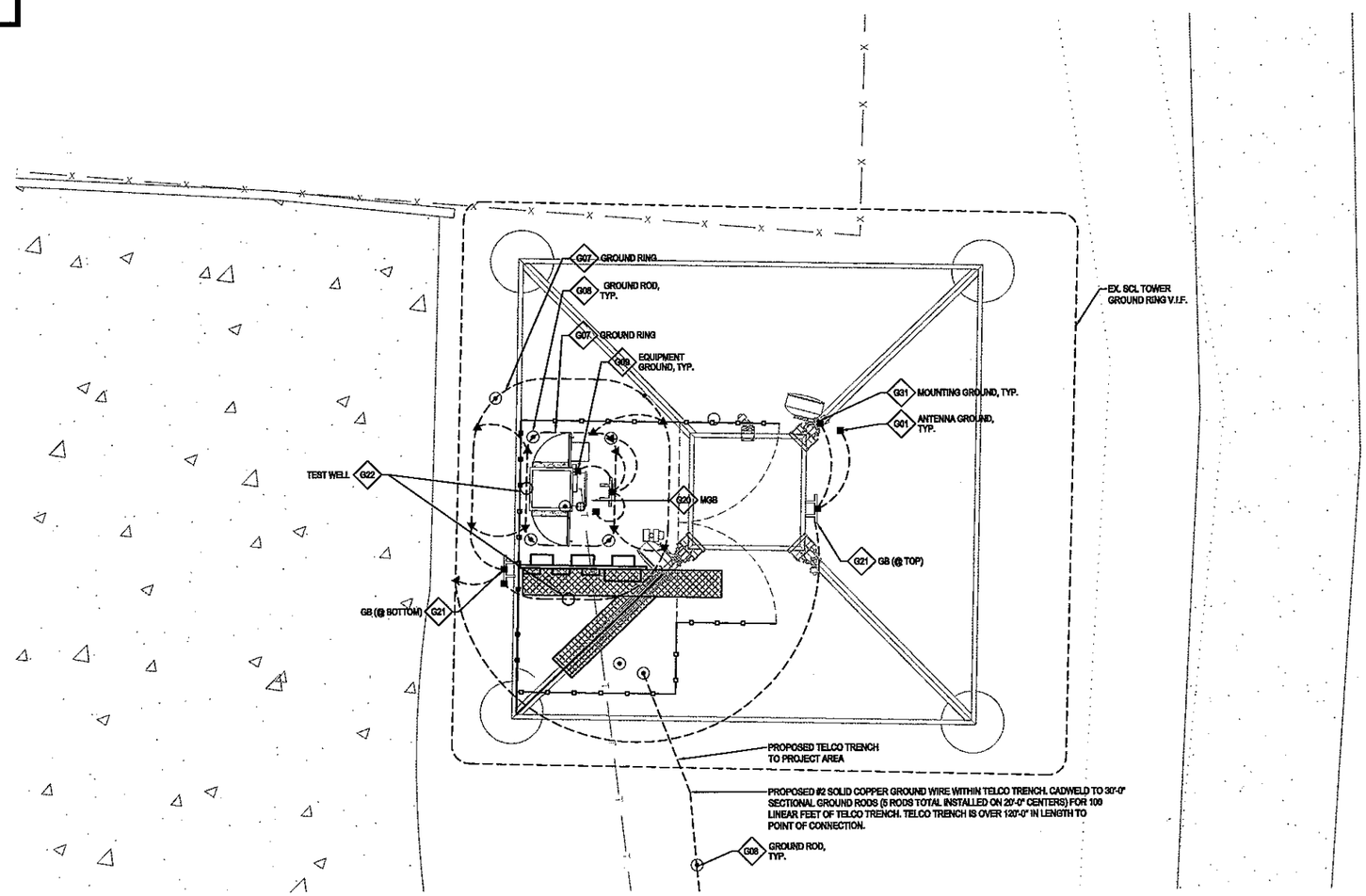

NOTES:

1. ALL EXPOSED GROUND LEADS GREATER THAN 18" IN LENGTH SHALL BE ENCASED IN ½"Ø FLEX PVC CONDUIT.
2. XIT RODS MAY BE REQUIRED IN PLACE OF COPPER CLAD STEEL GROUND ROD UNDER CERTAIN SOIL CONDITIONS, VERIFY WITH CONSTRUCTION MANAGER.
3. ALL STANDARDS, NOTES AND DRAWINGS ON ELECTRICAL SHEETS WERE PROVIDED BY CLEARWIRE. AN ELECTRICAL ENGINEER WAS NOT RETAINED TO COMPILE THE ASSOCIATED INFORMATION.

GROUNDING DIAGRAM

SCALE: 0 = 1'-0"

15

LDC
THE CIVIL ENGINEERING GROUP
Commercial Infrastructure Residential
14291 NE 200th St., #100
Woodinville, WA 98072
Ph. 425.806.1869
Fx. 425.482.2863
www.LDCcorp.com

clear w're® WiMAX

4400 CARILLON POINT
KIRKLAND, WA 98033

SCL PM#: 250509-3-601, SCL TOWER#: B13/16 S

CENTRAL PARK

WA-SEA522-B

12314 NE 65TH STREET
KIRKLAND, WA 98033

RELEASE	
DATE	
4/08/09	WIMAX
8/10/09	ISSUED FOR REVIEW

MARK E. VILLWOCK
STATE OF WASHINGTON
40008
REGISTERED PROFESSIONAL ENGINEER
8-13-09

LDC, INC.

SHEET TITLE: GROUNDING DIAGRAM

SHEET NUMBER: SEA522-B-E01

DRAWN BY: RM
CHECKED BY: MV

PLOT SCALE: 24x36 = 1:1 / 11x17 = 1:2