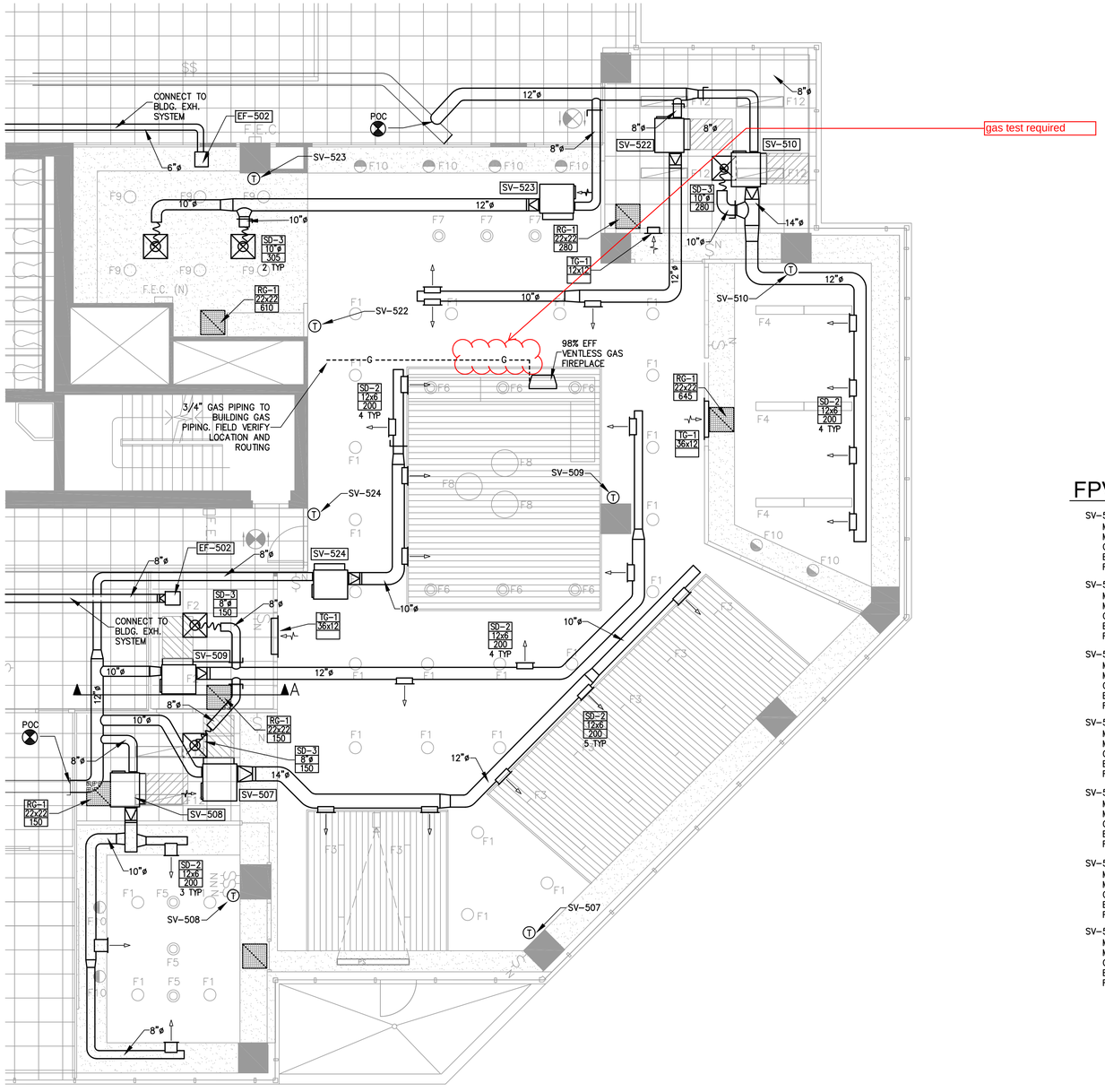

Building 3000 - HVAC Plan

Fifth Floor

Scale: 3/16" = 1'0"

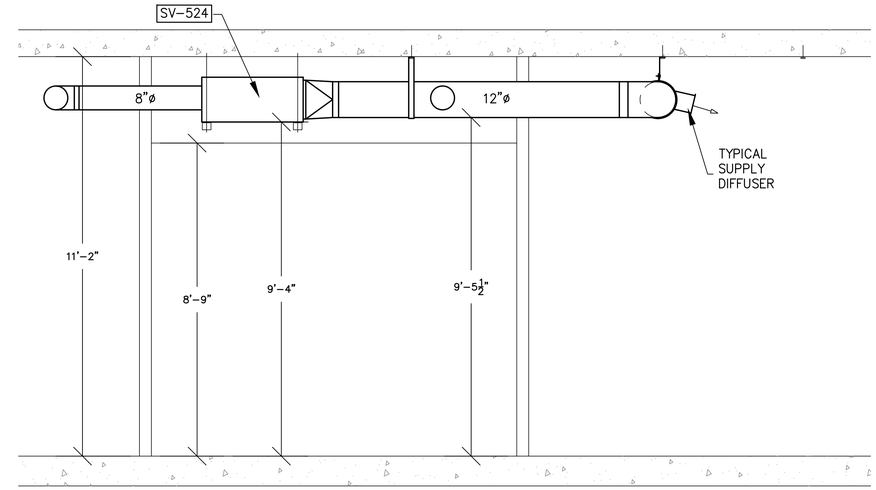

Section AA

Scale: 1/2" = 1'0"

FPVAV UNIT SCHEDULE

SV-507 (EXISTING)
MANUFACTURER: KREUGER
MODEL: QFV-512
CFM: 1,000
BOX SIZE: 5
REHEAT CAPACITY: 6.0 KW

SV-508 (EXISTING)
MANUFACTURER: KREUGER
MODEL: QFV-308
CFM: 425
BOX SIZE: 3
REHEAT CAPACITY: 3.0 KW

SV-509 (EXISTING)
MANUFACTURER: KREUGER
MODEL: QFV-410
CFM: 1200
BOX SIZE: 4
REHEAT CAPACITY: NA

SV-510 (EXISTING)
MANUFACTURER: KREUGER
MODEL: QFV-410
CFM:1200
BOX SIZE: 4
REHEAT CAPACITY: 5.0 KW

SV-522 (EXISTING)
MANUFACTURER: KREUGER
MODEL: LMHS
CFM: 615
BOX SIZE: 5
REHEAT CAPACITY: NA

SV-523 (EXISTING)
MANUFACTURER: KREUGER
MODEL: QFV-308
CFM: 615
BOX SIZE: 3
REHEAT CAPACITY: 4.0 KW

SV-524 (EXISTING)
MANUFACTURER: KREUGER
MODEL: QFV-308
CFM: 790
BOX SIZE: 3
REHEAT CAPACITY: 4.0 KW

AIR TERMINAL SCHEDULE

SD-2
MANUFACTURER: TITUS
MODEL: 350 RL
NECK SIZE: 12x6
DESCRIPTIONS: WALL MOUNTED DOUBLE DEFLECTION

SD-3
MANUFACTURER: TITUS
MODEL: MCD
NECK SIZE: AS INDICATED
DESCRIPTIONS: MODULAR CORE DIFFUSER (T-BAR OR HARD LID)

RG-1
MANUFACTURER: TITUS
MODEL: 50F
NECK SIZE: 22x22
DESCRIPTIONS: T-BAR & HARD LID MOUNT R.A. GRILLE

TG-1
MANUFACTURER: TITUS
MODEL: 350FL
NECK SIZE: AS INDICATED
DESCRIPTIONS: WALL MOUNTED FIXED BLADE TRANSFER GRILLE

EXHAUST FAN SCHEDULE

EF-501
MANUFACTURER: GREENHECK
MODEL: SP-B150
CFM: 150
SP: 0.33"
VOLTAGE: 120/60/1
WATTS: 129

EF-501
MANUFACTURER: GREENHECK
MODEL: SP-B350
CFM: 250
SP: 0.33"
VOLTAGE: 120/60/1
WATTS: 135

REVIEWED
By DLH
01/12/2012
CITY OF KIRKLAND
FIRE / BUILDING

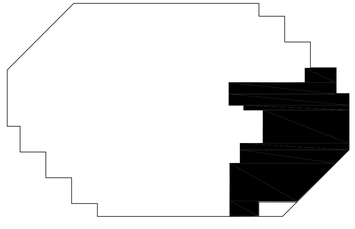

SITE PLAN

CARILLON PROPERTIES

0 5' 10' 20' 30'

JOB No.	2010-052
DRAWN	JWH
CHECKED	

06/30/2011	PERMIT DRAWING

ENVIROMECH
COMPLETE MECHANICAL CONTRACTORS
430 SW 153rd STREET
Burien, WA 98166
Tel: 206-762-1960
Fax: 206-762-1936

SINEGAL OFFICE REMODEL
CARILLON POINT
BUILDING 3000 - FLOOR 5
KIRKLAND, WASHINGTON

SHEET NO.
M-1