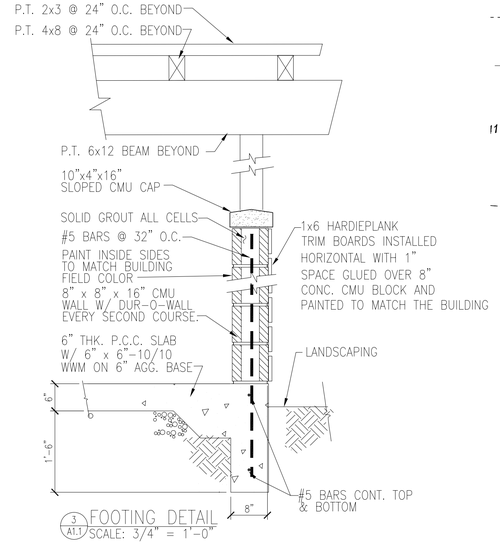


3 A1.1 FOOTING DETAIL
SCALE: 3/4" = 1'-0"

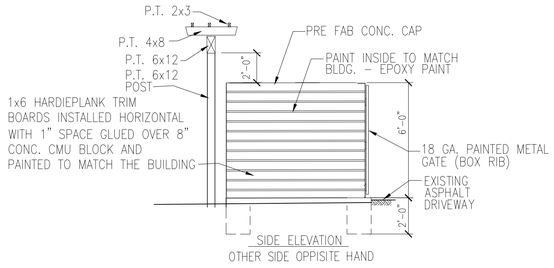


SIDE ELEVATION
OTHER SIDE OPPISITE HAND

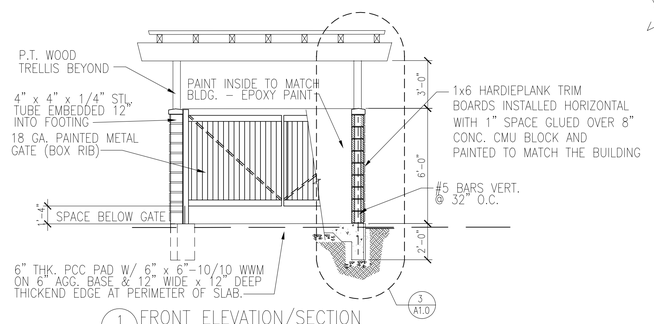


1 A1.0 FRONT ELEVATION/SECTION
SCALE: 1/4" = 1'-0"

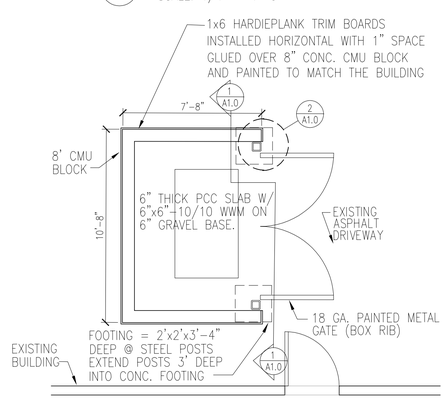


PLAN VIEW
SCALE: 1/4" = 1'-0"

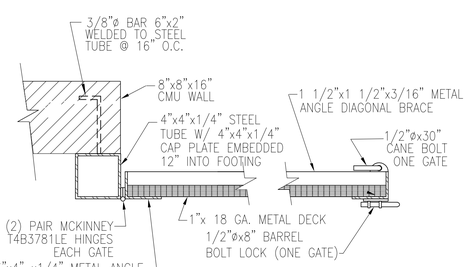


2 A1.1 JAMB DETAIL
SCALE: 3/4" = 1'-0"

A TRASH ENCLOSURE

EXISTING SITE PLAN
SCALE: 1" = 30'-0"

Revisions

Richard M. Swanson, Architect
7727 Canterwood Drive SE
Olympia, WA 98513
(360) 438-1145

| Drawn By | Checked By | Date | Project No. |
|---|---|---|---|
| MJC | RMS | 7-30-14 | |


LJB DESIGNS, LLC
111 MARKET ST NE #325
OLYMPIA WA 98501
P (360) 867-1945
F (360) 867-1956
E-MAIL: LJBDESIGNS@COMCAST.NET


Project
MADISON HOUSE BUILDING REMODEL
12215 NE 128th STREET
KIRKLAND, WA 98030

Drawing Title
SITE PLAN

Sheet No.
A1.0