ARCHER
CONSTRUCTION, INC
7855 South 206th Street, Kent, WA 98032
• Phone: 253-872-7222 •Fax: 253-872-7277

FIRE SPRINKLER EQUIPMENT SUBMITTAL

FOR

GoDaddy @ Carillon Pt. B3000

3300 Carillon Pt.
Kirkland, WA

Archer Job # S15-29

"THE INCH" QUICK RESPONSE AUTOMATIC SPRINKLERS MODEL GL5606 ONE INCH ADJUSTABLE CONCEALED PENDENT

GLOBE FIRE SPRINKLER CORPORATION

DESCRIPTION AND OPERATION

The Globe Quick Response GL5606 Adjustable Concealed Pendent Sprinkler has a low profile, aesthetically pleasing design. It provides sprinkler operation approximately six times faster than ordinary sprinklers and can be installed wherever standard concealed spray sprinklers are specified when allowed by the applicable standards. It offers the additional feature of greatly increased safety to life and should be used advisedly and under the direction of approving authorities having jurisdiction. The sprinkler is available with a nominal 1" of adjustment and a low profile cover plate assembly. All that is seen at the ceiling is a 3 5/16" diameter ceiling plate or an optional 2¾" diameter ceiling plate color finished to match the specifier's exact requirements. The GL Series Concealed Sprinkler may be virtually invisible as it does not interrupt the "smooth flow" of the ceiling. Globe's Concealed Sprinkler utilizes its 3mm frangible glass ampule which is located above the ceiling and concealed from view by the ceiling plate.

The provided protective cap needs to be removed in order to install the sprinkler with the proper wrench. The protective cap must be replaced on the sprinkler until the time the cover plate is to be installed. The "push on - screw off" designed cover plate is easily installed and with a nominal 1" inch of adjustment makes it easier to get a proper fit at the ceiling.

Operation of the sprinkler occurs when heat build up causes the solder holding the cover plate to the support shell to melt allowing the cover plate to fall clear. Continued heat build up causes the 3mm glass bulb to burst allowing the deflector to drop down and distribute water in an approved pattern to extinguish or control the fire.

TECHNICAL DATA

- See reverse side for Approvals and Specifications.
- Temperature Ratings -
  - 135°F (57°C) Sprinkler, 135°F (57°C) Cover Plate
  - 155°F (68°C) Sprinkler, 135°F (57°C) Cover Plate
  - 155°F (68°C) Sprinkler, 155°F (68°C) Cover Plate
  - 175°F (79°C) Sprinkler, 155°F (68°C) Cover Plate
  - 200°F (93°C) Sprinkler, 155°F (68°C) Cover Plate
- Water Working Pressure Rating - 175 psi (12 Bars)
- Factory tested hydrostatically to 500 psi (34 Bars)
- Maximum low temperature glass bulb rating is -67°F (-55°C)
- Frame - bronze • Deflector - brass • Screw - brass
- Bulb seat - brass • Spring - nickel alloy • Seal - teflon
- Bulb - glass with alcohol based solution, 3mm size
- Drop Pin - stainless steel
- Cover Plate - brass
- Upper Escutcheon Assembly - plated steel

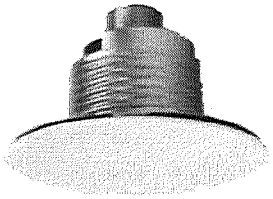

3 5/16" diameter plate

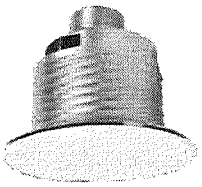

2 3/4" diameter plate

QUICK RESPONSE
WHITE ADJUSTABLE CONCEALED PENDENT

NOTE: Globe's wrench P/N 332765 must be used to install this sprinkler.

• SPRINKLER TEMPERATURE RATING/CLASSIFICATION and COLOR CODING

CLASSIFICATION	AVAILABLE SPRINKLER TEMPERATURES		BULB COLOR	N.F.P.A. MAXIMUM CEILING TEMPERATURE	
ORDINARY	135°F/155°F	57°C/68°C	ORANGE/RED	100°F	38°C
INTERMEDIATE	175°F/200°F	79°C/93°C	YELLOW/GREEN	150°F	66°C

4077 AIRPARK DRIVE, STANDISH, MICHIGAN 48658 (989) 846-4583 • FAX 989-846-9231

QUICK RESPONSE AUTOMATIC SPRINKLERS MODEL GL5606 ONE INCH ADJUSTABLE CONCEALED PENDENT

SPECIFICATIONS

NOMINAL "K" FACTOR		THREAD SIZE	LENGTH	FINISHES
5.6	(80 metric)	1/2" NPT	2 1/2" (6.4 cm)	Bright Chrome White Painted Bright Brass[1] Satin Chrome[1] Other Painted Finishes[1]

NOTE: METRIC CONVERSIONS ARE APPROXIMATE.

[1]FINISHES AVAILABLE ON SPECIAL ORDER. FOR PAINTED PLATES OTHER THAN WHITE, CONTACT GLOBE FOR ORDERING SPECIFICATIONS.

APPROVALS

STYLE	SIN MODEL	K FACTOR	**135°F (57°C) with plate 135°F (57°C)	155°F (68°C) with plate 135°F (57°C)	**155°F (68°C) with plate 155°F (68°C)	175°F (79°C) with plate 155°F (68°C)	200°F (93°C) with plate 155°F (68°C)	cULus	*FM	NYC-DOB MEA 101-92-E
Adjustable Concealed Pendent	GL5606	5.6	X	X	X	X	X	X	X	X

*FM APPROVED AS STANDARD RESPONSE
**NO FM APPROVALS

CROSS SECTIONS

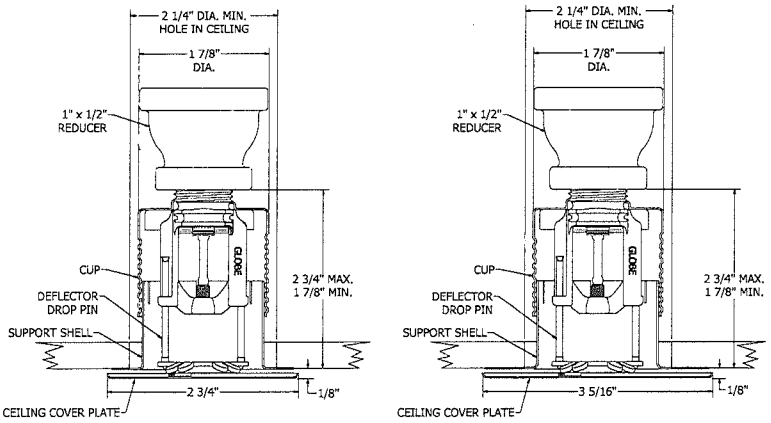

OPTIONAL COVER PLATE SIZE	WHITE 135°F PART #	WHITE 155°F PART #	CHROME 135°F PART #	CHROME 155°F PART #
2 3/4"	332726	332731	332724	332729
3 5/16"	332706	332711	332704	332709

ORDERING INFORMATION

SPECIFY

- Quantity • Model Number • Style
- Orifice • Thread Sizes • Temperature
- Finishes desired
- Quantity - Adjustable Concealed Wrenches - P/N 332765

GLOBE® PRODUCT WARRANTY

Globe agrees to repair or replace any of its own manufactured products found to be defective in material or workmanship for a period of one year from date of shipment.

For specific details of our warranty, please refer to Price List Terms and Conditions of Sale (Our Price List).

GLOBE FIRE SPRINKLER CORPORATION

4077 AIRPARK DRIVE, STANDISH, MICHIGAN 48658
989-846-4583 FAX 989-846-9231
1-800-248-0278 www.globesprinkler.com

MAY 2012 PRINTED U.S.A. BULLETIN GL5606 REV#6

* USE AT WOOD SLAT CEILING

VIKING®

TECHNICAL DATA

MIRAGE® STANDARD AND QR CONCEALED PENDENT SPRINKLER VK462 AND HP SPRINKLER VK463 (K5.6)

The Viking Corporation, 210 N Industrial Park Drive, Hastings MI 49058
Telephone: 269-945-9501 Technical Services: 877-384-5464 Fax: 269-818-1680 Email: techsvcs@vikingcorp.com

1. DESCRIPTION

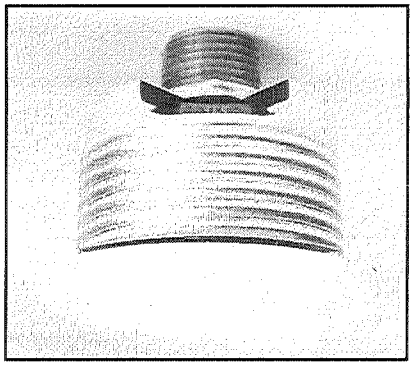

Viking Mirage® Standard and Quick Response Concealed Pendent Sprinkler VK462 and HP Sprinkler VK463 are thermosensitive glass-bulb spray sprinklers designed for installation on concealed pipe systems where the appearance of a smooth ceiling is desired.

The sprinkler is pre-assembled with a threaded adapter for installation with a low-profile cover assembly that provides up to ½" (12.7 mm) of vertical adjustment. The two-piece design allows installation and testing of the sprinkler prior to installation of the cover plate. The "push-on", "thread-off" design of the concealed cover plate assembly allows easy installation of the cover plate after the system has been tested and the ceiling finish has been applied. The cover assembly can be removed and reinstalled, allowing temporary removal of ceiling panels without taking the sprinkler system out of service or removing the sprinkler. The Electroless Nickel PTFE (ENT) coating has been investigated for installation in corrosive atmospheres and is cULus Listed as corrosion resistant as indicated in the Approval Charts. The ENT finish is only available for the sprinkler assembly, the cover plate is not plated.

Viking Technical Data may be found on The Viking Corporation's Web site at http://www.vikinggroupinc.com. The Web site may include a more recent edition of this Technical Data Page.

2. LISTINGS AND APPROVALS

cULus Listed: Category VNIV
FM Approval: Class 2015
NYC Approved: MEA 89-92-E, Volume 32
VdS Approved: Certificate G4080021
LPCB Approved: Ref. No. 096e/12
CE Certified: Standard EN 12259-1, EC-certificate of conformity 0832-CPD-2032
Refer to Approval Chart 1 Design Criteria for cULus Listing requirements, and refer to Approval Chart 2 and Design Criteria on page for FM Approval requirements that must be followed.

3. TECHNICAL DATA

Specifications:
Available since 2006.
Minimum Operating Pressure: 7 psi (0.5 bar)*
Maximum Working Pressure: Sprinkler VK463 is rated for use with water working pressures ranging from the minimum 7 psi (0.5 bar) up to 250 psi (17.2 bar) for high-pressure systems. High-pressure (HP) sprinklers can be identified by locating "250" stamped on the deflector. Sprinkler VK462 is rated to a maximum 175 psi (12 bar) wwp.
Factory tested hydrostatically to 500 psi (34.5 bar)
Thread size: 1/2" (15 mm) NPT
Nominal K-Factor: 5.6 U.S. (80.6 metric†)
Glass-bulb fluid temperature rated to -65°F (-55°C)
Patents Pending

*cULus Listing, FM Approval, and NFPA 13 installs require a minimum of 7 psi (0.5 bar). The minimum operating pressure for LPCB and CE Approvals ONLY is 5 psi (0.35 bar).

†Metric K-factor measurement shown is when pressure is measured in Bar. When pressure is measured in kPa, divide the metric K-factor shown by 10.0.

Material Standards:
Sprinkler Body: Brass UNS-C84400
Deflector: Copper UNS-C19500 for Sprinkler VK462
Phosphor Bronze UNS-C51000 for Sprinkler VK463
Deflector Pins: Stainless Steel Alloy
Bulb: Glass, nominal 3 mm diameter
Pip Cap and Insert Assembly: Copper UNS-C11000 and Stainless Steel UNS-S30400
Button: Brass UNS-C36000
Screws: 18-8 Stainless Steel
Belleville Spring Sealing Assembly: Nickel Alloy, coated on both sides with Teflon Tape
Yoke: Phosphor Bronze UNS-C51000
Cover Adapter: Cold Rolled Steel UNS-G10080, Finish: Clear Chromate over Zinc Plating

Cover Assembly Materials:
Cover: Copper UNS-C11000
Base: Brass UNS-C26000 or UNS-C26800
Springs: Nickel Alloy
Solder: Eutectic

Ordering Information: (Also refer to the current Viking price list.)

VIKING®	TECHNICAL DATA	MIRAGE® STANDARD AND QR CONCEALED PENDENT SPRINKLER VK462 AND HP SPRINKLER VK463 (K5.6)

The Viking Corporation, 210 N Industrial Park Drive, Hastings MI 49058
Telephone: 269-945-9501 Technical Services: 877-384-5464 Fax: 269-818-1680 Email: techsvcs@vikingcorp.com

Viking Mirage® Standard and Quick Response Concealed Pendent Sprinklers and Cover Plate Assemblies must be ordered separately:
Sprinkler: Base Part No. VK462 - 13503A for Brass finish and 13503JN for ENT finish. VK463 - HP Base Part No. 13667A
Specify sprinkler temperature rating by adding the appropriate suffix for the temperature rating to the base part number:
Temperature Suffix: 155 °F (68 °C) = B, 175 °F (79 °C) = D, 200 °F (93 °C) = E
For example, sprinkler VK463 with a 155 °F (68 °C) temperature rating = 13667AB.
Cover Plate Assembly: Base Part No. 13504 (2-3/4" diameter), Base Part No. 13642 (3-5/16" diameter), or Base Part No. 15394 (square cover plate, 3-5/16" diameter)
Specify finish and temperature rating of the cover plate assembly by adding the appropriate suffixes for the finish and the cover temperature rating to the base part number:
Finish Suffix: Polished Chrome = F, Brushed Chrome = F-/B, Bright Brass = B, Antique Brass = B-/A, Brushed Brass = B-/B, Brushed Copper = E-/B, Painted White = M-/W, Painted Ivory = M-/I, Painted Black = M-/B
Temperature Suffix: 135 °F (57 °C) UL (139 °F (59 °C) FM and LPCB) = A, 165 °F (74 °C) = C
For example, cover 13504 with a Polished Chrome finish and a 165 °F (74 °C) temperature rating = 13504FC.

Note: Square cover plate 15394 cULus Listing is for the 135 °F (57 °C) temperature rated cover plate only. Refer to the Approval Chart.

Available Finishes And Temperature Ratings: Refer to Table 1.
Accessories: (Also refer to the "Sprinkler Accessories" section of the Viking data book.)
Sprinkler Wrenches:**
A. Heavy Duty Wrench Part No. 14047W/B (available since 2006), or
B. Head Cabinet Wrench Part No. 14031*** (available since 2006)
C. Optional Concealed Cover Plate Installer Tool Part No. 14412 for cover 13504, or Part No. 14867 for the large diameter cover (available since 2007)

**Requires a ½" ratchet (not available from Viking). ***Optional for removal of the protective cap. Ideal for sprinkler cabinets.

Sprinkler Cabinet: Part No. 01731A (available since 1971)

4. INSTALLATION
Refer to appropriate NFPA Installation Standards.

5. OPERATION
During fire conditions, when the temperature around the sprinkler approaches its operating temperature, the cover plate detaches. Continued heating of the exposed sprinkler causes the heat-sensitive liquid in the glass bulb to expand and the bulb to shatter, releasing the yoke, pip-cap and sealing spring assembly. Water flowing through the sprinkler orifice strikes the sprinkler deflector, forming a uniform spray pattern to extinguish or control the fire.

6. INSPECTIONS, TESTS AND MAINTENANCE
Refer to NFPA 25 for Inspection, Testing and Maintenance requirements.

7. AVAILABILITY
Viking Sprinklers VK462 and VK463 are available through a network of domestic and international distributors. See The Viking Corporation web site for the closest distributor or contact The Viking Corporation.

8. GUARANTEE
For details of warranty, refer to Viking's current list price schedule or contact Viking directly.

TABLE 1: AVAILABLE SPRINKLER TEMPERATURE RATINGS AND FINISHES

Sprinkler Temperature Classification	Sprinkler Nominal Temperature Rating[1]	Maximum Ambient Ceiling Temperature[2]	Temperature Rating of Cover Assembly (Required)	Bulb Color
Ordinary	155 °F (68° C)	100 °F (38 °C)	135 °F (57 °C) cULus 139 °F (59 °C) FM and LPCB	Red
Intermediate	175 °F (79 °C)	150 °F (65 °C)	165 °F (74 °C)	Yellow
Intermediate	200 °F (93 °C)	150 °F (65 °C)	165 °F (74 °C)	Green

Cover Plate Finishes: Polished Chrome, Brushed Chrome, Bright Brass, Antique Brass, Brushed Brass, Brushed Copper, Painted White, Painted Ivory, or Painted Black
Sprinkler Finishes: Brass and ENT
Corrosion Resistant Coatings[3]: ENT

Footnotes

[1] The sprinkler temperature rating is stamped on the sprinkler deflector.
[2] Based on NFPA-13. Other limits may apply, depending on fire loading, sprinkler location, and other requirements of the Authority Having Jurisdiction. Refer to specific installation standards.
[3] The corrosion resistant coatings have passed the standard corrosion test required by the approving agencies indicated in the Approval Charts. These tests cannot and do not represent all possible corrosive environments. Prior to installation, verify through the end-user that the coatings are compatible with or suitable for the proposed environment. For automatic sprinklers, the ENT coating is applied to all exposed exterior surfaces, including the waterway, but the Belleville spring is exposed.

VIKING®

TECHNICAL DATA

MIRAGE® STANDARD AND QR CONCEALED PENDENT SPRINKLER VK462 AND HP SPRINKLER VK463 (K5.6)

The Viking Corporation, 210 N Industrial Park Drive, Hastings MI 49058
Telephone: 269-945-9501 Technical Services: 877-384-5464 Fax: 269-818-1680 Email: techsvcs@vikingcorp.com

Approval Chart 1 (UL)

Mirage® Concealed Pendent Sprinklers VK462 and VK463

Sprinkler Temperature Rating
Cover Plate Temperature Rating
AW1 Cover Plate Finish KEY

Sprinkler Base Part No.[1]	SIN	NPT Thread Size		Nominal K-Factor		Maximum Water Working Pressure	Listings and Approvals[4] (Refer also to Design Criteria)				
		Inch	mm	U.S.	metric[2]		cULus[5]	NYC	VdS[7]	LPCB	CE
Standard Response Applications											
13503A	VK462	1/2"	15	5.6	80.6	175 psi (12 bar)	--	--	AY1, CZ1	AY1, BZ1	AY1, CZ1[8]
Quick Response Applications											
13503A	VK462	1/2"	15	5.6	80.6	175 psi (12 bar)	AV1, BX1	AV1, BW1[6]	--	--	--
13503JN[11]	VK462	1/2"	15	5.6	80.6	175 psi (12 bar)	AV1, BX1	AV1, BW1[6]	--	--	--
13667A	VK463	1/2"	15	5.6	80.6	250 psi (17.2 bar)[3]	AV1, BX1	AV1, BW1[6]	--	--	--

Sprinkler Temperature Ratings

A - 155 °F (68 °C)
B - 175 °F (79 °C) and 200 °F (93 °C)
C - 200 °F (93 °C)

Cover Plate Assembly Temperature Ratings[9]

V - 135 °F (57 °C) cULus Listed cover 13504[1], 13642[1] (large diameter), or 15394[1] (square cover plate)
W - 165 °F (74 °C) cover 13504[1] or 13642[1] (large diameter)
X - 165 °F (74 °C) cover 13504[1], or 13642[1] (large diameter)
Y - 135 °F (57 °C) cover 13504[1] *LPCB Approved as 139 °F (59 °C)*
Z - 165 °F (74 °C) cover 13504[1]

Cover Plate Assembly Finishes[10]

1 - Polished Chrome, Brushed Chrome, Bright Brass, Antique Brass, Brushed Brass, Brushed Copper, Painted White, Painted Ivory, or Painted Black

Footnotes

[1] Part number shown is the base part number. For complete part number, refer to current Viking price list schedule.
[2] Metric K-factor measurement shown is when pressure is measured in Bar. When pressure is measured in kPa, divide the metric K-factor shown by 10.0.
[3] The Water Working Pressure rating is stamped on the deflector.
[4] This chart shows the listings and approvals available at the time of printing. Other approvals may be in process. Check with the manufacturer for any additional approvals.
[5] Listed by Underwriter's Laboratories for use in the U.S. and Canada.
[6] Accepted for use, City of New York Department of Buildings, MEA Number 89-92-E, Vol. 32.
[7] VdS Approved, standards VdS 2344:2005-12, VdS 2100-25:2008-01, and EN 12259-1:1999 + A1:2001 + A2:2004 + A3:2006, Certificate G4080021.
[8] CE Certified, Standard EN 12259-1, EC-certificate of conformity 0832-CPD-2032.
[9] The 135/139 °F cover has an orange label. The 165 °F (74 °C) cover has a white label.
[10] Painted finish consists of Polyester Baked Enamel. Other paint colors are available on request with the same listings as the standard paint colors. Listings and approvals apply for any paint manufacturer. Contact Viking for additional information.
[11] cULus Listed as corrosion resistant.

NOTE: Custom colors are indicated on a label inside the cover assembly. Refer to Figure 1.

VIKING®	TECHNICAL DATA	MIRAGE® STANDARD AND QR CONCEALED PENDENT SPRINKLER VK462 AND HP SPRINKLER VK463 (K5.6)

The Viking Corporation, 210 N Industrial Park Drive, Hastings MI 49058
Telephone: 269-945-9501 Technical Services: 877-384-5464 Fax: 269-818-1680 Email: techsvcs@vikingcorp.com

DESIGN CRITERIA - UL
(Also refer to Approval Chart 1)

cULus Listing Requirements:

Mirage® Concealed Pendent Sprinklers VK462 and VK463 are cULus Listed as quick response for installation in accordance with the latest edition of NFPA 13 for standard coverage pendent spray sprinklers as indicated below.

- For hazard occupancies up to and including Ordinary Hazard, Group II.
- Protection areas and maximum spacing shall be in accordance with the tables provided in NFPA 13. Maximum spacing allowed is 15 ft. (4.6 m).
- Minimum spacing allowed is 6 ft. (1.8 m) unless baffles are installed in accordance with NFPA 13.
- Minimum distance from walls is 4 in. (102 mm).
- Maximum distance from walls shall be no more than one-half of the allowable distance between sprinklers. The distance shall be measured perpendicular to the wall.
- The sprinkler obstruction rules contained in NFPA 13 for standard coverage pendent spray sprinklers must be followed.

NOTE: Concealed sprinklers must be installed in neutral or negative pressure plenums only.

VdS Approval Requirements:

a) The sprinkler can be installed in a concrete ceiling (massive ceiling) or in a false ceiling made of light materials.

b) This sprinkler is deflector fixed type and can be only activated by heat. The housing is not tight.

c) Follow installation guidelines of current standards, CEA4001VdS and EN12845. These sprinklers can only be installed in LH and OH occupancies, except in OH4.

NOTES: Due to the design the sprinkler type 'Domed-CCP' shall not be installed in false ceilings in which the false ceiling space is protected by a water extinguishing system.

Due to the design the sprinkler type 'Domed-CCP' shall not be installed in false ceilings in which during a fire the pressure above the false ceiling may be assumed to be higher than the pressure below the false ceiling.

The criterion for the dropping of the cover relevant for this approval is heat.

Steps of installation:

1. Prepare the sprinkler key.
2. Remove the plastic cover.
3. Hold the sprinkler with the wrench and fasten it.
4. Replace the plastic cover and do not remove until the cover is installed.

IMPORTANT: Always refer to Bulletin Form No. F_091699 - Care and Handling of Sprinklers. Also refer to page SR1-3 or QR1-3 for general care, installation, and maintenance information. Viking sprinklers are to be installed in accordance with the latest edition of Viking technical data, the appropriate standards of NFPA, LPCB, APSAD, VdS or other similar organizations, and also with the provisions of governmental codes, ordinances, and standards, whenever applicable.

Identification of Custom Paint Color:
All custom color painted cover plates will have an identifying label affixed to the inside of the cover that indicates custom color and will have a representative sample (a paint dot) of the paint on the label.

Figure 1: Identification of Custom Paint Color for Concealed Covers

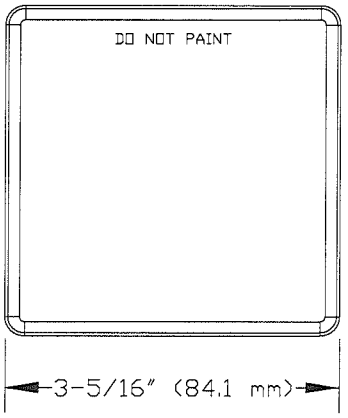

Figure 2: Square Cover Assembly 15394

VIKING®

TECHNICAL DATA

MIRAGE® STANDARD AND QR CONCEALED PENDENT SPRINKLER VK462 AND HP SPRINKLER VK463 (K5.6)

The Viking Corporation, 210 N Industrial Park Drive, Hastings MI 49058
Telephone: 269-945-9501 Technical Services: 877-384-5464 Fax: 269-818-1680 Email: techsvcs@vikingcorp.com

Approval Chart 2 (FM)

Mirage® Standard Response Concealed Pendent Sprinkler VK462

Sprinkler Temperature Rating
Cover Plate Temperature Rating
AW1 ← Cover Plate Finish KEY

Sprinkler Base Part No.[1]	SIN	NPT Thread Size		Nominal K-Factor		Maximum Water Working Pressure	FM Approvals[3] (Refer also to Design Criteria below.)
		Inch	mm	U.S.	metric[2]		
13503A	VK462	1/2"	15	5.6	80.6	175 psi (12 bar)	AW1, BX1

Sprinkler Temperature Ratings	Cover Plate Assembly Temperature Ratings[4]	Cover Plate Assembly Finishes[5]
A - 155 °F (68 °C) B - 175 °F (79 °C) and 200 °F (93 °C)	W - 139 °F (59 °C) cover 13504[1], 13642[1] (large diameter), or 15394[1] (square cover plate) X - 165 °F (74 °C) cover 13504[1], 13642[1] (large diameter), or 15394[1] (square cover plate)	1 - Polished Chrome, Brushed Chrome, Bright Brass, Antique Brass, Brushed Brass, Brushed Copper, Painted White, Painted Ivory, or Painted Black

Footnotes

[1] Part number shown is the base part number. For complete part number, refer to current Viking price list schedule.

[2] Metric K-factor measurement shown is when pressure is measured in Bar. When pressure is measured in kPa, divide the metric K-factor shown by 10.0.

[3] This chart shows the FM Approvals available at the time of printing. Other approvals may be in process. Check with the manufacturer for any additional approvals.

[4] The 139 °F (59 °C) cover has an orange label. The 165 °F (74 °C) cover has a white label.

[5] Painted finish consists of Polyester Baked Enamel. Other paint colors are available on request with the same listings as the standard paint colors. Listings and approvals apply for any paint manufacturer. Contact Viking for additional information.

NOTE: Custom colors are indicated on a label inside the cover assembly. Refer to Figure 1.

DESIGN CRITERIA - FM

(Also refer to Approval Chart 2 above.)

FM Approval Requirements:

Viking Concealed Pendent Sprinkler VK462 is FM Approved as a standard response **Non-Storage** concealed pendent sprinkler as indicated in the FM Approval Guide. For specific application and installation requirements, reference the latest applicable FM Loss Prevention Data Sheets (including Data Sheet 2-0). FM Global Loss Prevention Data Sheets contain guidelines relating to, but not limited to: minimum water supply requirements, hydraulic design, ceiling slope and obstructions, minimum and maximum allowable spacing, and deflector distance below the ceiling.

NOTE: The FM installation guidelines may differ from cULus and/or NFPA criteria.

IMPORTANT: Always refer to Bulletin Form No. F_091699 - Care and Handling of Sprinklers. Also refer to page SR1-3 for general care, installation, and maintenance information. Viking sprinklers are to be installed in accordance with the latest edition of Viking technical data, the appropriate standards of NFPA, FM Global, LPCB, APSAD, VdS or other similar organizations, and also with the provisions of governmental codes, ordinances, and standards, whenever applicable.

The Viking Corporation, 210 N Industrial Park Drive, Hastings MI 49058
Telephone: 269-945-9501 Technical Services: 877-384-5464 Fax: 269-818-1680 Email: techsvcs@vikingcorp.com

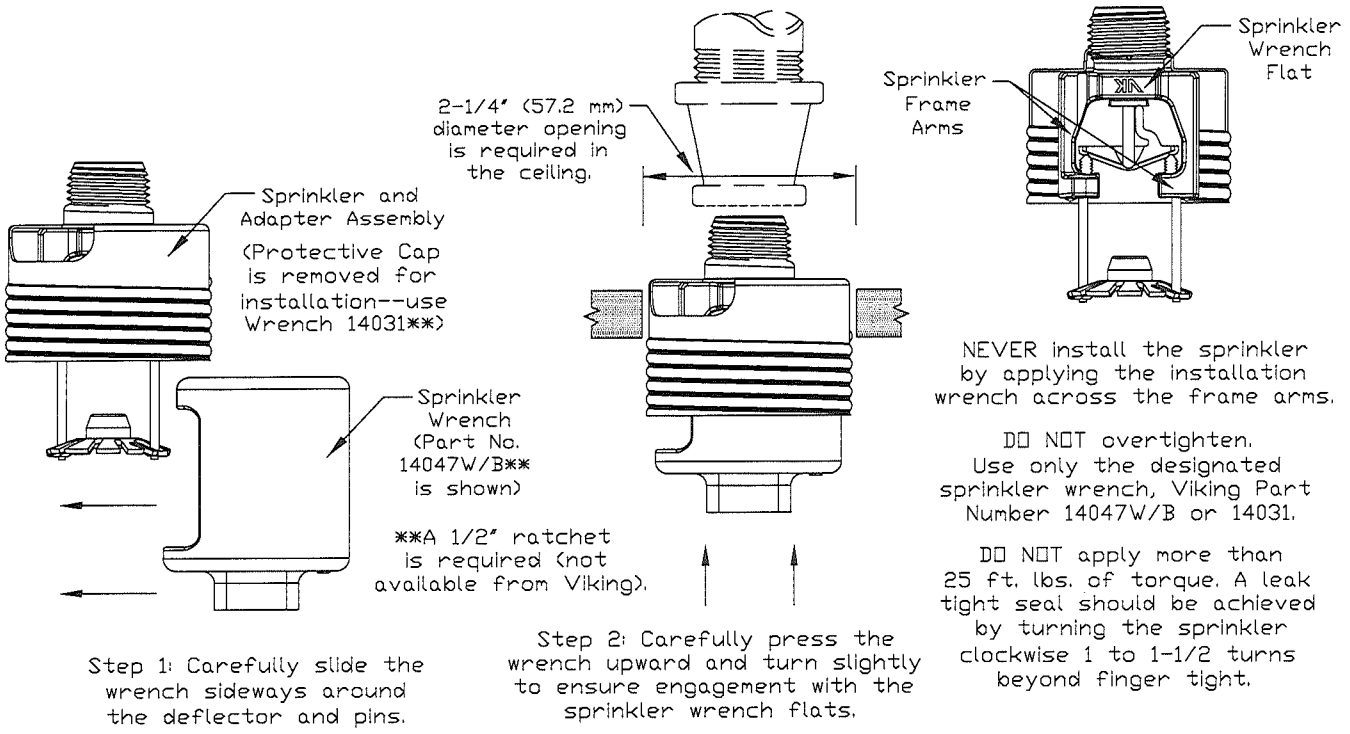

Figure 3: **Sprinkler Installation and Correct Use of Wrenches**

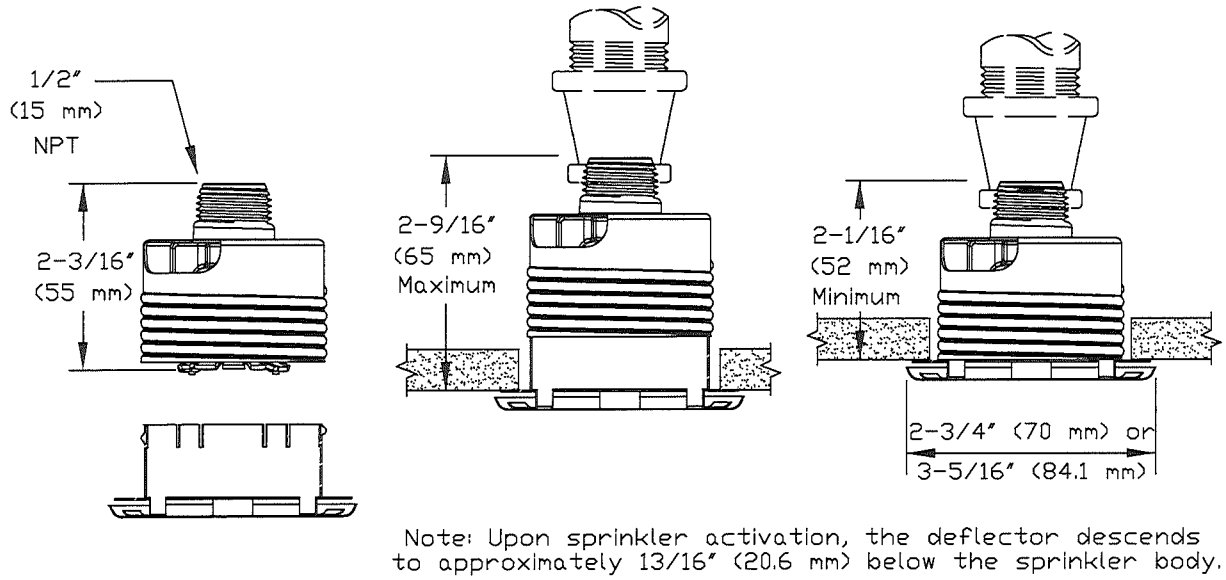

Figure 4: **Sprinkler Dimensions and Cover Installation**

Bulletin 014 Rev. L

Model F1FR Series Quick Response Standard Spray

Model F1FR56 Sprinkler Types
Standard Upright
Standard Pendent
Conventional
Vertical Sidewall
Horizontal Sidewall

Model F1FR56 Recessed Sprinkler Types
Standard Pendent/F1/F2/FP
Horizontal Sidewall

Model F1FR56 Concealed Sprinkler Types
Standard Pendent

Model F1FR42, F1FRXLH & F1FR28 Sprinkler Types
Standard Upright
Standard Pendent

Model F1FR42, F1FRXLH & F1FR28 Recessed Sprinkler Types
Standard Pendent

Model F1FR56LL & F1FR42LL Low Lead Sprinkler Types*
Standard Pendent
Less than 0.25% Lead Content

Listing & Approvals
1. Underwriters Laboratories Inc. and Certified for Canada (cULus).
2. Factory Mutual Approvals (FM)
3. Loss Prevention Council (LPCB, UK)
4. VdS Schadenverhütung GmbH
5. *NSF Certified to NSF/ANSi Standard 61 Annex G
6. EC Certificate: 0786-CPD-40239 (RA1414), 0786-CPD-40251 (RA1425), 0786-CPD-40252 (RA1475)

UL Listing Category
Sprinklers, Automatic & Open (VNIV)
Quick Response Sprinkler

Product Description
Reliable Models F1FR56, F1FR56LL, F1FR42, F1FR42LL, F1FRXLH & F1FR28 Series Sprinklers are quick response sprinklers which combine the durability of a standard sprinkler with the attractive low profile of a decorative sprinkler.

The Models F1FR56, F1FR56LL, F1FR42, F1FR42LL, F1FRXLH & F1FR28 Series Recessed automatic sprinklers utilize a 3.0 mm frangible glass bulb. These sprinklers have demonstrated response times in laboratory tests which are five to ten times faster than standard response sprinklers. This quick response enables the Model F1FR56, F1FR56LL, F1FR42, F1FR42LL, F1FRXLH & F1FR28 Series sprinklers to apply water to a fire much faster than standard sprinklers of the same temperature rating.

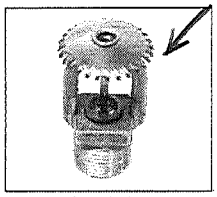
Upright

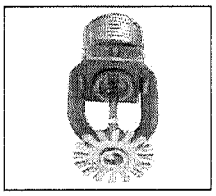
Pendent

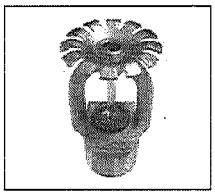
Conventional

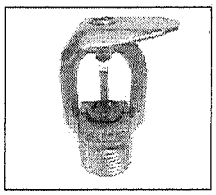
Vertical Sidewall

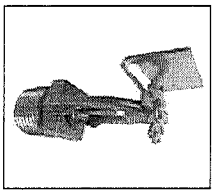
Horizontal Sidewall

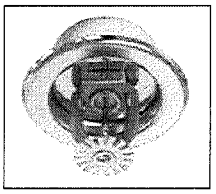
Recessed Pendent/F1/F2

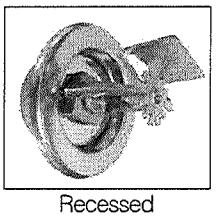
Recessed Horizontal Sidewall

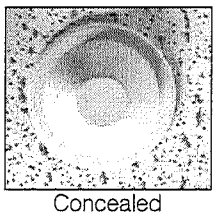
Concealed Pendent

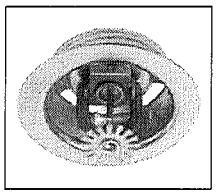
Recessed Pendent/FP

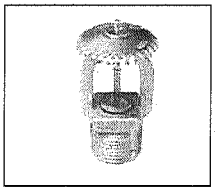
XLH Upright

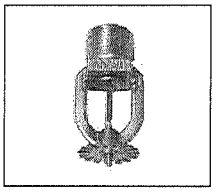
XLH Pendent

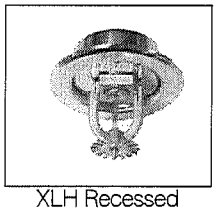
XLH Recessed Pendent F1/F2

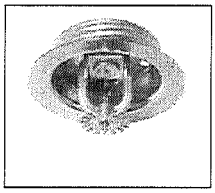
XLH Recessed Pendent FP

The glass bulb consists of an accurately controlled amount of special fluid hermetically sealed inside a precisely manufactured glass capsule. This glass bulb is specially constructed to provide fast thermal response.

At normal temperatures, the glass bulb contains the fluid in both the liquid and vapor phases. The vapor phase can be seen as a small bubble. As heat is applied, the liquid expands, forcing the bubble smaller and smaller as the liquid pressure increases. Continued heating forces the liquid to push out against the bulb, causing the glass to shatter, opening the waterway and allowing the deflector to distribute the discharging water.

Reliable Automatic Sprinkler Co., Inc., 103 Fairview Park Drive, Elmsford, New York 10523

Application

Quick response sprinklers are used in fixed fire protection systems: Wet, Dry, Deluge or Preaction. Care must be exercised that the orifice size, temperature rating, deflector style and sprinkler type are in accordance with the latest published standards of the National Fire Protection Association or the approving Authority Having Jurisdiction. Quick response sprinklers are intended for installation as specified in NFPA 13. Quick response sprinklers and standard response sprinklers should not be intermixed.

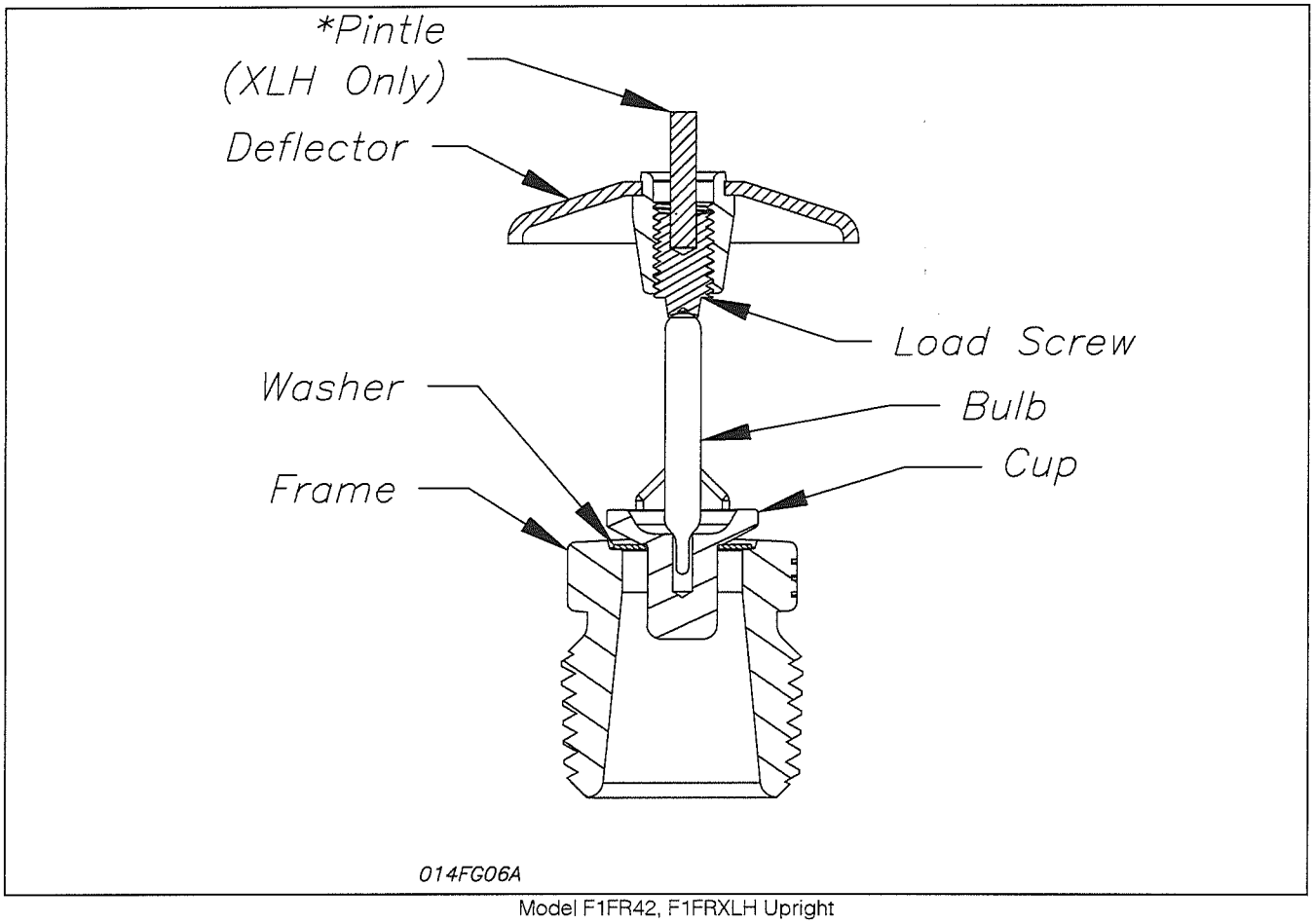

Model F1FR42, F1FRXLH Upright

Technical data:

Models	Discharge Coefficient	Response	Thread Size	Max. Working Pressure	Min. Working Pressure	Temperature Rating	Finish
F1FR56 **F1FR56LL[1]	K 5.6	Quick Response	1/2" NPT (R1/2)	175 PSI	7 PSI	See "Temperature Ratings" Table.	See "Finish Table"
F1FR42 **F1FR42LL[1] F1FRXLH	K 4.2						
F1FR28	K 2.8						

[1] Low Lead Sprinklers available only with Temperature Rating 200°F/93°C

Material Data:

Frame	Deflector	Load Screw	*Pintle	Cup	Washer	Bulb
DZR Brass QM Brass **Low Lead Brass	CDA Alloy 260, CDA Alloy 220 or CDA Alloy510	CDA Alloy 360 or CDA Alloy 544	CDA Alloy 360 or CDA Alloy 544	CDA Alloy 651 or CDA Alloy 693	Nickel Alloy 440 or Alloy 360 coated with PTFE Adhesive Tape	Glass

Model F1FR56, Upright, Pendent & Conventional Sprinklers
Model F1FR42, F1FRXLH & F1FR28 Upright & Pendent Sprinklers

Installation Wrench: Model D Sprinkler Wrench

Installation Data:

Nominal Orifice	Thread	Nominal K Factor		Sprinkler	Approval	Sprinkler Identification Number (SIN)	
	Size	US	Metric	Height	Organization	Upright	Pendent
Standard-Upright (SSU) and Pendent Deflectors Marked to Indicate Position							
1/2" (15mm) [1]	1/2" NPT (R1/2)	5.6	80	2.25" (57mm)	1, 2, 3, 4, 6	RA1425[1][2][3][4]	RA1414[1][2][3][4]
7/16" (10mm)	1/2" NPT (R1/2)	4.2	60	2.25" (57mm)	1	RA1423[1][4]	RA1413[4]
3/8" (10mm)	1/2" NPT (R1/2)	2.8	40	2.25" (57mm)	1	RA1421[1][4]	RA1411[4]
Conventional-Install in Upright or Pendent Position							
15mm [1]	1/2" NPT (R1/2)	5.6	80	57mm	3, 4, 6	RA1475[3]	

[1] cULus listed corrosion resistant (Polyester coated) sprinkler.
[2] Polyester coated FM approved sprinkler.
[3] Polyester coated LPCB & VdS approved sprinkler RA1425, RA1414 & RA1475.
[4] Electroless Nickel PTFE (Teflon®)* Plated - cULus listed Corrosion Resistant

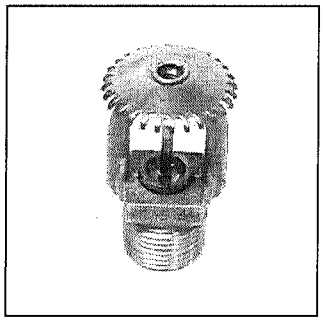

Upright

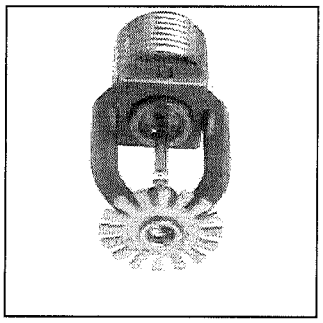

Pendent

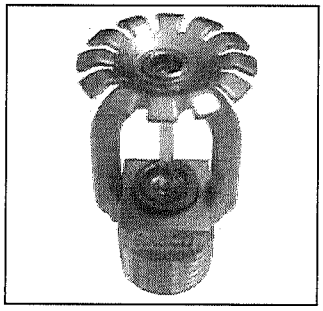

Conventional

Model F1FR56LL & F1FR42LL Pendent Sprinklers

Installation Wrench: Model D Sprinkler Wrench

Installation Data:

Nominal Orifice	Thread	Nominal K Factor		Sprinkler	Approval	Sprinkler Identification Number (SIN)
	Size	US	Metric	Height	Organization	Pendent
Standard-Pendent Deflectors Marked to Indicate Position						
1/2" (15mm) [1]	1/2" NPT (R1/2)	5.6	80	2.25" (57mm)	1, 5	RA1415
7/16" (11mm)	1/2" NPT (R1/2)	4.2	60	2.25" (57mm)	1, 5	RA1410

[1] cULus listed corrosion resistant (Polyester coated) sprinkler.

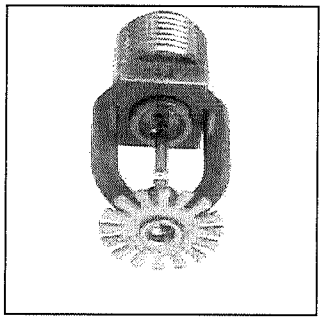

*DuPont Registered Trademark

Model F1FR56, F1FR42, F1FRXLH & F1FR28 Quick Response Recessed Pendent Sprinkler[1]

Installation Wrench: Model GFR2 Sprinkler Wrench

Installation Data:

Nominal Orifice	Thread Size	K Factor		Sprinkler Height	Sprinkler Identification Number (SIN)
		US	Metric		
1/2" (15mm)	1/2" NPT(R½)	5.6	80	2.25" (57mm)	RA1414
7/16" (10mm)	1/2" NPT (R1/2)	4.2	60	2.25" (57mm)	RA1413
3/8" (10mm)	1/2" NPT (R1/2)	2.8	40	2.25" (57mm)	RA1411

[1] Refer to escutcheon data table for approvals & dimensions

Model F1FR56LL & F1FR42LL Quick Response Recessed Pendent Sprinkler[1]

Installation Wrench: Model GFR2 Sprinkler Wrench

Installation Data:

Nominal Orifice	Thread Size	K Factor		Sprinkler Height	Sprinkler Identification Number (SIN)
		US	Metric		
1/2" (15mm)	1/2" NPT(R½)	5.6	80	2.25" (57mm)	RA1415
7/16" (10mm)	1/2" NPT (R1/2)	4.2	60	2.25" (57mm)	RA1410

[1] Refer to escutcheon data table for approvals & dimensions

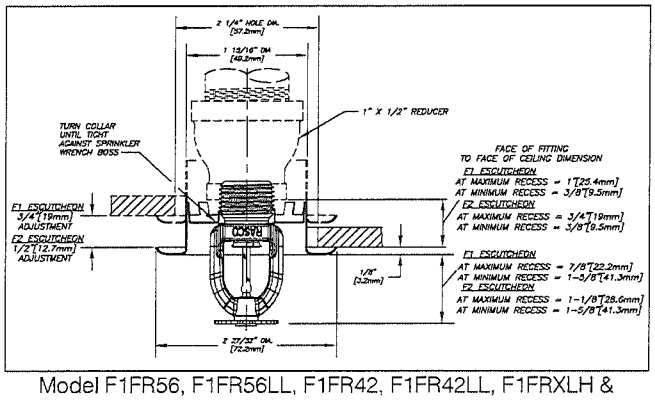

Model F1FR56, F1FR56LL, F1FR42, F1FR42LL, F1FRXLH & F1FR28 F1 or F2

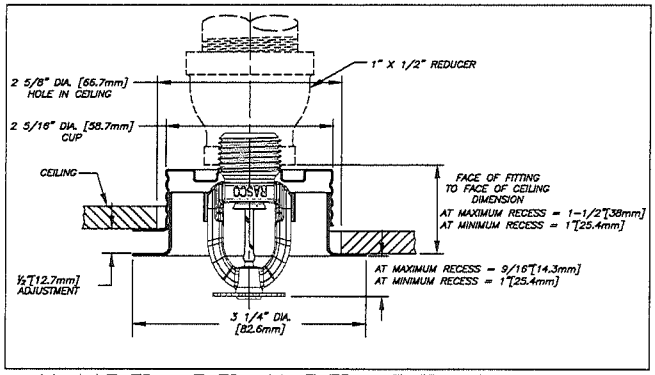

Model F1FR56, F1FR56LL, F1FR42, F1FR42LL, F1FRXLH & F1FR28 FP

Model F1FR56 Quick Response Vertical Sidewall Sprinkler

Installation Wrench: Model D Sprinkler Wrench

Installation Position: Upright or Pendent

Approval Type: Light Hazard Occupancy

Installation Data:

Nominal Orifice	Thread Size	Nominal K Factor		Sprinkler Height	Approval Organizations	Sprinkler Identification Numbers (SIN)
		US	Metric			
½" (15mm)	½" NPT (R1/2)	5.6	80	2.25" (57mm)	1, 2, 3	RA1485[2][3]
15mm	½" NPT (R1/2)	5.6	80	2.25" (57mm)	3[1]	

[1] LPC Approval is for pendent position only.
[2] cULus Listed corrosion resistant (Polyester coated) sprinkler.
[3] Electroless Nickel PTFE (Teflon®)* Plated - cULus listed Corrosion Resistant

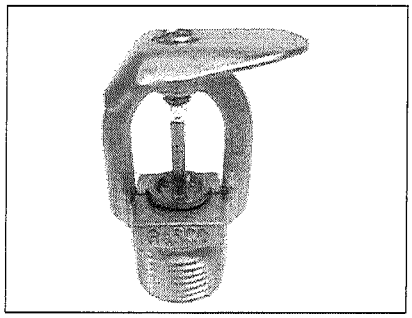

Vertical Sidewall

*DuPont Registered Trademark

Sprinkler Type	Deflector to Ceiling Distance (Min. - Max.)
Upright	4" (102mm) - 12" (305mm)
Pendent	4" (102mm) - 12" (305mm)

Model F1FR56 Quick Response Horizontal Sidewall Sprinkler

Deflector: HSW

Installation Wrench: Model D Sprinkler Wrench

Installation Data: Horizontal Sidewall

Nominal Orifice	Thread Size	Nominal K Factor		Sprinkler Height	Approval Organizations and Type of Approval		Sprinkler Identification Numbers (SIN)
		US	Metric		Light Hazard	Ordinary Hazard	
½" (15mm)	½" NPT (R1/2)	5.6	80	2.63" (67mm)	1, 2	1	RA1435[1][2][3]

[1] cULus Listed corrosion resistant (Polyester coated) sprinkler.
[2] Polyester coated FM approved sprinkler.
[3] Electroless Nickel PTFE (Teflon®)* Plated - cULus listed Corrosion Resistant

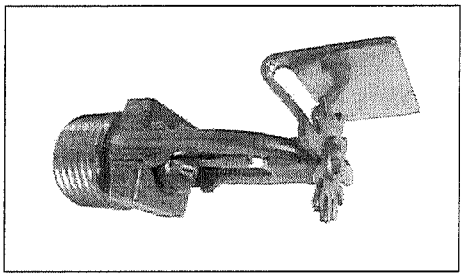

Horizontal Sidewall

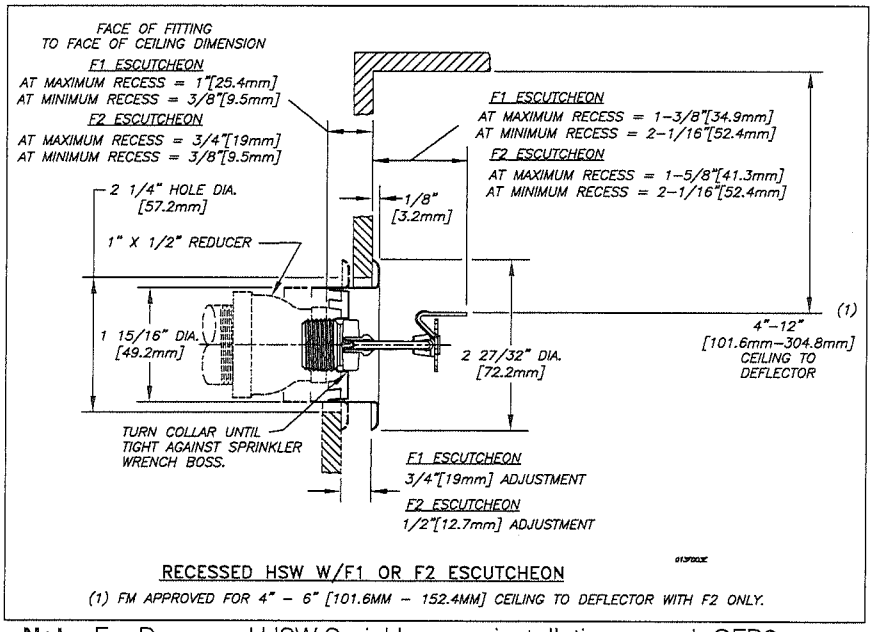

Note: For Recessed HSW Sprinklers use installation wrench GFR2. cULus permits use with F1, F2 or FP escutcheons for "Light Hazard" only. While FM limits use for the same hazard with the F2 escutcheon only.

Model F1FR56 Quick Response Concealed Pendent Sprinklers

Installation Wrench: Model RC1 Sprinkler Wrench

Technical Data:

Nominal Orifice	"K" Factor		Thread Size	Model	Temp. Rating		Max. Ambient Temp	Bulb Color	Approvals	Sprinkler Identification Number(SIN)
	US	Metric			Sprinkler	Cover				
½" (15mm)	5.6	80	½" NPT	F1FR	135°F/57°C	135°F/57°C	100°F/38°C	Orange	1	RA1414
½" (15mm)	5.6	80	½" NPT	F1FR	155°F/68°C	135°F/57°C	100°F/38°C	Red	1, 4[1], 6	RA1414
½" (15mm)	5.6	80	½" NPT	F1FR	175°F/79°C	165°F/74°C	100°F/38°C	Yellow	1	RA1414
½" (15mm)	5.6	80	½" NPT	F1FR	200°F/93°C	165°F/74°C	150°F/65°C	Green	1	RA1414

[1] For VdS only = 155°F/68°C Norbulb and 1/2" [12,7mm] adjustment.

Model F1FR56LL Quick Response Concealed Pendent Sprinklers

Installation Wrench: Model RC1 Sprinkler Wrench

Technical Data:

Nominal Orifice	"K" Factor		Thread Size	Model	Temp. Rating		Max. Ambient Temp	Bulb Color	Approvals	Sprinkler Identification Number(SIN)
	US	Metric			Sprinkler	Cover				
½" (15mm)	5.6	80	½" NPT	F1FR56LL	200°F/93°C	165°F/74°C	150°F/65°C	Green	1, 5	RA1414

*DuPont Registered Trademark

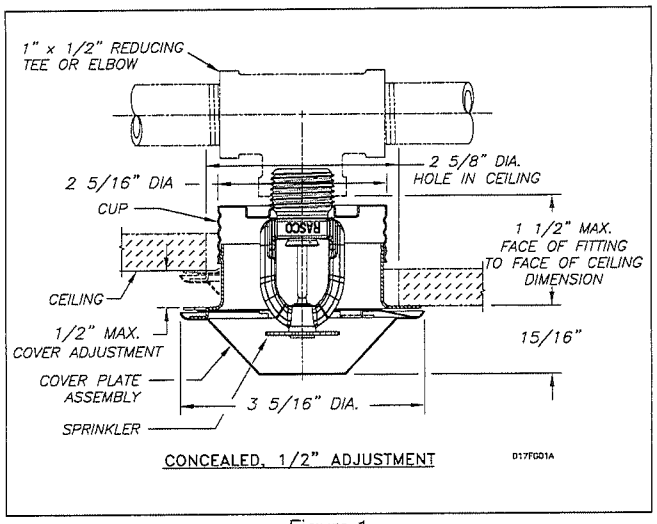

Figure 1

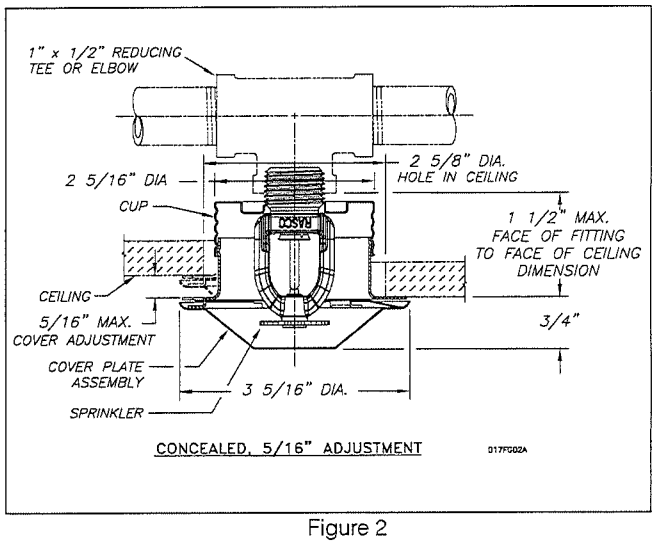

Figure 2

Installation Aid

A protective cap is included for use during installation.

Important: The F1FR56 Sprinkler with Model CCP cover plate is not an FM Approved combination.

Installation

Quick response sprinklers are intended for installation as specified in NFPA 13. Quick response sprinklers and standard response sprinklers should not be intermixed.

The Model F1FR56, F1FR56LL, F1FR42, F1FR42LL, F1FRXLH & F1FR28 Recessed Quick Response Sprinklers are to be installed as shown. The Model F1 or F2 Escutcheons illustrated are the only recessed escutcheons to be used with the Model F1FR56, F1FR56LL, F1FR42, F1FR42LL, F1FRXLH & F1FR28 Sprinklers. The use of any other recessed escutcheon will void all approvals and negate all warranties.

When installing Model F1FR56, F1FR56LL, F1FR42, F1FR42LL, F1FRXLH & F1FR28 Sprinklers, use the Model D Sprinkler Wrench. Use the Model GFR2 Wrench for installing F1FR56, F1FR56LL, F1FR42, F1FR42LL, F1FRXLH & F1FR28 Recessed Pendent Sprinklers. Any other type of wrench may damage these sprinklers.

NOTE: A leak tight ½" NPT (R1/2) sprinkler joint can be obtained with a torque of 8-18 ft-lbs (10,8 - 24,4 N-m). Do not tighten sprinklers over maximum recommended torque. It may cause leakage or impairment of the sprinklers.

The Models F1FR56/CCP & F1FR56LL/CCP Concealed Sprinkler use the ½" orifice, ½" NPT (R1/2), Model F1FR56 & F1FR56LL Pendent Sprinkler with a threaded Model CCP cup which is factory attached to the sprinklers. The Model F1FR56 Pndent is available in temperature rating of 135°F (57°C), 155°F (68°C), 175°F (79°C) or 200°F (93°C). The Model F1FR56LL Pendent is available only in a rating of 200°F (93°C). The concealed sprinkler assemblies are completed by the installation of the attractive low profile Model CCP push on cover plate assembly, rated 135°F (57°C) or 165°F (74°C) for the F1FR56 and 165°F (74°C) for the FIFR56 LL. The cover plate and sprinkler cup assemblies are joined using a cover plate skirt with flexible tabs for threaded engagement. A choice of two cover plate assemblies provide either 1/2" (13mm) or 5/8" (8mm) of cover adjustment,

Do not install these sprinklers in ceiling which have positive pressure in the space above.

After a $2^5/_8$" (67mm) diameter hole is cut in the ceiling, the sprinkler is easily installed with the Model RC1 Wrench. A Teflon* based thread sealant should be applied to the sprinkler threads only. The Model RC1 Wrench is then used to engage the sprinkler wrenching surfaces and to install the sprinkler in the fitting. When inserting or removing the wrench from the sprinkler/cup assembly, care should be taken to prevent damage to the sprinkler. DO NOT WRENCH ON ANY OTHER PART OF THE SPRINKLER. The cover plate is then pushed onto the cup. Final adjustment is made by hand turning the cover plate until the skirt flange makes full contact with the ceiling. Cover plate removal requires turning in the counter clockwise direction.

After installation, inspect all sprinklers to ensure that there is a gap between the cover plate and ceiling and that the four cup slots are open and free from any air flow impediment to the space above.

Concealed cover plate/cup assemblies are listed only for use with specific sprinklers. The use of any other concealed cover plate/cup assembly with the Model F1FR56 Pendent Sprinkler or the use of the Model CCP Concealed cover plate assembly on any sprinkler with which it is not specifically listed my prevent good fire protection and will void all guarantees, warranties, listings and approvals.

Glass bulb sprinklers have orange bulb protectors to minimize bulb damage during shipping, handling and installation. REMOVE THIS PROTECTION AT THE TIME THE SPRINKLER SYSTEM IS PLACED IN SERVICE FOR FIRE PROTECTION. Removal of the protectors before this time may leave the bulb vulnerable to damage. RASCO wrenches are designed to install sprinklers when covers are in place. REMOVE PROTECTORS BY UNDOING THE CLASP BY HAND. DO NOT USE TOOLS TO REMOVE THE PROTECTORS.

*DuPont Registered Trade Mark

Temperature Ratings

Classification	Sprinkler Temperature		Max. Ambient Temp.	Bulb Color
	°C	°F		
Ordinary	57	135	100°F (38°C)	Orange
Ordinary	68	155	100°F (38°C)	Red
Intermediate	79	175	150°F (66°C)	Yellow
Intermediate	93	200	150°F (66°C)	Green
High [1]	141	286	225°F (107°C)	Blue

[1] Not available for recessed sprinklers.

Escutcheon Data [1]

[1] SIN RA1435 – cULus permits use with F1, F2 or FP escutcheons for "light hazard" only, while FM limits use for same hazard with F2 escutcheon only.

Maintenance

The Model F1FR56, F1FR56LL, F1FR42, F1FR42LL, F1FRXLH and Model F1FR56, F1FR56LL, F1FR42, F1FR42LL, F1FRXLH & F1FR28 Recessed Sprinklers should be inspected and the sprinkler system maintained in accordance with NFPA 25. Do not clean sprinklers with soap and water, ammonia or any other cleaning fluids. Remove dust by using a soft brush or gentle vacuuming. Remove any sprinkler which has been painted (other than factory applied) or damaged in any way. A stock of spare sprinklers should be maintained to allow quick replacement of damaged or operated sprinklers. Prior to installation, sprinklers should be maintained in the original cartons and packaging to minimize the potential for damage to sprinklers that would cause improper operation or non-operation.

Sprinkler Types

Standard Upright
Standard Pendent
Conventional
Recessed Pendent
Vertical Sidewall
Horizontal Sidewall
Recessed Horizontal sidewall
Concealed pendent

Maximum Working Pressure

175 psi (12 bar)
100% Factory tested hydrostatically to 500 psi (34.5 bar)

Finishes [1]

Standard Finishes		
Sprinkler	**Escutcheon**	**Cover plate[1]**
Bronze	Brass	Chrome
Chrome Plated	Chrome	White
Polyester	Plated	
Coated [4][5][6]	White Painted	
Special Application Finishes		
Sprinkler	**Escutcheon**	**Cover plate[1]**
Electroless Nickel PTFE(Teflon®)*[7]	Electroless Nickel PTFE (Teflon®)*	Bright Brass
Bright Brass[3]	Bright Brass	Black Plating
Black Plated	Black Plated	Black Paint
Black Paint[2][6]	Black Paint	Off White
Off White[2][6]	Off White	Satin Chrome
Chrome Dull	Chrome Dull	

[1] Other finishes and colors are available on special order. Consult the factory for details. Custom color painted sprinklers may not retain their UL Corrosion resistance listing. Coverplate custom paint is semi-gloss, unless specified otherwise.
[2] cULus Listed only.
[3] 200°F (93°C) maximum.
[4] cULus listed "corrosion resistance" applies to SIN Numbers RA1435 (HSW), RA1485(VSW), RA1425 (Upright), RA1414 (Pendent) and RA1415 (Pendent) in standard black or white. Corrosion resistance in other polyester colors is available upon request.
[5] FM Approvals finish as "Polyester coated" applies to SIN Number RA1414, RA1435 and RA1425 in standard black or white.
[6] LPCB and VdS Approved finish applies only to RA1425, RA1414 and RA1475.
[7] cULus listed Corrosion Resistant

Ordering Information

Specify:

1. Sprinkler Model
2. Sprinkler Type
3. Orifice Size
4. Deflector Type
5. Temperature Rating
6. Sprinkler Finish
7. Escutcheon Type
8. Escutcheon Finish (where applicable)
9. Cover plate Model
10. Cover plate Thread size
11. Cover plate Temperature
12. Cover plate Adjustment
13. Cover plate Finish

Note: When Model F1FR56 Recessed sprinklers are ordered, the sprinklers and escutcheons are packaged separately.

*DuPont Registered Trademark

BROCHURE

SprinkFLEX®

COMMERCIAL FIRE SPRINKLER CONNECTIONS
Product Submittal

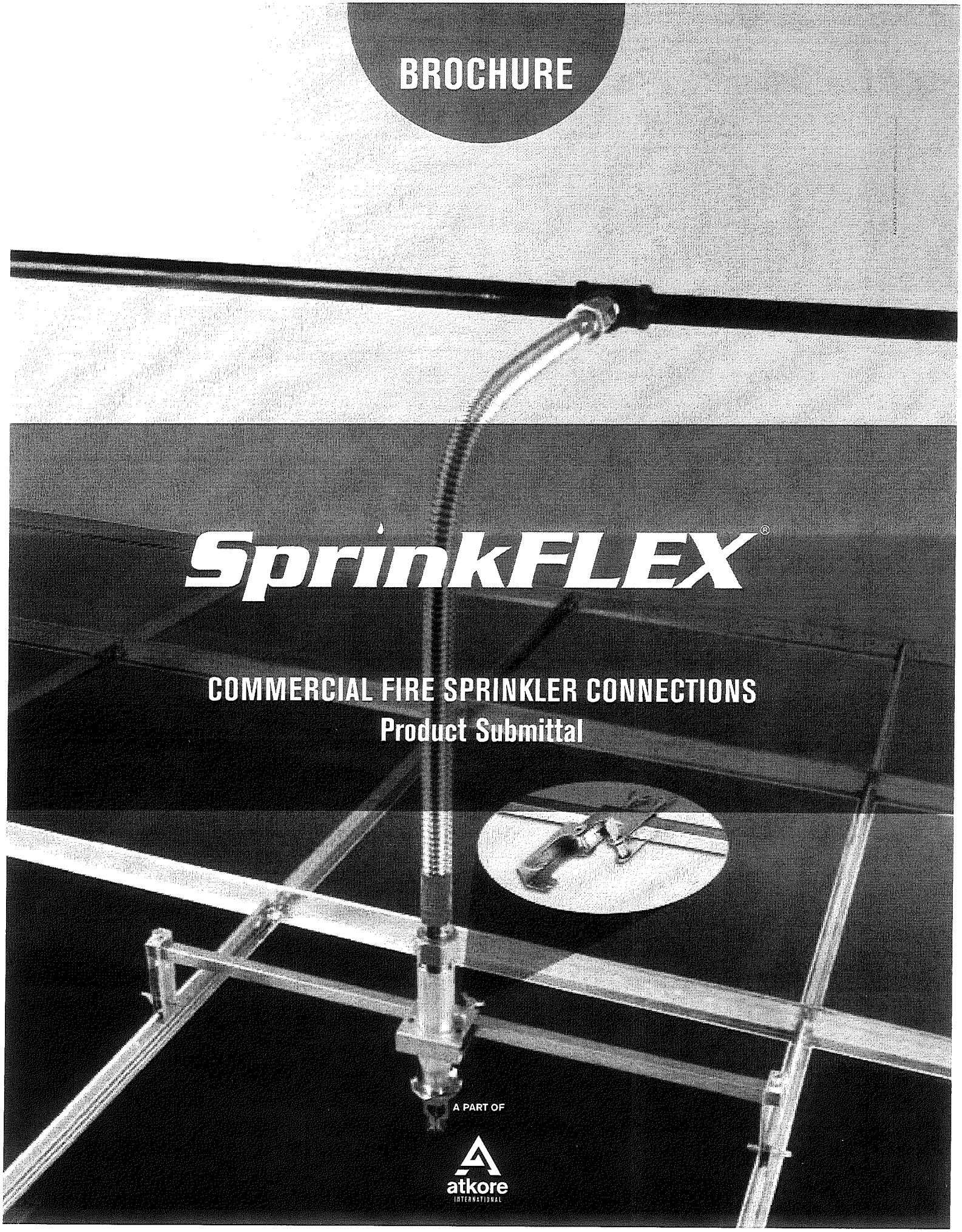

A PART OF

atkore INTERNATIONAL

Limited Warranty

SprinkFLEX LLC warrants that its products will be free from defects in materials and workmanship under normal conditions of use and service for a period of one year from date of sale. Our obligation under this warranty is limited to repairing or replacing any product that is returned to us with transportation charges prepaid within one year after the date of original sale and that our examination shows to our satisfaction to have been defective in materials or workmanship under normal conditions of use and service. The decision as to whether to repair or to replace any product shall be made by us, and any repair shall be made at our facility. Notwithstanding the foregoing, the following are specifically excluded from the coverage of this warranty:

(a) the sprinkler head of any SprinkFLEX LLC product, but SprinkFLEX LLC hereby assigns to the original purchaser of any such product the right to enforce the warranty, if any, issued by the manufacturer of such sprinkler head;
(b) defects resulting from ordinary wear and tear, of any SprinkFLEX LLC. Product;
(c) products that have been altered in any manner by the buyer or by anyone other than SprinkFLEX LLC.;
(d) products that have been subjected to misuse, abusive use, or damage by accident or casualty;
(e) products that have been installed or used in a manner contrary to our specifications, instructions or recommendation;
(f) products that have been installed or used in a manner that is not in compliance with all applicable requirements of any code, law, regulation or rule of any federal, state or local governmental or industry authority; and
(g) products that have not been inspected and maintained in accordance with our specifications, instructions or recommendations, including, without limitation, our recommendations as to following the inspection and maintenance standards published by the National Fire Protection Association (NFPA); and
(h) products that have been affected by Microbiologically Influenced Corrosion (MIC).

This warranty is not assignable and shall benefit only the original purchaser of a SprinkFLEX LLC product. If any provision hereof or any portion of any provision shall be held invalid, the remainder of this Limited Warranty shall not be affected thereby, and all provisions of this Limited Warranty shall remain valid and in full force and effect to the fullest extent permitted by law.

THIS WARRANTY IS IN LIEU OF ALL IMPLIED WARRANTIES, INCLUDING, BUT NOT LIMITED TO, WARRANTIES OF MERCHANTABILITY AND WARRANTIES OF FITNESS FOR A PARTICULAR PURPOSE. NOTWITHSTANDING ANY PROVISION TO THE CONTRARY HEREIN OR ANY APPLICABLE LAW TO THE CONTRARY, IN NO EVENT SHALL SPRINKFLEX LLC. BE LIABLE FOR INCIDENTAL OR CONSEQUENTIAL DAMAGES UNDER ANY CIRCUMSTANCES WHATSOEVER, WHETHER ARISING FROM ANY BREACH OF THIS LIMITED WARRANTY OR OTHERWISE ARISING FROM OR IN CONNECTION WITH THE USE OR OPERATION OF, OR ANY DEFECT IN, ANY SPRINKFLEX, LLC. PRODUCT, OR OTHERWISE. The risk of damages from any breach of warranty with respect to injury to any person will be born by the purchaser of SprinkFLEX LLC.

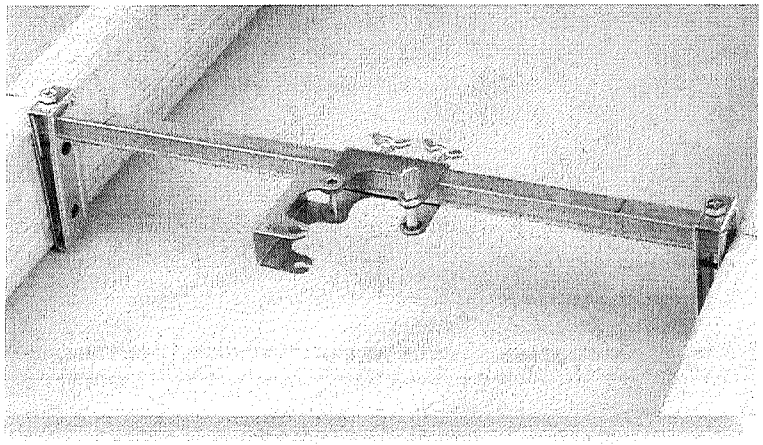

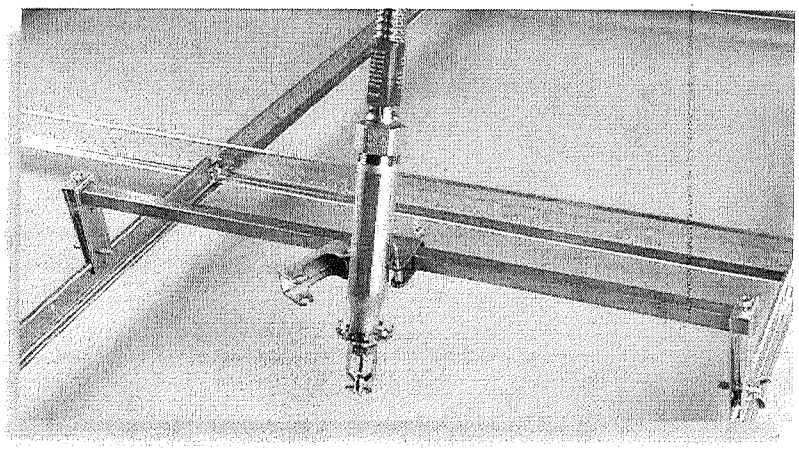

Series SFN Unbraided Flexible Hose Assemblies c UL us LISTED

Series SFB Braided Flexible Hose Assemblies FM APPROVED c UL us LISTED

SprinkFLEX Stainless Steel Sprinkler Fittings connect the branch line to the sprinkler using a flexible stainless steel hose and reducer. The flexible stainless steel hose and fittings are intended for direct connection to the sprinkler and are particularly suited for use in suspended and hard ceiling applications. Each drop assembly comes with one stainless steel flexible hose, one branch line connection nipple, one sprinkler reducing nipple and bracket system.

SYSTEM OPTIONS

- Pre-assembled, ready to install, unbraided and braided flexible stainless steel hose lengths:
  28" (700mm), 40" (1000mm), 48" (1200mm), 59" (1500mm), 71" (1800mm)
- 1/2" and 3/4" outlet fittings for connecting sprinkler
- Pre-assembled, ready to install mounting bracket available in 24" and 48" long
- Mounting bracket allows the sprinkler to be locate anywhere within the ceiling with reference marks in the center for ease of installation without the need for measuring.
- Optional factory installed sprinkler head.

TECHNICAL DATA

- Maximum Working Pressure: 200 psi (1375 kPa)
- Maximum Ambient Temperature: 300° F (149°C)
- Connection to Branch Line: 1-inch NPT
- Minimum Bend Radius of Flexible Stainless Steel Hose:
  3 inches (76.2 mm) per UL Listing
  8 inches (203.2 mm) per FM Approval
- Maximum Number of 90° Bends Per Flexible Stainless Steel Hose:
  2 - 90 degree bends for 28" length
  3 - 90 degree bends for 40", 48", 59"and 71" lengths
  The flexible stainless steel hose should not be bent within 21/2 inches (64 mm) of the connection nut at both ends.
- Maximum K-Factor of Sprinkler to be connected to Sprinkler Reducing Nipple:
  1/2 inch outlets: 8.0
  3/4 inch outlets: 11.2
- Listings and Approvals:
  Unbraided models are UL Listed
  Braided models are FM Approved and UL Listed

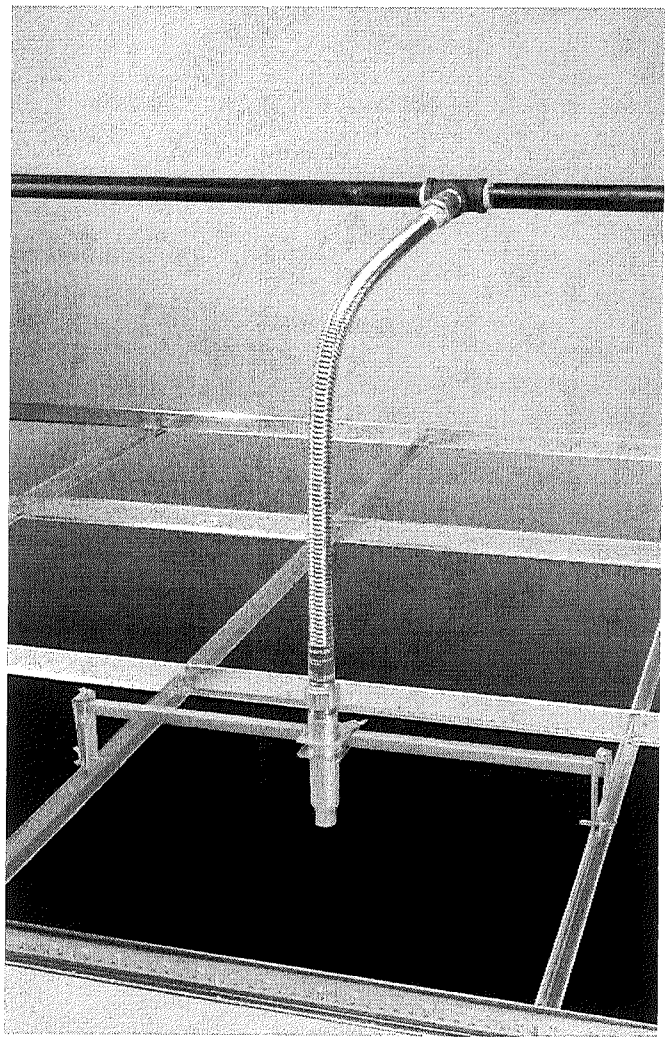

FLEXIBLE HOSE - NON BRAIDED

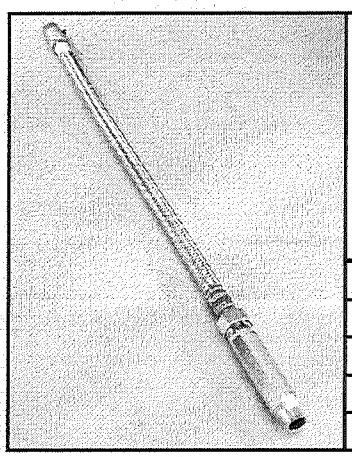

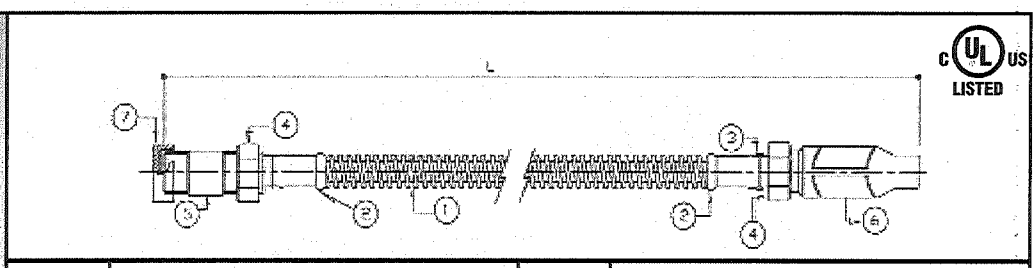

NO.	DESCRIPTION	NO.	DESCRIPTION
1	Flexible Hose 7/8" Nominal Diameter	5	Nipple
2	Ring	6	Reducer 1/2" or 3/4"
3	Washer	7	Plastic Cap
4	Slip Nut		

FLEXIBLE HOSE - BRAIDED

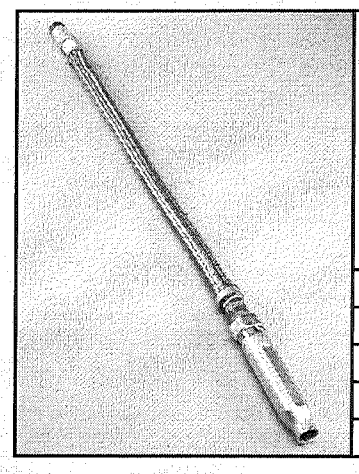

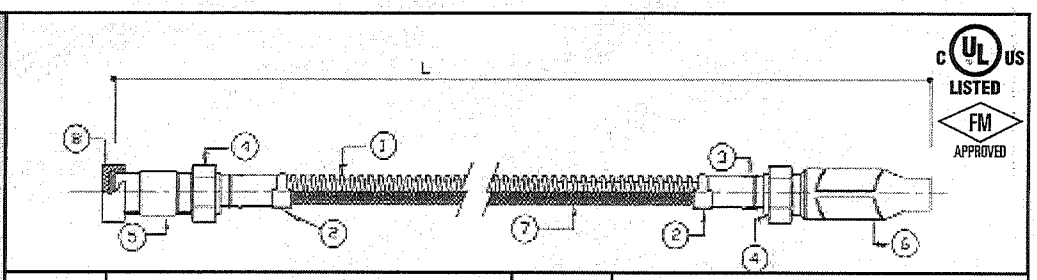

NO.	DESCRIPTION	NO.	DESCRIPTION
1	Flexible Hose 7/8" Nominal Diameter	5	Nipple
2	Ring	6	Reducer 1/2" or 3/4"
3	Washer	7	Braid
4	Slip Nut	8	Plastic Cap

BRACKET ASSEMBLY

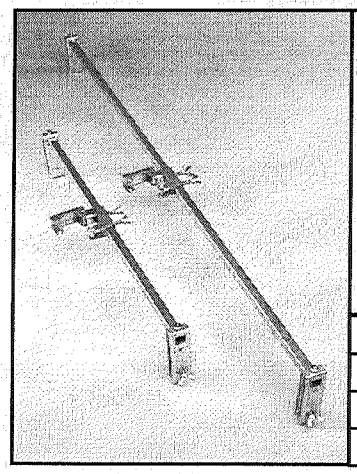

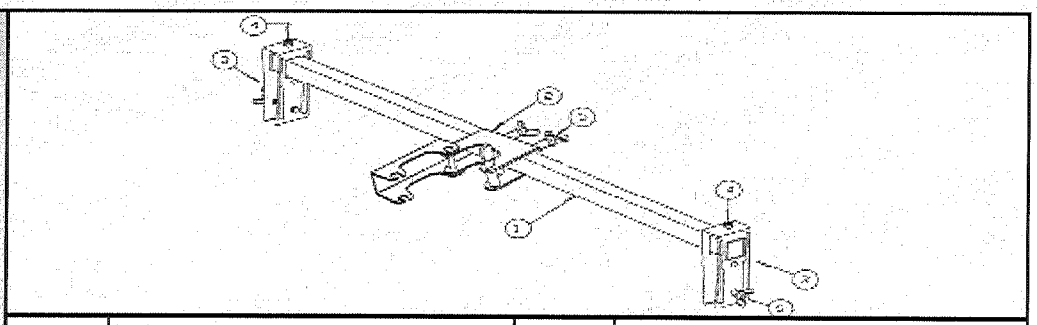

NO.	DESCRIPTION	NO.	DESCRIPTION
1	24" or 48" Support Bar	4	Hex Screw
2	Center Bracket Assembly	5	Wing Bolt
3	Clamp		

MATERIAL SPECIFICATIONS

Corrugated Flexible Hose: SS304	Support Bar: G90 Galvanized Steel
SEAL: EPDM	Clamp and Center Bracket Assembly: G90 Galvanized Steel
SLIP NUT AND NIPPLE: Zinc-Plated Carbon Steel	Hex Screw and Wing Bolts: Zinc-Plated Carbon Steel
Slip Nut and Nipple: Zinc-Plated Carbon Steel	Optional Tamper-Resistant Screw: Zinc-Plated Carbon Steel
BRAID AND BRAID RING: SS304	

FRICTION LOSS DATA

UNBRAIDED HOSE UL LISTED

MODEL	INLET & OUTLET SIZE NPT INCH	LENGTH INCH (mm)	NUMBER OF 90 DEGREE BENDS	UL LISTED – UNBRAIDED HOSE MAXIMUM EQUIVALENT LENGTH OF SCH 40 1 INCH DIAMETER PIPE (C=120), FT
SFN28H	1 x 1/2	28" (700mm)	2	22
SFN28T	1 x 3/4	28" (700mm)	2	28
SFN40H	1 x 1/2	40" (1000mm)	3	39
SFN40T	1 x 3/4	40" (1000mm)	3	54
SFN48H	1 x 1/2	48" (1200mm)	3	56
SFN48T	1 x 3/4	48" (1200mm)	3	63
SFN59H	1 x 1/2	59" (1500mm)	3	59
SFN59T	1 x 3/4	59" (1500mm)	3	74
SFN71H	1 x 1/2	71" (1800mm)	3	67
SFN71T	1 x 3/4	71" (1800mm)	3	74

*Series SFN models are unbraided/Series SFB models are braided
*Unbraided hoses are UL Listed
*Braided hoses are FM Approved

BRAIDED HOSE FM APPROVED AND UL LISTED

MODEL	INLET & OUTLET SIZE NPT INCH	LENGTH INCH (mm)	NUMBER OF 90 DEGREE BENDS	UL–BRAIDED HOSE MAXIMUM EQUIVALENT LENGTH OF SCH 40 1 INCH DIAMETER PIPE (C=120), FT	FM–BRAIDED HOSE MAXIMUM EQUIVALENT LENGTH OF SCH 40 1 INCH DIAMETER PIPE (C=100), FT
SFB28H	1 x 1/2	28" (700mm)	2	22	18.6
SFB28T	1 x 3/4	28" (700mm)	2	28	18.8
SFB40H	1 x 1/2	40" (1000mm)	3	39	24.6
SFB40T	1 x 3/4	40" (1000mm)	3	54	24.8
SFB48H	1 x 1/2	48" (1200mm)	3	56	28.5
SFB48T	1 x 3/4	48" (1200mm)	3	63	28.7
SFB59H	1 x 1/2	59" (1500mm)	3	59	34.4
SFB59T	1 x 3/4	59" (1500mm)	3	74	34.6
SFB71H	1 x 1/2	71" (1800mm)	3	67	40.4
SFB71T	1 x 3/4	71" (1800mm)	3	74	40.6

BRAIDED HOSE WITH ELBOW - FM APPROVED

MODEL	INLET & OUTLET SIZE NPT INCH	LENGTH INCH (mm)	NUMBER OF 90 DEGREE BENDS	FM–BRAIDED HOSE MAXIMUM EQUIVALENT LENGTH OF SCH 40 1 INCH DIAMETER PIPE (C=120), FT
SFB28H – E	1 x 1/2	28" (700mm)	2	20.6
SFB28T – E	1 x 3/4	28" (700mm)	2	20.8
SFB40H – E	1 x 1/2	40" (1000mm)	3	26.6
SFB40T – E	1 x 3/4	40" (1000mm)	3	26.8
SFB48H – E	1 x 1/2	48" (1200mm)	3	30.5
SFB48T – E	1 x 3/4	48" (1200mm)	3	30.7
SFB59H – E	1 x 1/2	59" (1500mm)	3	36.4
SFB59T – E	1 x 3/4	59" (1500mm)	3	36.6
SFB71H – E	1 x 1/2	71" (1800mm)	3	42.4
SFB71T – E	1 x 3/4	71" (1800mm)	3	42.6

139A Charles Street #313

Boston MA 02114

電話 / 800-465-1276

FAX / 888-502-3775

sprinkflex@gmail.com

www.sprinkflex.com

©2013 Arcore International, Inc. All rights reserved. SPFL-9000-1001

FlexHead commercial fire sprinkler connections

FLEXHEAD®
INDUSTRIES
The pioneers in flexible fire protection

Your connection to higher productivity. And lower costs.

FBC SYSTEM COMPATIBLE
FM APPROVED
c UL us LISTED
LPCB

N.Y.C. MEA #261-99-E
CA: OPA-0672

*USE AT GWB CEILINGS

Friction Loss Data and Specifications

FRICTION LOSS

FlexHead Model #	Outlet (orifice) Size in(cm)	Hose Assembly Length ft(m)	Maximum Number of 90-Degree Bends (3 in. Bending Radius)	Maximum Equivalent Length of Schedule 40, Nominal 1 in. Diameter Pipe, ft FM	UL	Maximum Ambient Temperature Rating F(C)	Maximum Rated Pressure H-Series psi (kPa)/psi (kPa)	Maximum K-factor
2024, 2024H	1/2(1.27)	2(0.6)	3	3.5, 11	11	300°(148°)	175(1205)/300(2068)	5.62
2036, 2036H	1/2(1.27)	3(0.9)	3	4.8, 19	16	300°(148°)	175(1205)/300(2068)	5.62
2048, 2048H	1/2(1.27)	4(1.2)	4	6.8, 21	24	300°(148°)	175(1205)/300(2068)	5.62
2060, 2060H	1/2(1.27)	5(1.5)	4	8.5, 24	29	300°(148°)	175(1205)/300(2068)	5.62
2072, 2072H	1/2(1.27)	6(1.8)	4	8.9, 27.5	35	300°(148°)	175(1205)/300(2068)	5.62
2024 75, 2024H 75	3/4(1.90)	2(0.6)	3	7.8, 15.3	12	300°(148°)	175(1205)/300(2068)	14.0
2036 75, 2036H 75	3/4(1.90)	3(0.9)	3	8.1, 22.3	18	300°(148°)	175(1205)/300(2068)	14.0
2048 75, 2048H 75	3/4(1.90)	4(1.2)	4	17.9, 32.1	23	300°(148°)	175(1205)/300(2068)	14.0
2060 75, 2060H 75	3/4(1.90)	5(1.5)	4	19.9, 35.4	29	300°(148°)	175(1205)/300(2068)	14.0
2072 75, 2072H 75	3/4(1.90)	6(1.8)	4	24.3, 42.9	32	300°(148°)	175(1205)/300(2068)	14.0
2024E, 2024HE	1/2(1.27)	2(0.6)	3	5.5, 13	19	300°(148°)	175(1205)/300(2068)	5.62
2036E, 2036HE	1/2(1.27)	3(0.9)	3	6.8, 21	23	300°(148°)	175(1205)/300(2068)	5.62
2048E, 2048HE	1/2(1.27)	4(1.2)	4	8.8, 23	27	300°(148°)	175(1205)/300(2068)	5.62
2060E, 2060HE	1/2(1.27)	5(1.5)	4	10.5, 26	32	300°(148°)	175(1205)/300(2068)	5.62
2072E, 2072HE	1/2(1.27)	6(1.8)	4	10.9, 29.5	35	300°(148°)	175(1205)/300(2068)	5.62
2024E 75, 2024HE 75	3/4(1.90)	2(0.6)	3	9.8, 17.3	18	300°(148°)	175(1205)/300(2068)	14.0
2036E 75, 2036HE 75	3/4(1.90)	3(0.9)	3	10.1, 24.3	23	300°(148°)	175(1205)/300(2068)	14.0
2048E 75, 2048HE 75	3/4(1.90)	4(1.2)	4	19.9, 34.1	23	300°(148°)	175(1205)/300(2068)	14.0
2060E 75, 2060HE 75	3/4(1.90)	5(1.5)	4	21.9, 37.4	29	300°(148°)	175(1205)/300(2068)	14.0
2072E 75, 2072HE 75	3/4(1.90)	6(1.8)	4	26.3, 44.9	32	300°(148°)	175(1205)/300(2068)	14.0

Model Numbers: The "H" designates high pressure unit rated to 300 psig and the "E" designates elbow style unit.

FlexHead products are intended for use in hydraulically designed wet, pre-action, deluge or dry pipe sprinkler connections per NFPA 13, 13R, and 13D guidelines. The hydraulic loss of the FlexHead connector needs to be included in the hydraulic design calculations the same as a valve or fitting. *Each FlexHead sprinkler drop has a 3" minimum bend radius per UL guidelines, and a 7" minimum bend radius per FM guidelines.*

* **Equivalent lengths are shown with maximum number of 90 degree bends at the minimum bend-radius. Different values were obtained by FM and UL due to the differences in minimum bend radius, testing protocol and calculation methods. Please see individual testing standards for more information relative to friction loss (Equivalent Length of Pipe).**

Pressure surges aren't a risk for FlexHead connection systems. Our fully braided stainless steel hose is rated to 300 psi.

Let FlexHead make your connection today.

Engineers

Stainless steel quality at black iron costs

Fast-track construction

Simplified project management

Cost-effective code compliance

Seismically qualified

Contractors

Lower installation costs

More productive installers

No punch list items

Highest quality available

More flexible scheduling

Competitive advantage for your company

Owners

Shorter time to occupancy

Lower reconfiguration costs

Cost effective code compliance

Lower total costs of ownership

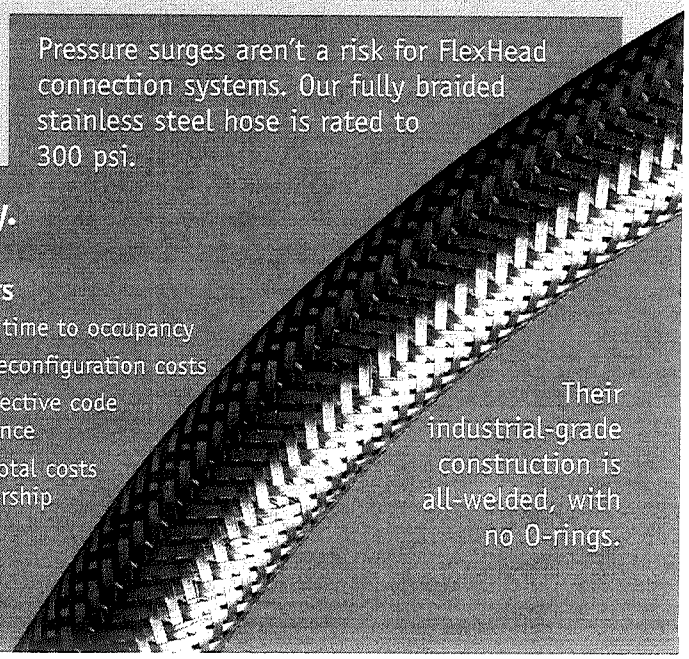

Their industrial-grade construction is all-welded, with no O-rings.

Connect sprinkler heads to sub-mains at least four times faster.

FlexHead systems connect sprinkler heads to sprinkler sub-mains in about a quarter of the time it takes to install hard pipe. Add in the fact that less-skilled people can do the work, and you're looking at significant productivity gains.

Expect even greater savings in retrofits, where FlexHead installs six to seven times faster than hard pipe.

Everything about FlexHead says "fast installation." You don't need to install bracing or hangers. There's no on-site assembly. Every sprinkler connection is a finished, pre-constructed assembly, from the 1" pipe connector to the sprinkler head outlet.

You pay a little more for FlexHead connections compared to black iron armovers. But their labor savings far exceed the materials premium.

Installation is simple

It doesn't matter whether the sprinkler head is semi-recessed, full pendant or fully concealed, it's a snap to attach to a FlexHead connection system.

1. Attach the bracket to t-bar ceiling grid.
2. Connect the FlexHead sprinkler drop to the submain.
3. Secure sprinkler drop to the bracket.

That's it! No more wasted hours spent hard-piping. No more frustration over changes to blueprints. No more lost time fixing leaks and other problems common to hard-pipe armovers.

Each connection is ready to install right out of the box. It comes complete with a mounting bracket—compatible with any suspended or Sheetrock ceiling system—and a one-piece, leak-tested FlexHead sprinkler drop.

Want pinpoint locations? No problem.

The design makes it easy to accurately locate sprinkler heads every time. If the spec calls for center-of-tile placement, you can do it with ease. In fact, you get center-of-tile placement every install whether the spec calls for it or not. It takes one more headache out of specifying and bidding.

Accommodate floor plan changes.

Need to relocate sprinkler heads? No problem. With its built-in flexibility it's much easier to move heads to a new location to accommodate new layouts or uses of the space.

Retrofits in less time.

Need to comply to code in unsprinklered buildings? In contrast to costly and labor-intensive hard-pipe retrofits, FlexHead connections install in minutes in even the most restrictive spaces.

Shorten your time to occupancy.

Faster installation times help get end-users into their spaces more quickly—and get installers on their next projects faster. FlexHead connections virtually eliminate punch list items commonly found with hard-pipe armovers.

Green Benefits

Millions of gallons of water are drained from sprinkler piping every year. FlexHead products help minimize hydrostatic testing and eliminate the need to drain down the system when relocating sprinkler heads.

Three steps to faster installations.

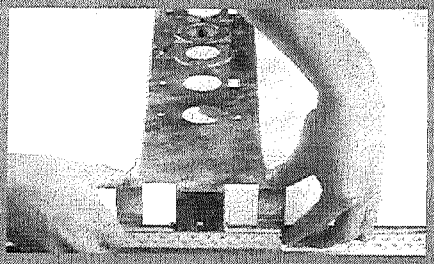

Attach bracket to t-bar ceiling grid.

Connection also compatible with Sheetrock ceilings

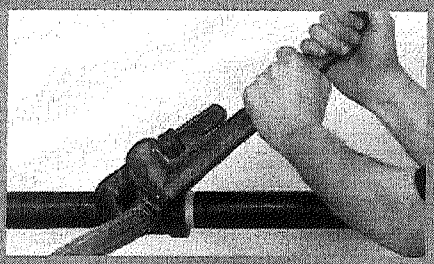

Connect FlexHead sprinkler drop to submain.

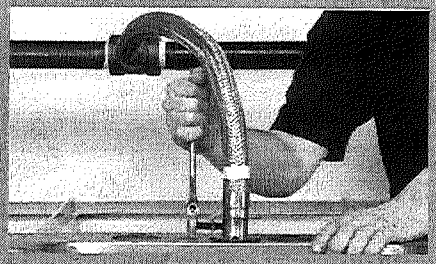

Secure FlexHead sprinkler drop to bracket.

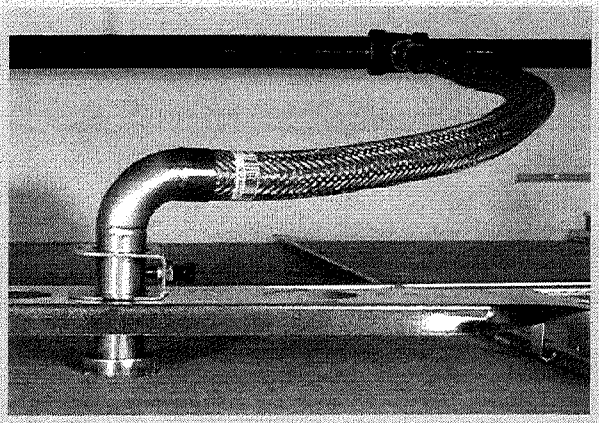

Elbow style unit used in confined space applications.

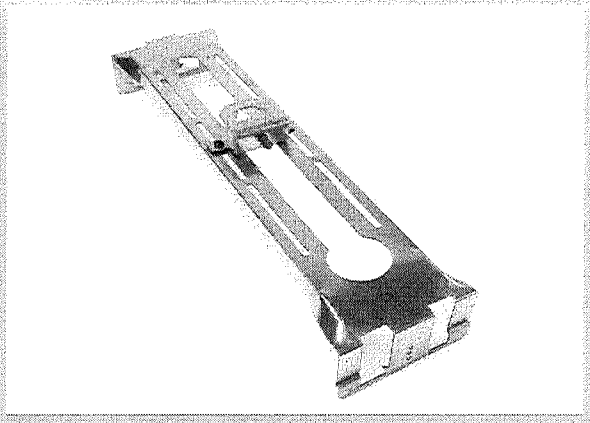

Adjustable Bracket Design: for use with T-bar grid, metal stud and Chicago grid applications.

FM approved and UL listed

All FlexHead sprinkler connections are Factory Mutual Approved and Underwriters Laboratories listed for suspended or sheetrock ceiling installations. Tests include hydrostatic pressure, vibration, friction loss, fatigue, head deployment, corrosion and water hammer.

Our commercial connections also conform to these industry standards:

- Approved for use in suspended ceilings with light, medium, and heavy-load grids (**ASTM C-635** and **C-636**)
- They're the *only* flexible sprinkler connection qualified for use in **Seismic Design Categories C, D, E** and **F**
- International Building Code (**IBC**) compliant *without* needing an unsightly oversized ring, sleeve or adaptor where the ceiling meets the sprinkler head
- Compatible with **BlazeMaster®** fire sprinkler systems
- Meets all **NFPA 13** guidelines and is specifically referenced in the 2007 edition

Fully guaranteed

FlexHead has always maintained a commitment to quality. We pressure- and leak-test every FlexHead connection at our FM- and UL-audited factory. Burst pressures exceed 3,000 pounds. Every product is covered by our comprehensive limited warranty.

Choose the length you need

FlexHead connections are available in 2′, 3′, 4′, 5′ and 6′ hose lengths, and easily fit any sprinkler head on the market Outlets can accommodate both ½″ and ¾″ sprinkler heads.

Call, write or visit our website

FlexHead Industries offers everything you need to specify, bid and install higher quality fire protection. Let us make your connection today. Get in touch via the method that suits you best:

- E-mail **sales1@flexhead.com** with questions and requests.
- Call toll-free **800-829-6975** to speak to a representative.
- Visit **www.flexhead.com** for data sheets and demonstrations.

New construction comparison

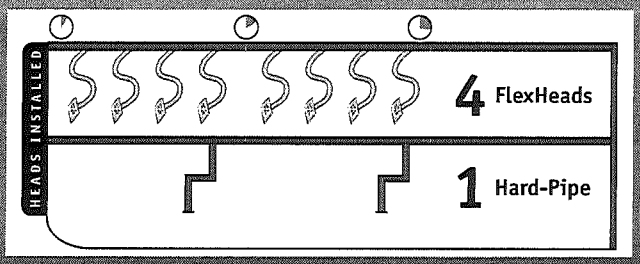

During a typical installation, a minimum of 4 FlexHeads can be installed in the the same time it takes to do 1 hard-pipe.

Retrofit comparison

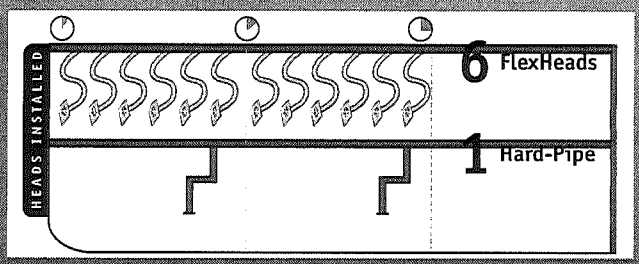

During a typical installation, a minimum of 6 FlexHeads can be installed in the the same time it takes to do 1 hard-pipe.

FlexHead metal stud detail

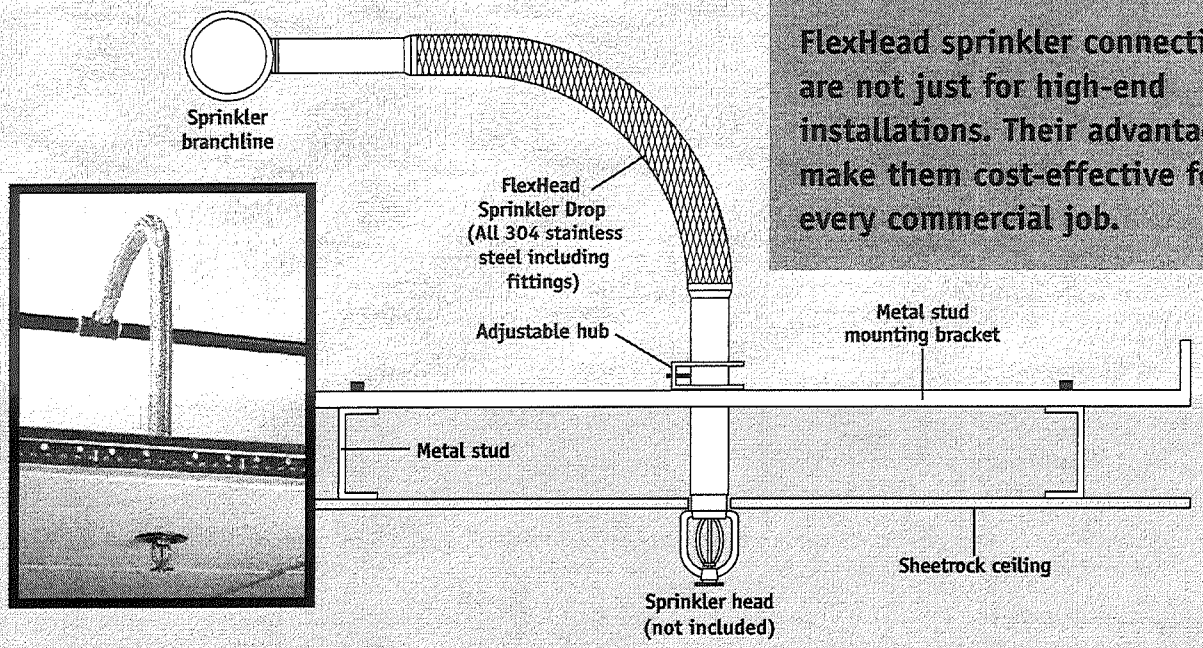

FlexHead sprinkler connections are not just for high-end installations. Their advantages make them cost-effective for every commercial job.

FlexHead suspended ceiling detail

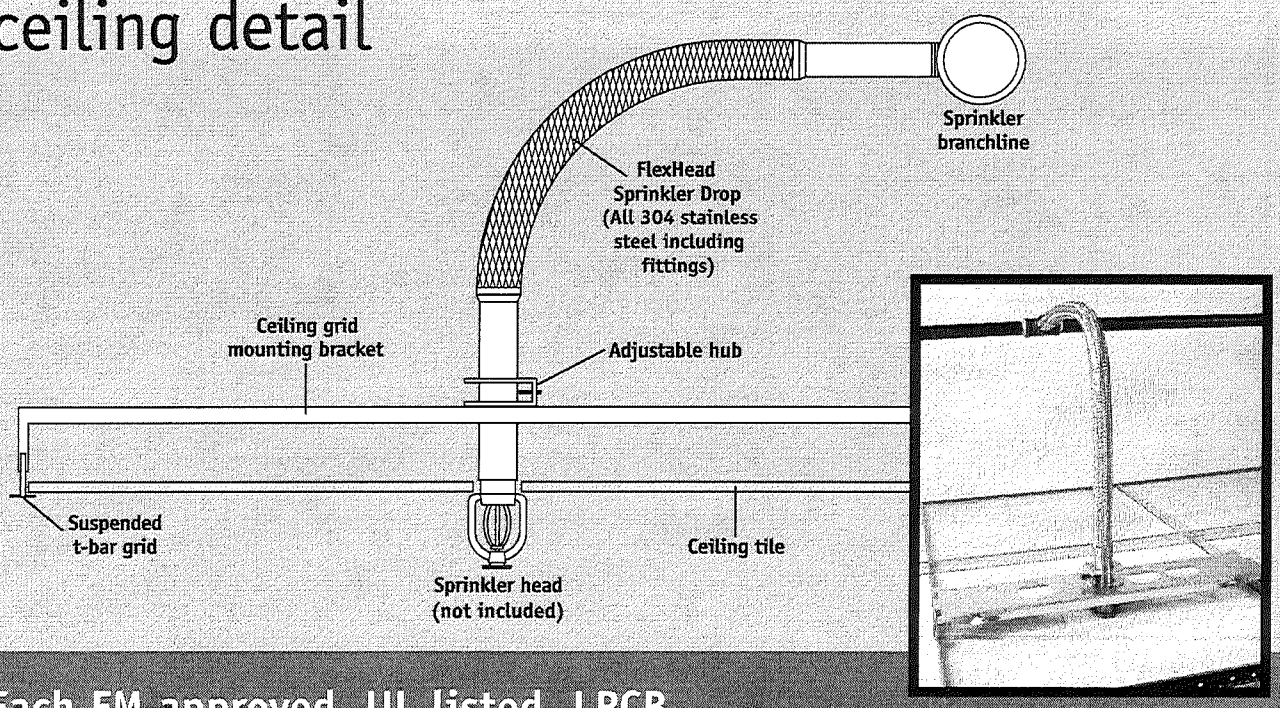

Each FM approved, UL listed, LPCB certified unit is ready-to-install, pressure- and leak-tested, and comes complete with a flexible stainless steel hose and mounting bracket with adjustable hub.

FlexHead commercial fire sprinkler connections

Your security is our business.

FlexHead Industries was founded in 1992 to help engineers, builders and owners increase the safety of their buildings. Our patented sprinkler connection technologies show that it's possible to comply with codes cost-effectively. We're proud to help reduce the risks of property damage and loss of life in a wide variety of buildings, domestically and world-wide.

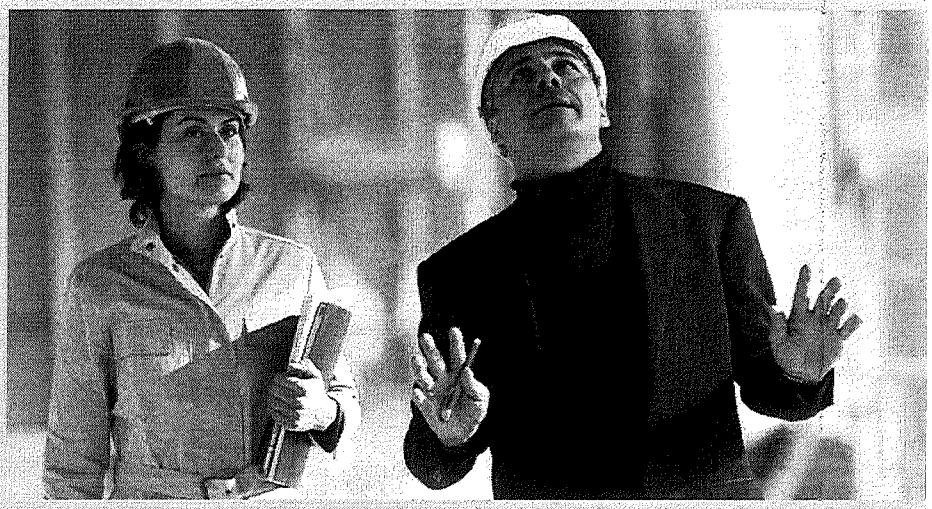

FlexHead manufactures sprinkler connections for all types of applications including:

Commercial
- Government
- Hospitals
- Offices
- Restaurants
- Retail
- Schools

Cleanrooms
- Biotechnology
- Electronics
- High-end commercial ceilings
- Pharmaceuticals
- Semiconductors

Exhaust ducts
- Aerospace
- Automotive
- Biotechnology
- Electronics
- Forest products/ paper pulp
- Laboratories
- Petrochemical
- Pharmaceuticals
- Restaurants
- Semiconductors
- Steel manufacturers

Institutions
- Concrete penetrations for sidewall and pendant applications
- Correctional centers
- Mental health facilities

Seismically qualified.

FlexHead connections allow for independent movement between sub-mains and ceilings. They're the only flexible sprinkler connection to be qualified for use in Seismic Design Categories C, D, E and F.

FLEXHEAD®
INDUSTRIES
The pioneers in flexible fire protection

FBC SYSTEM COMPATIBLE · FM APPROVED · c UL us LISTED · LPCB

U.S. and international patents pending: #6,123,154, #6,119,734, #6,752,218, #7,032,680, #6,488,097.

The FlexHead name and logo are trademarks of FlexHead Industries.

FBC™ System Compatible indicates that this product has been tested, and is monitored on an ongoing basis, to assure its chemical compatibility with FlowGuard Gold®, BlazeMaster® and Corzan® pipe fittings. FBC™, FlowGuard Gold®, BlazeMaster® and Corzan® are licensed trademarks of The Lubrizol Corporation.

USGBC® and LEED® are registered trademarks of the U.S. Green Building Council.

56 Lowland Street
Holliston, Massachusetts 01746
toll-free 800-829-6975
(508) 893-9596
fax (508) 893-6020
info@flexhead.com
www.flexhead.com

5M/SDP/04-10