Model RFC30 LL (SIN RA3211)
Model RFC43 LL (SIN RA3212)
Model RFC49 LL (SIN RA3216)
Residential Flat Concealed Sprinklers

Bulletin 032 Rev. C

Specifically Listed for use in Multipurpose Systems that serve both domestic water and fire protection.

Plain Cover Plate

Perforated Cover Plate

Sprinkler Type

Residential Flat Concealed Sprinkler listed for a minimum design density of .05 gpm/ft^2 with "potable water".

- Model RFC30 LL
- Model RFC43 LL
- Model RFC49 LL

Features

1. National Sanitation Foundation (NSF) Certified to NSF/ANSI Standard 61 Annex G (Less than 0.25% Lead content).
2. Very low water flow requirements.
3. Cover plate attachment (Plain or Perforated) with 1/2" (13mm) total adjustment
4. Thread-on/off or Push-on/off cover attachment option.
5. Smooth Aesthetic ceiling profile.
6. Available in white, brass, chrome and black plated or custom painted finishes.

Patent Pending

Listing & Approvals

1. Listed by Underwriters Laboratories, and certified by UL for Canada (cULus)
2. NSF Cerified to NSF/ANSI Standard 61 Annex G

Product Description

Model RFC30 LL, RFC43 LL and RFC49 LL Concealed Residential Sprinklers are fast response residential fusible solder link automatic sprinklers. Residential sprinklers differ from standard sprinklers primarily in their response time and water distribution patterns. Model RFC30 LL, RFC43 LL and RFC49 LL sprinklers discharge water in a hemispherical pattern below the sprinkler deflector. Residential distribution patterns are higher and generally contain a finer droplet size than standard sprinkler patterns. The combination of speed of operation and high discharge pattern required for residential sprinklers has demonstrated, in fire testing, an ability for controlling residential fires, and thereby providing significant evacuation time for occupants. The RFC30 LL, RFC43 LL and RFC49 LL Sprinklers provide the best form of fire protection by combining an attractive appearance and ½" (13mm) of cover adjustment for ease of installation. The small diameter cover plate is easily and positively attached and blends into the ceiling, concealing the most dependable fire protection available, an automatic sprinkler system. The RFC30 LL, RFC43 LL and RFC49 LL are UL Listed and NSF Certified Residential Sprinklers to be installed in the residential "potable" water applications of any occupancy in accordance with NFPA 13, 13R, & 13D and meets all applicable low lead standards, .25% or less. The cover plate adjustability of the RFC30 LL, RFC43 LL and RFC49 LL can reduce the need for precise cutting of drop nipples. The threaded cover plate assembly can be adjusted without tools to fit accurately against the ceiling. The fire protection system need not be shut down to adjust or remove the cover plate assembly.

Application and Installation

For use in fire sprinkler systems that also supply potable water to a plumbing fixture or fixtures.

The RFC30 LL, RFC43 LL and RFC49 LL, for residential installations, use a 165°F (74°C) fusible solder link in a tuning fork style sprinkler frame with a drop-down deflector. This assembly is recessed into the ceiling and concealed by a flat cover plate. The cover plate is attached to the skirt, using 135°F (57°C) ordinary temperature classification solder. When the ceiling temperature rises, the solder holding the cover plate releases the cover allowing the deflector to drop into position and exposing the sprinkler inside to ceiling temperature. The subsequent operation of the solder link opens the waterway and causes the deflector to drop into position to distribute the discharging water in a hemispherical pattern below the sprinkler deflector. Any adjustment of thread engagement between the cover plate and cup will assure that the drop-down deflector is properly located below the ceiling. The residential distribution pattern contains a finer droplet size than a standard sprinkler, and the pattern produces significantly higher wall wetting. After a 2⅝" inch diameter hole is cut in the ceiling, the sprinkler is to be installed with the Model FC Wrench.

When installing a sprinkler, the wrench is first positioned into the sprinkler/cup assembly and around the hexagonal body of the sprinkler frame. The wrench must bottom out against the cup in order to ensure proper, safe installation. The sprinkler is then tightened into the pipe fitting. When inserting or removing the wrench from the sprinkler/cup assembly, care should be taken to prevent damage to the sprinkler. DO NOT WRENCH ON ANY OTHER PARTOF THE SPRINKLER / CUP ASSEMBLY. MODEL RFC30 LL, RFC43 LL AND RFC49 LL CONCEALED SPRINKLERS MUST BE INSTALLED ONLY WITH 135°F RATED COVERS.

Note: A leak tight ½" NPT (R1/2) sprinkler joint can be obtained with a torque of 8-18 ft-lbs (10,8 - 24,4 N-m). Do not tighten sprinklers over maximum recommended torque. It may cause leakage or impairment of the sprinklers.

Cover assemblies provide up to ½" (13mm) of adjustment. Turn the cover clockwise until the flange is in contact with the ceiling. For the push-on/thread-off option, the cover assembly is pushed onto the cup and final adjustment is made by turning the cover clockwise until the skirt flange makes full contact with the ceiling. Cover removal

Installation Data:

Model (SIN)	Thread Size Inch (mm)	Nominal Orifice Inch (mm)	Sprinkler Temp Rating		CCP Assembly Temp. Rating		Max. Ambient Temp.		K Factor	Max. Pressure psi (bar)
			°F	°C	°F	°C	°F	°C		
RFC 30 LL (RA3211)	½" (15)	21/64 (8,2)	165	74	135	57	100	38	3.0 (43.2)	175 (12)
RFC 43 LL (RA3212)	½" (15)	⅜ (10)	165	74	135	57	100	38	4.3 (62)	175 (12)
RFC 49 LL (RA3216)	½" (15)	7/16 (11)	165	74	135	57	100	38	4.9 (70.6)	175 (12)

Note: 1 bar = 100 Kpa

RFC 30 LL

Max. Coverage area Ft x Ft (m x m)	Max. Spacing Ft (m)	Ordinary Temp. Rating (165°F/74°C)		Top of Deflector to Ceiling Inch (mm)	Installation Type	Minimum Spacing Ft (m)
		Flow GPM (L/min)	Pressure PSI (bar)			
12 x 12 (3,6 x 3,6)	12 (3,6)	9 (34,1)	9.0 (0,62)	Smooth Ceilings ½ to 1 (13 to 25.4) Beamed Ceilings per NFPA 13D, 13R or 13 installed in beams ½ to 1 (13 to 25.4)	Concealed	8 (2,4)
14 x 14 (4,3 x 4,3)	14 (4,3)	10 (37,8)	11.0 (0,76)			

For Ceiling types refer to NFPA 13, 13R or 13D

RFC 43 LL

Max. Coverage area Ft x Ft (m x m)	Max. Spacing Ft (m)	Ordinary Temp. Rating (165°F/74°C)		Top of Deflector to Ceiling Inch (mm)	Installation Type	Minimum Spacing Ft (m)
		Flow GPM (L/min)	Pressure PSI (bar)			
12 x 12 (3,6 x 3,6)	12 (3,6)	12 (4,5)	7.8 (0,54)	Smooth Ceilings ½ to 1 (13 to 25.4) Beamed Ceilings per NFPA 13D, 13R or 13 installed in beams ½ to 1 (13 to 25.4)	Concealed	8 (2,4)
14 x 14 (4,3 x 4,3)	14 (4,3)	13 (49)	9.1 (0,63)			
16 x 16 (4,9 x 4,9)	16 (4,9)	13 (49)	9.1 (0,63)			
18 x 18 (5,5 x 5,5)	18 (5,5)	18 (68)	17.5 (1,21)			
20 x 20 (6,1 x 6,1)	20 (6,1)	21 (79)	23.8 (1,64)			

For Ceiling types refer to NFPA 13, 13R or 13D

RFC 49 LL

Max. Coverage area Ft x Ft (m x m)	Max. Spacing Ft (m)	Ordinary Temp. Rating (165°F/74°C)		Top of Deflector to Ceiling Inch (mm)	Installation Type	Minimum Spacing Ft (m)
		Flow GPM (L/min)	Pressure PSI (bar)			
12 x 12 (3,6 x 3,6)	12 (3,6)	13 (49)	7.0 (0,48)	Smooth Ceilings ½ to 1 (13 to 25.4) Beamed Ceilings per NFPA 13D, 13R or 13 installed in beams ½ to 1 (13 to 25.4)	Concealed	8 (2,4)
14 x 14 (4,3 x 4,3)	14 (4,3)	13 (49)	7.0 (0,48)			
16 x 16 (4,9 x 4,9)	16 (4,9)	13 (49)	7.0 (0,48)			
18 x 18 (5,5 x 5,5)	18 (5,5)	17 (64,3)	12.0 (0,83)			
20 x 20 (6,1 x 6,1)	20 (6,1)	20 (75,73)	16.7 (1,14)			

For Ceiling types refer to NFPA 13, 13R or 13D

requires turning in the counter-clockwise direction. **In ceilings that have a plenum space above the sprinkler, the plenum space may have neutral or negative pressurization but must not be positively pressurized. Inspect all sprinklers after installation to ensure that the gap between the cover plate and ceiling and the 4 slots in the cup are all open and free from any air flow impediment.**

Maintenance

Model RFC30 LL, RFC43 LL and RFC49 LL Concealed Sprinklers should be inspected quarterly and the sprinkler system maintained in accordance with NFPA25. Do not clean sprinklers with soap and water, ammonia or any other cleaning fluids. Remove dust by using a soft brush or gentle vacuuming. Remove any sprinkler cover plate assembly which has been painted (other than factory applied) or damaged in any way. A stock of spare sprinklers should be maintained to allow quick replacement of damaged or operated sprinklers. Prior to installation, sprinklers should be maintained in the original cartons and packaging until used to minimize the potential for damage to sprinklers that would cause improper operation or non-operation.

Model RFC30 LL, RFC43 LL and RFC49 LL Residential Concealed Sprinkler Specification

Sprinklers shall be cULus Listed and NSF-61 Annex G certified low flow residential concealed sprinklers with drop-down deflector and adjustable flat cover plate engineered for a minimum design density of 0.05gpm/ft^2. Sprinkler frame and deflector shall be of bronze frame construction having a ½" NPT thread.

Thermal element shall consist of an approved black-painted beryllium-nickel fusible solder link with symmetric lever mechanism, maintaining a Teflon-coated Belleville spring washer and machined brass cap water seal assembly containing no plastic parts. Sprinkler K-factors shall be a nominal 3.0 (43.2), 4.3 (62) and 4.9 (70.6), having a $^3/_8$" and $^7/_{16}$" orifice respectively. Temperature rating shall be Ordinary 165°F (74°C); cover plate temperature rating to be 135°F (57°C). Cover plate assembly shall consist of a brass cover plate and copper alloy retainer flange allowing a ½" cover plate adjustment. Any secure engagement between the cover plate and the cup will assure that the drop-down deflector is properly located below the ceiling. A plastic protective cap shall be provided and factory installed inside the sprinkler cup to protect the drop-down sprinkler deflector from damage, which could occur during construction before the cover plate is installed. Standard cover finish: [Chrome] [White] [Specialty – specify]. Residential concealed sprinklers shall be Reliable Model RFC30 LL, SIN RA3211 (Bulletin 032), RFC43 LL, SIN RA3212 (Bulletin 032) or Model RFC49 LL, SIN RA3216 (Bulletin 032).

Ordering Information

Specify:

1. Sprinkler Model
2. Cover Plate Finish
3. Thread-On or Push-On Feature

Cover Plate Finishes[1]

Standard Finishes
Chrome White Paint
Special Application Finishes[2]
Bright Brass Finished Bronze Black Plating Black Paint Off White Satin Chrome

[1] Other finishes and colors are available on special order. Consult factory for details. Coverplate custom paint is semi-gloss, unless specified otherwise.

[2] For the perforated style coverplate, consult factory for availability on these and other custom finishes.

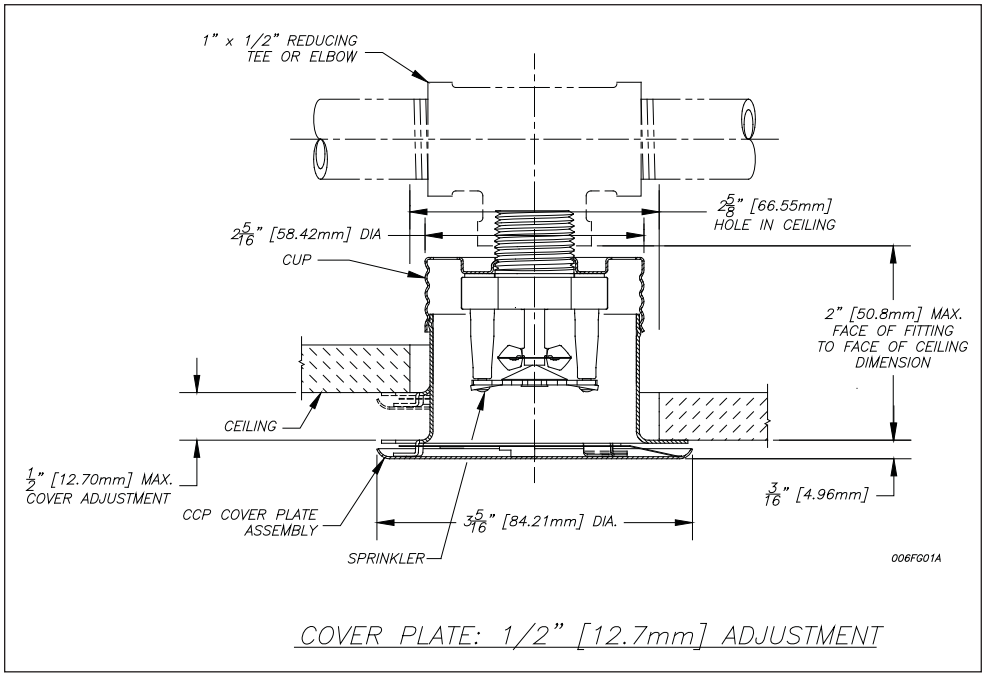

Uponor AquaPEX® White

Submittal Information
Revision C: Oct. 7, 2009

Project Information

Job Name:

Location: | Part No. Ordered:

Engineer: | Date Submitted:

Contractor: | Submitted By:

Manufacturer's Representative: | Approved By:

Technical Data

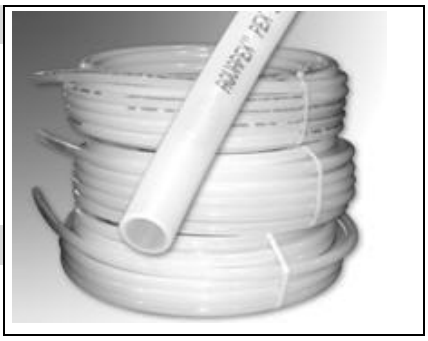

Material:	Crosslinked polyethylene PEX-a Engel Method; PEX 5006
Standard Grade Hydrostatic Ratings (PPI):	200°F (93°C) at 80 psi 180°F (82°C) at 100 psi 73.4°F (23°C) at 160 psi ½", ¾", and 1" AquaPEX® White only: 120°F (49°C) at 130 psi
Linear Expansion Rate:	1.10"/10°F (12°C)/100'

Product Information and Application Use

Uponor AquaPEX White is tubing used for hot and cold domestic potable water distribution, residential fire safety and radiant heating systems containing no ferrous corrodible components or where ferrous components are isolated from the tubing.

✓	Description	Part Number	I.D. (A)	O.D. (B)	Weight
☐	¼" Uponor AquaPEX White, 100-ft. coil	F1040250	0.241"	0.375"	4.0 lbs.
☐	⅜" Uponor AquaPEX White, 400-ft. coil	F1090375	0.350"	0.500"	20.0 lbs.
☐	⅜" Uponor AquaPEX White, 1,000-ft. coil	F1120375	0.350"	0.500"	44.0 lbs.
☐	½" Uponor AquaPEX White, 100-ft. coil*	F1040500	0.475"	0.625"	6.0 lbs.
☐	½" Uponor AquaPEX White, 300-ft. coil*	F1060500	0.475"	0.625"	18.0 lbs.
☐	½" Uponor AquaPEX White, 1,000-ft. coil*	F1120500	0.475"	0.625"	54.0 lbs.
☐	⅝" Uponor AquaPEX White, 300-ft. coil	F1060625	0.574"	0.750"	28.0 lbs.
☐	⅝" Uponor AquaPEX White, 1000-ft. coil	F1120625	0.574"	0.750"	86.0 lbs.
☐	¾" Uponor AquaPEX White, 100-ft. coil*	F1040750	0.671"	0.875"	10.0 lbs.
☐	¾" Uponor AquaPEX White, 300-ft. coil*	F1060750	0.671"	0.875"	34.0 lbs.
☐	¾" Uponor AquaPEX White, 500-ft. coil*	F1100750	0.671"	0.875"	54.0 lbs.
☐	1" Uponor AquaPEX White, 100-ft. coil*	F1041000	0.862"	1.125"	20.0 lbs.
☐	1" Uponor AquaPEX White, 300-ft. coil*	F1061000	0.862"	1.125"	56.0 lbs.
☐	1" Uponor AquaPEX White, 500-ft. coil*	F1101000	0.862"	1.125"	93.0 lbs.
☐	1¼" Uponor AquaPEX White, 100-ft. coil	F1061250	1.054"	1.375"	34.0 lbs.
☐	1¼" Uponor AquaPEX White, 300-ft. coil	F1021250	1.054"	1.375"	106.0 lbs.
☐	1½" Uponor AquaPEX White, 100-ft. coil	F1061500	1.244"	1.625"	44.0 lbs.
☐	1½" Uponor AquaPEX White, 300-ft. coil	F1021500	1.244"	1.625"	133.0 lbs.
☐	2" Uponor AquaPEX White, 100-ft. coil	F1062000	1.629"	2.125"	68.2 lbs.
☐	2" Uponor AquaPEX White, 200-ft. coil	F1052000	1.629"	2.125"	136.4 lbs.
☐	2" Uponor AquaPEX White, 300-ft. coil	F1022000	1.629"	2.125"	204.6 lbs.
☐	3" Uponor AquaPEX White, 100-ft. coil	F1063000	2.400"	3.125"	128.0 lbs.
☐	3" Uponor AquaPEX White, 350-ft. coil	F1023000	2.400"	3.125"	442.0 lbs.

Installation

Approved fittings are ProPEX® fittings[1] for sizes ⅜" through 2" AquaPEX. Use WIPEX™ fittings for 3" AquaPEX. Refer to the AquaPEX Professional Plumbing Installation Handbook, AquaSAFE™ Fire Safety Installation Guide or the Uponor Radiant Installation Handbook for details.

Standards	Codes	Listings
CSA B137.5; ASTM F876; ASTM F877; ASTM F1960; ASTM-E84; ASTM-E119/UL 263	IPC; UPC; NSPC; NPC of Canada	*½", ¾", 1" UL 1821; *ULC/ORD - C 199 P; IAPMO; CSA; HUD; WARNOCK HERSEY; NSF; ITS; UL; ICC; ANSI/NSF 14- and 61-certified; CAN/ULC S102.2; U.S.: ¾" diameter and smaller; Canada: 1" diameter and smaller

Related Applications

PEX-a Plumbing Systems
AquaSAFE Fire Safety Systems

Contact Information

Uponor, Inc.
5925 148th Street West
Apple Valley, MN 55124 USA
Phone: (800) 321-4739
Fax: (952) 891-2008
www.uponor-usa.com

Uponor Ltd.
2000 Argentia Rd., Plaza 1, Ste. 200
Mississauga, ON L5N 1W1 CANADA
Phone: (888) 994-7726
Fax: (800) 638-9517
www.uponor.ca

[1] ProPEX® is a registered trademark of Uponor, Inc. ProPEX™ is a trademark of Uponor Ltd.

ProPEX® Ring

Submittal Information
Revision A: March 17, 2009

Project Information

Job Name:

Location: | Part No. Ordered:

Engineer: | Date Submitted:

Contractor: | Submitted By:

Manufacturer's Representative: | Approved By:

Technical Data

Material:	PEX-a (Engel Method)
Density:	926 to 940 kg/m^3
Degree of Crosslinking:	70% to 89%

Product Information and Application Use

Manufactured from PEX-a material, Uponor ProPEX® Rings are required to make a proper ProPEX connection.[1] Red print on the rings indicates hot lines. The ½" and ¾" ProPEX rings with stop includes a leading edge chamfer and stop edge.

✓	Description	Part Number	Length	i.d.	o.d.	Weight
☐	ProPEX Ring, ⅜"	Q4690302	0.54"	0.49"	0.74"	0.005 lbs.
☐	ProPEX Ring with Stop, ½" (red print)	Q4690511	0.63"	0.63"	0.87"	0.006 lbs.
☐	ProPEX Ring with Stop, ½"	Q4690512	0.63"	0.63"	0.87"	0.006 lbs.
☐	ProPEX Ring, ⅝"	Q4680625	0.79"	0.75"	1.00"	0.008 lbs.
☐	ProPEX Ring with Stop, ¾"	Q4690756	0.87"	0.88"	1.13"	0.012 lbs.
☐	ProPEX Ring, 1"	Q4681000	1.10"	1.13"	1.42"	0.020 lbs.
☐	ProPEX Ring, 1¼"	Q4681250	1.35"	1.38"	1.66"	0.030 lbs.
☐	ProPEX Ring, 1½"	Q4681500	1.61"	1.63"	1.91"	0.040 lbs.
☐	ProPEX Ring, 2"	Q4682000	1.97"	2.14"	2.61"	0.133 lbs.

Installation

Square cut the Uponor ProPEX tubing. Remove excess material. Slide the ProPEX Ring over the end of the tubing (maximum $^1/_{16}$" over-hang). When using the ½" ProPEX Ring with stop edge, slide the ring on (i.e., chamfered edge first) until the end of the tubing contacts the stop edge. Expand tubing and ring. Rotate tool a quarter turn after each expansion to prevent the formation of grooves. Remove the expansion tool and fully seat the tubing and ring against the shoulder of the fitting. You should make ProPEX connections at temperatures above 5°F /-15°C. For more information, refer to the AquaPEX® Professional Plumbing Installation Handbook, AQUASAFE® Fire Safety Installation Guide or the Uponor Radiant Installation Handbook.

Standards

ASTM F1960

Codes

IPC; UPC; NSPC; NPC of Canada

Listings

UL 1821 (½", ¾" and 1"); ULC/ORD - C 199 P (½", ¾" and 1"); HUD MR 1269; ICC ESR 1099; ANSI/NSF 14- and 61-certified

Related Applications

PEX-a Plumbing Systems
Radiant Heating and Cooling Systems
AQUASAFE Fire Safety Systems

Contact Information

Uponor, Inc.
5925 148th Street West
Apple Valley, MN 55124 USA
Phone: (800) 321-4739
Fax: (952) 891-2008
www.uponor-usa.com

Uponor Ltd.
2000 Argentia Rd., Plaza 1, Ste. 200
Mississauga, ON L5N 1W1 CANADA
Phone: (888) 994-7726
Fax: (800) 638-9517
www.uponor.ca

[1]ProPEX® is a registered trademark of Uponor, Inc. ProPEX™ is a trademark of Uponor Ltd.

ProPEX® Engineered Polymer (EP) Tee

Submittal Information
Revision D: June 8, 2012

Project Information

Job Name:

Location: Part No. Ordered:

Engineer: Date Submitted:

Contractor: Submitted By:

Manufacturer's Representative: Approved By:

Technical Data

Material:	UDEL® Polysulfone, 20% Glass-reinforced (½" to 1") Acudel® Modified Polyphenylsulfone (1¼" to 1½") Radel® Polyphenylsulfone (2")
Maximum Temperature (no pressure):	320°F (160°C)
Maximum Working Temperature/Pressure:	210°F (99°C) at 150 psi (1,034 kPa)

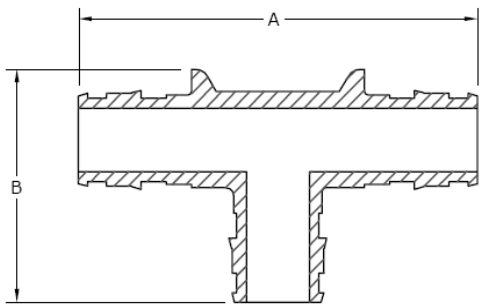

Product Information and Application Use

The ProPEX® Engineered Polymer (EP) Tee makes diverting connections for Uponor crosslinked polyethylene (PEX-a) tubing for use in hot and cold domestic potable water systems, residential fire sprinkler systems and hydronic radiant heating and cooling systems. Each end of the tee is manufactured with an Uponor ProPEX fitting for connections to Uponor AquaPEX® or Wirsbo hePEX™ tubing.[1]
Note: Branch size is listed last in the part descriptions.

✓ Description	Part Number	A	B	Weight
☐ ProPEX EP Tee, ½" PEX x ½" PEX x ½" PEX	Q4755050	2.50"	1.53"	0.02 lbs.
☐ ProPEX EP Tee, ¾" PEX x ¾" PEX x ¾" PEX	Q4757575	3.30"	1.94"	0.05 lbs.
☐ ProPEX EP Tee, 1" PEX x 1" PEX x 1" PEX	Q4751010	4.10"	2.47"	0.07 lbs.
☐ ProPEX EP Tee, 1¼" PEX x 1¼" PEX x 1¼" PEX	Q4751313	4.80"	3.22"	0.15 lbs.
☐ ProPEX EP Tee, 1½" PEX x 1½" PEX x 1½" PEX	Q4751515	5.80"	3.82"	0.25 lbs.
☐ ProPEX EP Tee, 2" PEX x 2" PEX x 2" PEX	Q4752000	7.45"	4.79"	0.38 lbs.

Installation

Use the appropriate ProPEX Ring for PEX-a tubing. Refer to the Uponor AquaPEX® Professional Plumbing Installation Guide, AquaSAFE™ Residential Fire Sprinkler Installation Guide or Uponor Radiant Installation Handbook for additional information.

Standards

CAN/CSA B137.5; ASTM F877; ASTM F1960

Codes

IPC; UPC; NSPC; NPC of Canada

Listings

IAPMO 3558; ANSI/NSF 14- and 61-certified; HUD MR 1269; ICC ESR 1099; UL 1821; ULC/ORD-C199P

Related Applications

PEX-a Plumbing Systems
Hydronic Radiant Heating and Cooling Systems
Snow Melting Systems
Turf Conditioning Systems
Permafrost Prevention Systems
AquaSAFE Fire Safety Systems

Contact Information

Uponor, Inc.
5925 148th Street West
Apple Valley, MN 55124 USA
Phone: (800) 321-4739
Fax: (952) 891-2008
www.uponorpro.com

Uponor Ltd.
2000 Argentia Road, Plaza 1, Suite 200
Mississauga, ON L5N 1W1 CANADA
Phone: (888) 994-7726
Fax: (800) 638-9517
www.uponorpro.com

[1] ProPEX® is a registered trademark of Uponor, Inc. ProPEX™ is a trademark of Uponor Ltd.

ProPEX® Engineered Polymer (EP) Reducing Tee

Submittal Information
Revision E: June 8, 2012

Project Information

Job Name:

Location: | Part No. Ordered:

Engineer: | Date Submitted:

Contractor: | Submitted By:

Manufacturer's Representative: | Approved By:

Technical Data

Material:	UDEL® Polysulfone, 20% Glass-reinforced (½ to 1") Acudel® Modified Polyphenylsulfone (1¼" to 1½") Radel® R Polyphenylsulfone (2")
Maximum Temperature (no pressure):	320°F (160°C)
Max. Working Temperature/Pressure:	210°F (99°C) at 150 psi (1,034 kPa)

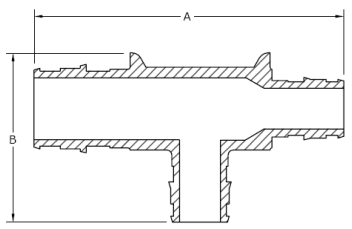

Product Information and Application Use

The ProPEX® Engineered Polymer (EP) Reducing Tee makes diverting connections for Uponor crosslinked polyethylene (PEX-a) tubing for use in hot and cold domestic potable water systems, residential fire sprinkler systems and hydronic radiant heating and cooling systems. Each end of the tee is manufactured with an Uponor ProPEX fitting for connections to Uponor AquaPEX® or Wirsbo hePEX™ tubing.[1] **Note:** Branch size is listed last in the part descriptions.

✓	Description	Part Number	Length (A)	Height (B)	Weight
☐	ProPEX EP Reducing Tee, ½" PEX x ½" PEX x ¾" PEX	Q4755575	2.86"	1.76"	0.03 lbs.
☐	ProPEX EP Reducing Tee, ¾" PEX x ½" PEX x ½" PEX	Q4757555	3.10"	1.70"	0.04 lbs.
☐	ProPEX EP Reducing Tee, ¾" PEX x ½" PEX x ¾" PEX	Q4757557	3.10"	1.94"	0.04 lbs.
☐	ProPEX EP Reducing Tee, ¾" PEX x ¾" PEX x ⅝" PEX	Q4757563	3.30"	1.85"	0.05 lbs.
☐	ProPEX EP Reducing Tee, ¾" PEX x ¾" PEX x ½" PEX	Q4757550	3.30"	1.70"	0.04 lbs.
☐	ProPEX EP Reducing Tee, ¾" PEX x ¾" PEX x 1" PEX	Q4757710	3.64"	2.32"	0.08 lbs.
☐	ProPEX EP Reducing Tee, 1" PEX x ¾" PEX x ¾" PEX	Q4751775	3.90"	2.24"	0.08 lbs.
☐	ProPEX EP Reducing Tee, 1" PEX x ¾" PEX x 1" PEX	Q4751751	3.90"	2.47"	0.08 lbs.
☐	ProPEX EP Reducing Tee, 1" PEX x 1" PEX x ½" PEX	Q4751150	4.10"	2.00"	0.08 lbs.
☐	ProPEX EP Reducing Tee, 1" PEX x 1" PEX x ¾" PEX	Q4751175	4.10"	2.24"	0.09 lbs.
☐	ProPEX EP Reducing Tee, 1¼" PEX x 1" PEX x ¾" PEX	Q4751317	4.60"	2.73"	0.11 lbs.
☐	ProPEX EP Reducing Tee, 1¼" PEX x 1" PEX x 1" PEX	Q4751311	4.60"	2.97"	0.12 lbs.
☐	ProPEX EP Reducing Tee, 1¼" PEX x 1¼" PEX x ¾" PEX	Q4751337	4.80"	2.73"	0.13 lbs.
☐	ProPEX EP Reducing Tee, 1¼" PEX x 1¼" PEX x 1" PEX	Q4751331	4.80"	2.97"	0.14 lbs.
☐	ProPEX EP Reducing Tee, 1½" PEX x 1" PEX x ¾" PEX	Q4751517	5.25"	3.06"	0.17 lbs.
☐	ProPEX EP Reducing Tee, 1½" PEX x 1" PEX x 1" PEX	Q4751511	5.25"	3.30"	0.18 lbs.
☐	ProPEX EP Reducing Tee, 1½" PEX x 1¼" PEX x ¾" PEX	Q4751537	5.50"	2.65"	0.18 lbs.
☐	ProPEX EP Reducing Tee, 1½" PEX x 1¼" PEX x 1" PEX	Q4751531	5.50"	2.85"	0.19 lbs.
☐	ProPEX EP Reducing Tee, 1½" PEX x 1¼" PEX x 1¼" PEX	Q4751533	5.50"	3.15"	0.21 lbs.
☐	ProPEX EP Reducing Tee, 1½" PEX x 1½" PEX x ¾" PEX	Q4751557	5.80"	3.06"	0.20 lbs.
☐	ProPEX EP Reducing Tee, 1½" PEX x 1½" PEX x 1" PEX	Q4751551	5.75"	3.30"	0.21 lbs.
☐	ProPEX EP Reducing Tee, 1½" PEX x 1½" PEX x 1¼" PEX	Q4751553	5.80"	3.56"	0.22 lbs.
☐	ProPEX EP Reducing Tee, 2" PEX x 1½" PEX x ¾" PEX	Q4752575	6.62"	3.30"	0.30 lbs.
☐	ProPEX EP Reducing Tee, 2" PEX x 1½" PEX x 1" PEX	Q4752051	6.50"	3.40"	0.30 lbs.
☐	ProPEX EP Reducing Tee, 2" PEX x 1½" PEX x 1¼" PEX	Q4752053	6.62"	3.80"	0.34 lbs.
☐	ProPEX EP Reducing Tee, 2" PEX x 1½" PEX x 1½" PEX	Q4752055	6.62"	4.10"	0.35 lbs.
☐	ProPEX EP Reducing Tee, 2" PEX x 2" PEX x ¾" PEX	Q4752275	6.93"	3.30"	0.34 lbs.
☐	ProPEX EP Reducing Tee, 2" PEX x 2" PEX x 1" PEX	Q4752210	6.93"	3.40"	0.36 lbs.
☐	ProPEX EP Reducing Tee, 2" PEX x 2" PEX x 1¼" PEX	Q4752213	6.62"	3.80"	0.37 lbs.
☐	ProPEX EP Reducing Tee, 2" PEX x 2" PEX x 1½" PEX	Q4752215	7.13"	4.10"	0.44 lbs.

Installation

Use the appropriate ProPEX Ring for PEX-a tubing. Refer to the Uponor AquaPEX® Professional Plumbing Installation Guide, AquaSAFE™ Residential Fire Sprinkler Installation Guide or Uponor Radiant Installation Handbook for additional information.

Standards

CAN/CSA B137.5; ASTM F877; ASTM F1960

Codes

IPC; UPC; NSPC; NPC of Canada

Listings

NSF U.P. CODE; ANSI/NSF 14- and 61-certified; HUD MR 1269; ICC ESR 1099; UL 1821 and ULC/ORD-C199P (except Q4757563)

Related Applications

PEX-a Plumbing Systems
Hydronic Radiant Heating and Cooling Systems
Snow and Ice Melting Systems
Turf Conditioning Systems
Permafrost Protection Systems
AquaSAFE Fire Safety Systems

Contact Information

Uponor, Inc.
5925 148th Street West
Apple Valley, MN 55124 USA
Phone: (800) 321-4739
Fax: (952) 891-2008
www.uponorpro.com

Uponor Ltd.
2000 Argentia Rd., Plaza 1, Ste. 200
Mississauga, ON L5N 1W1 CANADA
Phone: (888) 994-7726
Fax: (800) 638-9517
www.uponorpro.com

[1] ProPEX® is a registered trademark of Uponor, Inc. ProPEX™ is a trademark of Uponor Ltd.

ProPEX® Engineered Polymer (EP) Elbow

Submittal Information
Revision D: June 8, 2012

Project Information

Job Name:

Location: Part No. Ordered:

Engineer: Date Submitted:

Contractor: Submitted By:

Manufacturer's Representative: Approved By:

Technical Data

Material:	UDEL® Polysulfone, 20% Glass-reinforced (½ to 1") Acudel® Modified Polyphenylsulfone (1¼" to 1½") Radel® R Polyphenylsulfone (2")
Maximum Temperature (no pressure):	320°F (160°C)
Maximum Working Temperature/Pressure:	210°F (99°C) at 150 psi (1,034 kPa)

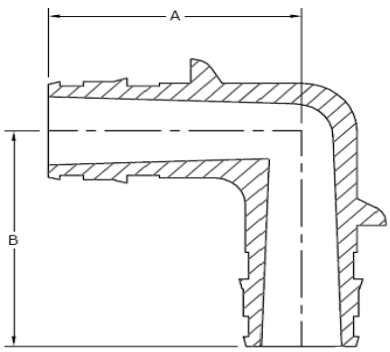

Product Information and Application Use

The ProPEX® Engineered Polymer (EP) Elbow makes 90-degree connections for Uponor crosslinked polyethylene (PEX-a) tubing for use in hot and cold domestic potable water systems, residential fire safety and hydronic radiant heating and cooling systems. Each end of the elbow is manufactured with an Uponor ProPEX fitting for connections to Uponor AquaPEX® or Wirsbo hePEX™ tubing.[1]

✓ Description	Part Number	A	B	Weight
☐ ProPEX EP Elbow, ½" PEX x ½" PEX	Q4760500	1.30"	1.30"	0.02 lbs.
☐ ProPEX EP Elbow, ¾" PEX x ¾" PEX	Q4760750	1.60"	1.60"	0.03 lbs.
☐ ProPEX EP Elbow, 1" PEX x 1" PEX	Q4761000	2.10"	2.10"	0.07 lbs.
☐ ProPEX EP Elbow, 1¼" PEX x 1¼" PEX	Q4761250	2.45"	2.45"	0.11 lbs.
☐ ProPEX EP Elbow, 1½" PEX x 1½" PEX	Q4761500	2.77"	2.77"	0.18 lbs.
☐ ProPEX EP Elbow, 2" PEX x 2" PEX	Q4762000	3.76"	3.76"	0.30 lbs.

Installation

Use the appropriate ProPEX Ring for PEX-a tubing. Refer to the Uponor AquaPEX® Professional Plumbing Installation Guide, AquaSAFE™ Residential Fire Sprinkler Installation Guide or Uponor Radiant Installation Handbook for additional information.

Standards

CAN/CSA B137.5; ASTM F877; ASTM F1960

Codes

IPC; UPC; NSPC; NPC of Canada

Listings

IAPMO 3558; ANSI/NSF 14- and 61-certified; HUD MR 1269; ICC ESR 1099; UL 1821; ULC/ORD-C199P

Related Applications

PEX-a Plumbing Systems
Hydronic Radiant Heating and Cooling Systems
Snow Melting Systems
Turf Conditioning Systems
Permafrost Prevention Systems
AquaSAFE Fire Safety Systems

Contact Information

Uponor, Inc.
5925 148th Street West
Apple Valley, MN 55124 USA
Phone: (800) 321-4739
Fax: (952) 891-2008
www.uponorpro.com

Uponor Ltd.
2000 Argentia Road, Plaza 1, Suite 200
Mississauga, ON L5N 1W1 CANADA
Phone: (888) 994-7726
Fax: (800) 638-9517
www.uponorpro.com

[1] ProPEX® is a registered trademark of Uponor, Inc. ProPEX™ is a trademark of Uponor Ltd.

ProPEX® Fire Sprinkler Adapter

Submittal Information
Revision B: March 17, 2009

Project Information

Job Name:

Location: | Part No. Ordered:

Engineer: | Date Submitted:

Contractor: | Submitted By:

Manufacturer's Representative: | Approved By:

Technical Data

Material: 300 Series Stainless Steel

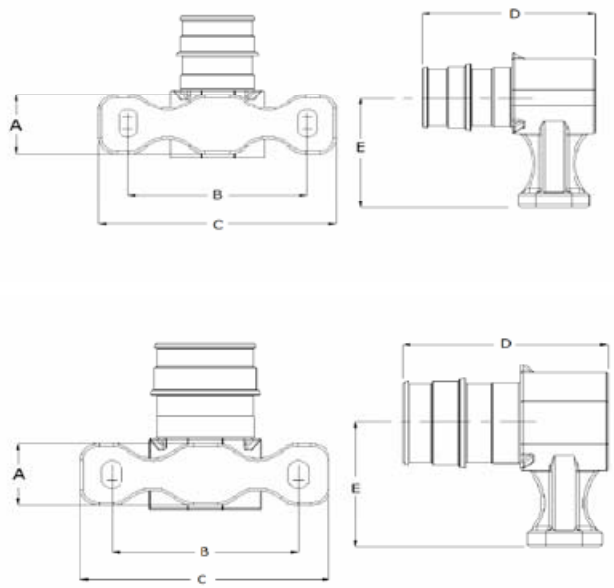

Product Information and Application Use

Use the ProPEX® Fire Sprinkler Adapter in conjunction with the appropriate sprinkler to provide a multi-purpose residential fire sprinkler system[1]. For residential applications, the system is installed with the cold-potable portion of the Uponor plumbing system. Make connections with Uponor ProPEX fittings. These fittings are designed for use only with ¾" or 1" AquaPEX® White tubing in the Uponor AQUASAFE® Looped System.

✓	Description	Part Number	A	B	C	D	E	Weight
☐	ProPEX Fire Sprinkler Adapter, ¾" PEX x ½" FNPT	Q7517550	0.75"	1.88"	2.50"	1.82"	1.41"	0.268 lbs.
☐	ProPEX Fire Sprinkler Adapter, 1" PEX x ½" FNPT	Q7511050	0.75"	1.88"	2.50"	2.06"	1.54"	0.408 lbs.

Installation

Use appropriate ProPEX Ring for connecting the tubing. Refer to the AquaPEX Installation Handbook or the Uponor AQUASAFE® Installation Guide for additional information.

Standards

CAN/CSA B137.5; ASTM F877; ASTM F 1960

Codes

IPC; UPC; NSPC; IRC; IMC; NPC of Canada

Listings

ANSI/NSF 14- and 61-certified; U.P. Code; ICC ESR 1099; HUD MR 1269; UL 1821; ULC/ORD - C 199 P

Related Applications

PEX-a Plumbing Systems
AQUASAFE Fire Safety Systems

Contact Information

Uponor, Inc.
5925 148th Street West
Apple Valley, MN 55124 USA
Phone: (800) 321-4739
Fax: (952) 891-2008
www.uponor-usa.com

Uponor Ltd.
2000 Argentia Rd., Plaza 1, Ste. 200
Mississauga, ON L5N 1W1 CANADA
Phone: (888) 994-7726
Fax: (800) 638-9517
www.uponor.ca

[1]ProPEX® is a registered trademark of Uponor, Inc. ProPEX™ is a trademark of Uponor Ltd.

Reliable®
TECHNOLOGY • QUALITY • SERVICE

News
September 2011

The Design Criteria for Sloped & Sloped Beamed Ceilings in NFPA 13D One and Two Family Dwellings & Manufactured Homes Has Changed.

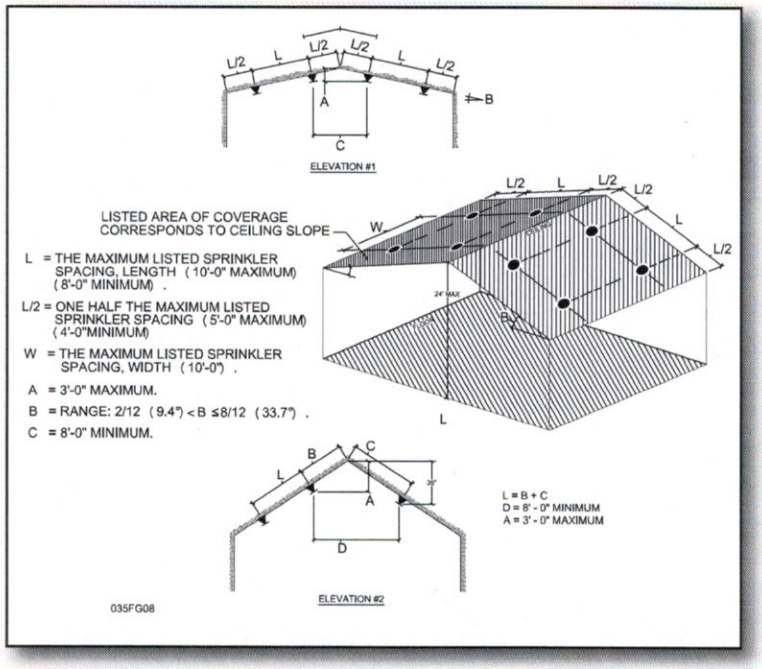

A Tentative Interim Amendment (TIA No.1028R) to NFPA 13D for 2010 has been issued by the NFPA Standards Council.

Testing supported by The Fire Protection Research Foundation indicates that residential sprinklers listed for applications with smooth, flat ceilings can meet the stated purpose in NFPA 13D standards when installed on a sloped or sloped and beamed ceiling.

Sloped and Sloped/Beamed Ceilings, under certain conditions, can now be protected with residential sprinklers based upon a maximum two (2) sprinkler demand that has the same flow rate as the sprinklers smooth, flat ceiling listing.

The TIA No.1028R revises NFPA 13D - 2010 edition sections 8.1.2, 8.1.3, A.8.1.2, and A.8.1.3.
Please read and adhere to these sections for the complete new design criteria.

A brief recap:
The sprinklers in the design area shall be all of the sprinklers in a compartment, up to a maximum of two, which require the greatest demand for:

- Smooth, flat ceilings to a maximum 24 feet in height.
- Smooth, ceilings (with no beams) sloped up to 8/12 and a maximum ceiling height of 24' above the floor.
- A ceiling with beams up to 14" deep sloped up to 8/12 and a maximum ceiling height of 24' above the floor. Pendent sprinklers shall be installed under the beams and the compartment cannot exceed 600 square feet.
- A ceiling with beams of any depth sloped up to 8/12 and a maximum ceiling height of 24' above the floor. Sidewall or pendent sprinklers shall be installed in each pocket formed by the beams and the compartment cannot exceed 600 square feet.

All Reliable residential sprinklers can be used for these applications based upon the spacing, flow, and pressure as listed for smooth and flat ceilings. (See Bulletins: 135, 006, 033 and 032).

This TIA is for 13D applications only. Changes to 13R will be in the 2013 Edition. Our special 10' x 10' spacing listings for sloped ceilings are still advantageous for 13R installations. (See Table 9, Bulletin 035).

For any questions, please contact Technical Services at 1-800-55-RASCO.