CT ENGINEERING INC

180 Nickerson St.
Suite 302
Seattle, WA 98109
(206) 285-4512(V)
(206) 285-0618(F)

V - BULLETIN CT-2

Date: **February 25th, 2016**	Number: **CT-2**	Project #: 15160
Project Name: Juanita Farmhouse Cottages – Detention Vault		Attached: AMICO catalog pages
Number of Pages: 5		

Subject: Bar grating substitution request

Drawings affected: SD3

Description / Action:
This bulletin provides design clarification, variation requests or additional structural direction for the Juanita Farmhouse Cottages – Detention Vault project located in Kirkland, Washington. This bulletin was issued after receipt of a substitution request from the contractor via email.

It is structurally acceptable to provide the AMICO bar grating product attached in lieu of the McNichols product provided the grating and accessories are hot dip galvanized per structural notes section "STEEL GRATING" / SD1. After review of the AMICO product we understand that the bearing bar size is 3 ½" X 5/16" spaced at 1 3/16" O.C. with cross bars at 4" O.C. although the submittal is silent regarding the hot dip galvanization. Page 4 of 4 specifies that the accessories are galvanized, therefore the accessories are acceptable as submitted.

Issued by: BJM

Distribution: Architect / CT Engineering Inc.

02/25/2016

AMICO

Gratings and Expanded Metals

bar grating

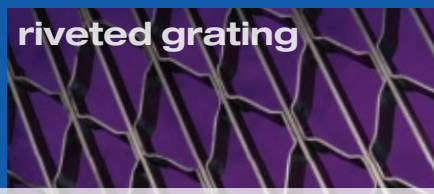
riveted grating

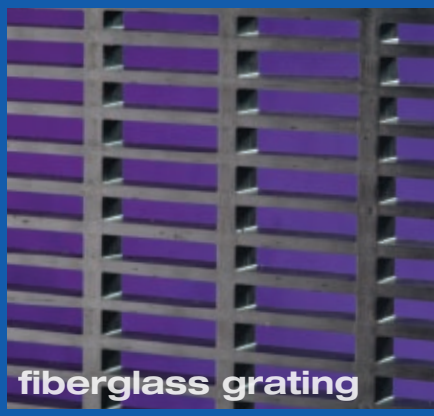
fiberglass grating

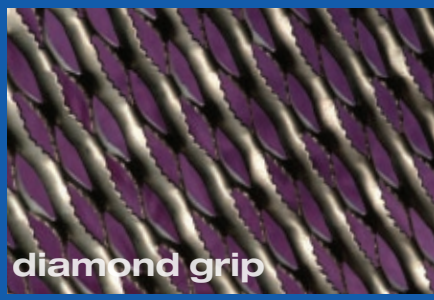
diamond grip

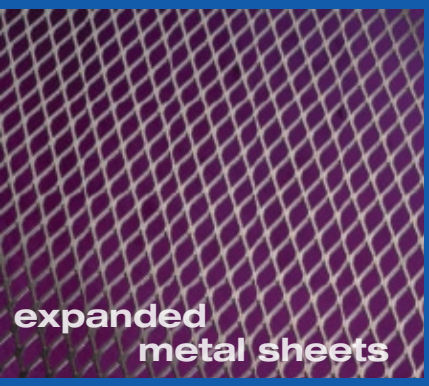
expanded metal sheets

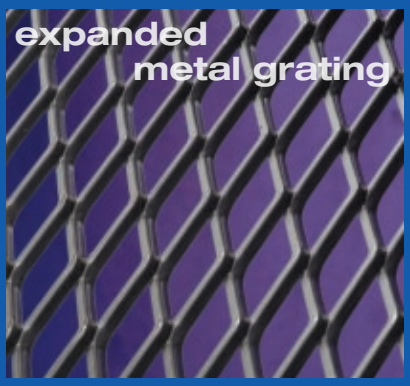
expanded metal grating

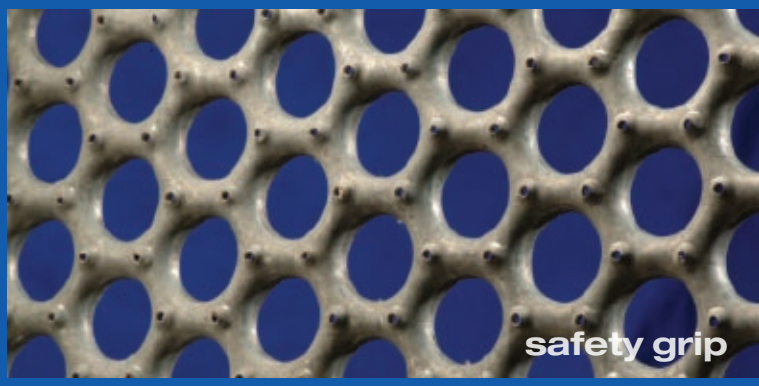
safety grip

A GIBRALTAR INDUSTRIES COMPANY QUALITY PRODUCTS – COAST TO COAST

Steel Bar Grating Heavy-Duty

HEAVY-DUTY WELDED (H) 1-3/16" C/C Bearing Bars

19-H-4

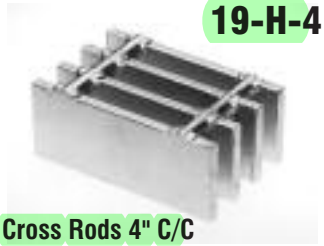

Cross Rods 4" C/C

19-H-2

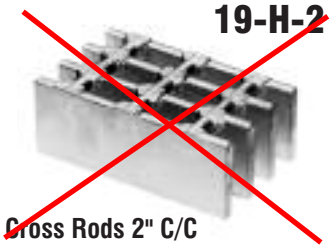

Cross Rods 2" C/C

NON-SERRATED & SERRATED

U = safe uniform load, psf (page 93)
C = safe concentrated load, psf (page 93)
D = deflection, inches
E = modulus of elasticity, 29,000,000 psi
F = fiber stress, 20,000 psi

Material: ASTM A-36

Serrated Bars: For serrated grating, the depth of grating required for a specified load is 1/4" deeper than that shown in the table.

General: Loads and deflections are theoretical and based on static loading.

Deflection: Spans and loads to the right of the bold line exceed 1/4" deflection for uniform load of 100 psf which provides safe pedestrian comfort. These can be exceeded for other types of loads with engineer's approval. For deflections of uniform and concentrated loads, consult AMICO-Klemp®'s engineering departments.

LOAD & DEFLECTION TABLE

Bar Size	Symbol	Approx. Weight psf	Sec. Mod Per Ft. Of Width		SPAN (Direction of Bearing Bar) 24"	30"	36"	42"	48"	54"	60"	66"	72"	84"	96"
1" x 1/4"	19-H-4	9.5	0.421	U	1,404	898	624	458	351	277	225	186	156	115	88
	19-H-2	10.1		C	1,404	1,123	936	802	702	624	561	510	468	401	351
1" x 5/16"	19-H-4	12.1	0.526	U	1,754	1,123	780	573	439	347	281	232	195	143	110
	19-H-2	13.3		C	1,754	1,404	1,170	1,003	877	780	702	638	585	501	439
1" x 3/8"	19-H-4	14.3	0.632	U	2,105	1,347	936	687	526	416	337	278	234	172	132
	19-H-2	15.4		C	2,105	1,684	1,404	1,203	1,053	936	842	766	702	602	526
1-1/4" x 1/4"	19-H-4	11.7	0.658	U	2,193	1,404	975	716	548	433	351	290	244	179	137
	19-H-2	12.3		C	2,193	1,754	1,462	1,253	1,096	975	877	797	731	627	548
1-1/4" x 5/16"	19-H-4	14.3	0.822	U	2,741	1,754	1,218	895	685	541	439	362	305	224	171
	19-H-2	16.0		C	2,741	2,193	1,827	1,566	1,371	1,218	1,096	997	914	783	685
1-1/4" x 3/8"	19-H-4	17.6	0.987	U	3,289	2,105	1,462	1,074	822	650	526	435	365	269	206
	19-H-2	18.7		C	3,289	2,632	2,193	1,880	1,645	1,462	1,316	1,196	1,096	940	822
1-1/2" x 1/4"	19-H-4	13.9	0.947	U	3,158	2,021	1,404	1,031	789	624	505	418	351	258	197
	19-H-2	14.5		C	3,158	2,526	2,105	1,805	1,579	1,404	1,263	1,148	1,053	902	789
1-1/2" x 5/16"	19-H-4	17.8	1.184	U	3,947	2,526	1,754	1,289	987	780	632	522	439	322	247
	19-H-2	18.8		C	3,947	3,158	2,632	2,256	1,974	1,754	1,579	1,435	1,316	1,128	987
1-1/2" x 3/8"	19-H-4	20.9	1.421	U	4,737	3,032	2,105	1,547	1,184	936	758	626	526	387	296
	19-H-2	22.0		C	4,737	3,789	3,158	2,707	2,368	2,105	1,895	1,722	1,579	1,353	1,184
1-3/4" x 1/4"	19-H-4	16.1	1.289	U	4,298	2,751	1,910	1,404	1,075	849	688	568	478	351	269
	19-H-2	16.7		C	4,298	3,439	2,865	2,456	2,149	1,910	1,719	1,563	1,433	1,228	1,075
1-3/4" x 5/16"	19-H-4	20.4	1.612	U	5,373	3,439	2,388	1,754	1,343	1,061	860	710	597	439	336
	19-H-2	21.5		C	5,373	4,298	3,582	3,070	2,686	2,388	2,149	1,954	1,791	1,535	1,343
1-3/4" x 3/8"	19-H-4	24.2	1.934	U	6,447	4,126	2,865	2,105	1,612	1,274	1,032	853	716	526	403
	19-H-2	25.3		C	6,447	5,158	4,298	3,684	3,224	2,865	2,579	2,344	2,149	1,842	1,612
2" x 1/4"	19-H-4	18.3	1.684	U	5,614	3,593	2,495	1,833	1,404	1,109	898	742	624	458	351
	19-H-2	18.9		C	5,614	4,491	3,743	3,208	2,807	2,495	2,246	2,041	1,871	1,604	1,404
2" x 5/16"	19-H-4	23.1	2.105	U	7,018	4,491	3,119	2,291	1,754	1,386	1,123	928	780	573	439
	19-H-2	24.6		C	7,018	5,614	4,678	4,010	3,509	3,119	2,807	2,552	2,339	2,005	1,754
2" x 3/8"	19-H-4	27.5	2.526	U	8,421	5,389	3,743	2,750	2,105	1,663	1,347	1,114	936	687	526
	19-H-2	28.6		C	8,421	6,737	5,614	4,812	4,211	3,743	3,368	3,062	2,807	2,406	2,105
2-1/4" x 1/4"	19-H-4	20.5	2.132	U	7,105	4,547	3,158	2,320	1,776	1,404	1,137	940	789	580	444
	19-H-2	21.1		C	7,105	5,684	4,737	4,060	3,553	3,158	2,842	2,584	2,368	2,030	1,776
2-1/4" x 5/16"	19-H-4	25.9	2.664	U	8,882	5,684	3,947	2,900	2,220	1,754	1,421	1,174	987	725	555
	19-H-2	27.0		C	8,882	7,105	5,921	5,075	4,441	3,947	3,553	3,230	2,961	2,538	2,220
2-1/4" x 3/8"	19-H-4	30.8	3.197	U	10,658	6,821	4,737	3,480	2,664	2,105	1,705	1,409	1,184	870	666
	19-H-2	31.9		C	10,658	8,526	7,105	6,090	5,329	4,737	4,263	3,876	3,553	3,045	2,664
2-1/2" x 1/4"	19-H-4	22.7	2.632	U	8,772	5,614	3,899	2,864	2,193	1,733	1,404	1,160	975	716	548
	19-H-2	23.3		C	8,772	7,018	5,848	5,013	4,386	3,899	3,509	3,190	2,924	2,506	2,193
2-1/2" x 5/16"	19-H-4	28.6	3.289	U	10,965	7,018	4,873	3,580	2,741	2,166	1,754	1,450	1,218	895	685
	19-H-2	29.8		C	10,965	8,772	7,310	6,266	5,482	4,873	4,386	3,987	3,655	3,133	2,741
2-1/2" x 3/8"	19-H-4	34.1	3.947	U	13,158	8,421	5,848	4,296	3,289	2,599	2,105	1,740	1,462	1,074	822
	19-H-2	35.2		C	13,158	10,526	8,772	7,519	6,579	5,848	5,263	4,785	4,386	3,759	3,289
2-3/4" x 1/4"	19-H-4	24.9	3.184	U	10,614	6,793	4,717	3,466	2,654	2,097	1,698	1,404	1,179	866	663
	19-H-2	25.6		C	10,614	8,491	7,076	6,065	5,307	4,717	4,246	3,860	3,538	3,033	2,654
2-3/4" x 5/16"	19-H-4	31.8	3.980	U	13,268	8,491	5,897	4,332	3,317	2,621	2,123	1,754	1,474	1,083	829
	19-H-2	33.3		C	13,268	10,614	8,845	7,581	6,634	5,897	5,307	4,825	4,423	3,791	3,317
2-3/4" x 3/8"	19-H-4	37.8	4.776	U	15,921	10,189	7,076	5,199	3,980	3,145	2,547	2,105	1,769	1,300	995
	19-H-2	39.3		C	15,921	12,737	10,614	9,098	7,961	7,076	6,368	5,789	5,307	4,549	3,980

Steel Bar Grating Heavy-Duty

19-H-4 ~~& 19-H-2~~ *~~(continued)~~*

NON-SERRATED ~~& SERRATED~~

LOAD & DEFLECTION TABLE

Bar Size	Symbol	Approx. Weight psf	Sec. Mod Per Ft. Of Width		SPAN (Direction of Bearing Bar) 24"	30"	36"	42"	48"	54"	60"	66"	72"	84"	96"
3" x 1/4"	19-H-4	27.8	3.789	U	12,632	8,084	5,614	4,125	3,158	2,495	2,021	1,670	1,404	1,031	789
	19-H-2	28.7		C	12,632	10,105	8,421	7,218	6,316	5,614	5,053	4,593	4,211	3,609	3,158
3" x 5/16"	19-H-4	34.5	4.737	U	15,789	10,105	7,018	5,156	3,947	3,119	2,526	2,088	1,754	1,289	987
	19-H-2	36.1		C	15,789	12,632	10,526	9,023	7,895	7,018	6,316	5,742	5,263	4,511	3,947
3" x 3/8"	19-H-4	41.1	5.684	U	18,947	12,126	8,421	6,187	4,737	3,743	3,032	2,505	2,105	1,547	1,184
	19-H-2	42.6		C	18,947	15,158	12,632	10,827	9,474	8,421	7,579	6,890	6,316	5,414	4,737
3-1/4" x 1/4"	19-H-4	29.8	4.447	U	14,825	9,488	6,589	4,841	3,706	2,928	2,372	1,960	1,647	1,210	927
	19-H-2	30.9		C	14,825	11,860	9,883	8,471	7,412	6,589	5,930	5,391	4,942	4,236	3,706
3-1/4" x 5/16"	19-H-4	37.3	5.559	U	18,531	11,860	8,236	6,051	4,633	3,660	2,965	2,450	2,059	1,513	1,158
	19-H-2	38.8		C	18,531	14,825	12,354	10,589	9,265	8,236	7,412	6,738	6,177	5,294	4,633
3-1/4" x 3/8"	19-H-4	44.4	6.671	U	22,237	14,232	9,883	7,261	5,559	4,392	3,558	2,940	2,471	1,815	1,390
	19-H-2	45.9		C	22,237	17,789	14,825	12,707	11,118	9,883	8,895	8,086	7,412	6,353	5,559
3-1/2" x 1/4"	19-H-4	31.9	5.158	U	17,193	11,004	7,641	5,614	4,298	3,396	2,751	2,273	1,910	1,404	1,075
	19-H-2	33.1		C	17,193	13,754	11,462	9,825	8,596	7,641	6,877	6,252	5,731	4,912	4,298
3-1/2" x 5/16"	19-H-4	40.0	6.447	U	21,491	13,754	9,552	7,018	5,373	4,245	3,439	2,842	2,388	1,754	1,343
	19-H-2	41.6		C	21,491	17,193	14,327	12,281	10,746	9,552	8,596	7,815	7,164	6,140	5,373
3-1/2" x 3/8"	19-H-4	47.6	7.737	U	25,789	16,505	11,462	8,421	6,447	5,094	4,126	3,410	2,865	2,105	1,612
	19-H-2	49.2		C	25,789	20,632	17,193	14,737	12,895	11,462	10,316	9,378	8,596	7,368	6,447
4" x 1/4"	19-H-4	36.4	6.737	U	22,456	14,372	9,981	7,333	5,614	4,436	3,593	2,969	2,495	1,833	1,404
	19-H-2	37.5		C	22,456	17,965	14,971	12,832	11,228	9,981	8,982	8,166	7,485	6,416	5,614
4" x 5/16"	19-H-4	45.3	8.421	U	28,070	17,965	12,476	9,166	7,018	5,545	4,491	3,712	3,119	2,291	1,754
	19-H-2	47.1		C	28,070	22,456	18,713	16,040	14,035	12,476	11,228	10,207	9,357	8,020	7,018
4" x 3/8"	19-H-4	54.2	10.105	U	33,684	21,558	14,971	10,999	8,421	6,654	5,389	4,454	3,743	2,750	2,105
	19-H-2	55.8		C	33,684	26,947	22,456	19,248	16,842	14,971	13,474	12,249	11,228	9,624	8,421
4-1/2" x 1/4"	19-H-4	40.8	8.526	U	28,421	18,189	12,632	9,280	7,105	5,614	4,547	3,758	3,158	2,320	1,776
	19-H-2	41.9		C	28,421	22,737	18,947	16,241	14,211	12,632	11,368	10,335	9,474	8,120	7,105
4-1/2" x 5/16"	19-H-4	51.0	10.658	U	35,526	22,737	15,789	11,600	8,882	7,018	5,684	4,698	3,947	2,900	2,220
	19-H-2	52.6		C	35,526	28,421	23,684	20,301	17,763	15,789	14,211	12,919	11,842	10,150	8,882
4-1/2" x 3/8"	19-H-4	60.8	12.789	U	42,632	27,284	18,947	13,921	10,658	8,421	6,821	5,637	4,737	3,480	2,664
	19-H-2	62.4		C	42,632	34,105	28,421	24,361	21,316	18,947	17,053	15,502	14,211	12,180	10,658
5" x 1/4"	19-H-4	45.2	10.526	U	35,088	22,456	15,595	11,457	8,772	6,931	5,614	4,640	3,899	2,864	2,193
	19-H-2	46.3		C	35,088	28,070	23,392	20,050	17,544	15,595	14,035	12,759	11,696	10,025	8,772
5" x 5/16"	19-H-4	56.5	13.158	U	43,860	28,070	19,493	14,322	10,965	8,664	7,018	5,800	4,873	3,580	2,741
	19-H-2	58.1		C	43,860	35,088	29,240	25,063	21,930	19,493	17,544	15,949	14,620	12,531	10,965
5" x 3/8"	19-H-4	67.4	15.789	U	52,632	33,684	23,392	17,186	13,158	10,396	8,421	6,960	5,848	4,296	3,289
	19-H-2	68.9		C	52,632	42,105	35,088	30,075	26,316	23,392	21,053	19,139	17,544	15,038	13,158
6" x 1/4"	19-H-4	54.0	15.158	U	50,526	32,337	22,456	16,498	12,632	9,981	8,084	6,681	5,614	4,125	3,158
	19-H-2	55.2		C	50,526	40,421	33,684	28,872	25,263	22,456	20,211	18,373	16,842	14,436	12,632
6" x 5/16"	19-H-4	67.5	18.947	U	63,158	40,421	28,070	20,623	15,789	12,476	10,105	8,351	7,018	5,156	3,947
	19-H-2	69.1		C	63,158	50,526	42,105	36,090	31,579	28,070	25,263	22,967	21,053	18,045	15,789
6" x 3/8"	19-H-4	80.9	22.737	U	75,789	48,505	33,684	24,748	18,947	14,971	12,126	10,022	8,421	6,187	4,737
	19-H-2	82.1		C	75,789	60,632	50,526	43,308	37,895	33,684	30,316	27,560	25,263	21,654	18,947

BAR GRATING TO BE HOT DIPPED GALVANIZED (HDG) AFTER FABRICATION - SEE STRUCTURAL NOTES SECTION "STEEL GRATING / SD1) - BJM

H-19 PANEL WIDTH (inches)

Note: H-Heavy Duty cross rods may extend 1/8" each side. Panel widths do not include these extensions.

No. of Bars	2	3	4	5	6	7	8	9	10	11	12	13	14	15	16	17	18	19	20
1/4" Bar	1 7/16	2 5/8	3 13/16	5	6 3/16	7 3/8	8 9/16	9 3/4	10 15/16	12 1/8	13 5/16	14 1/2	15 11/16	16 7/8	18 1/16	19 1/4	20 7/16	21 5/8	22 13/16
5/16" Bar	1 1/2	2 11/16	3 7/8	5 1/16	6 1/4	7 7/16	8 5/8	9 13/16	11	12 3/16	13 3/8	14 9/16	15 3/4	16 15/16	18 1/8	19 5/16	20 1/2	21 11/16	22 7/8
3/8" Bar	1 9/16	2 3/4	3 15/16	5 1/8	6 5/16	7 1/2	8 11/16	9 7/8	11 1/16	12 1/4	13 7/16	14 5/8	15 13/16	17	18 3/16	19 3/8	20 9/16	21 3/4	22 15/16

No. of Bars	21	22	23	24	25	26	27	28	29	30	31
1/4" Bar	24	25 3/16	26 3/8	27 9/16	28 3/4	29 15/16	31 1/8	32 5/16	33 1/2	34 11/16	35 7/8
5/16" Bar	24 1/16	25 1/4	26 7/16	27 5/8	28 13/16	30	31 3/16	32 3/8	33 9/16	34 3/4	35 15/16
3/8" Bar	24 1/8	25 5/16	26 1/2	27 11/16	28 7/8	30 1/16	31 1/4	32 7/16	33 5/8	34 13/16	36

All 1/4" Bar Size - up to 31 Bars Wide

~~1 x 5/16 thru 2-1/2 x 3/8 - up to 31 Bars Wide~~

2-3/4 x 5/16 thru 6 x 3/8 - up to 26 Bars Wide

Grating Fasteners, LLC
P.O. Box 6438
New Orleans, LA 70174

Home of “G-Clips”...the best grating fastener

G-Clip Top Plates and Saddle Dimensions

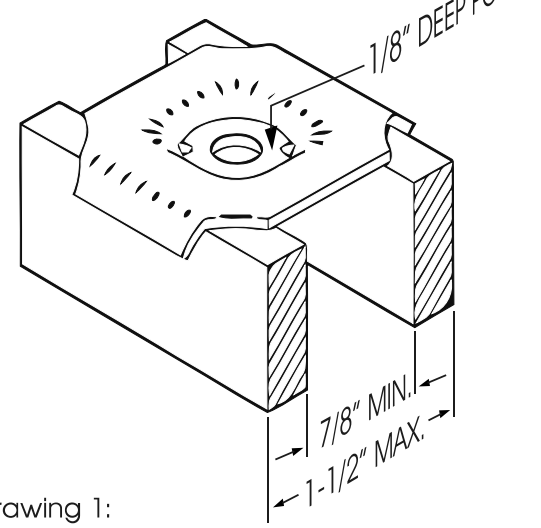

Drawing 1:
GT-W, galvanized carbon steel
or **SSGT-W**, 316 stainless steel
or **ALGT-W**, aluminum

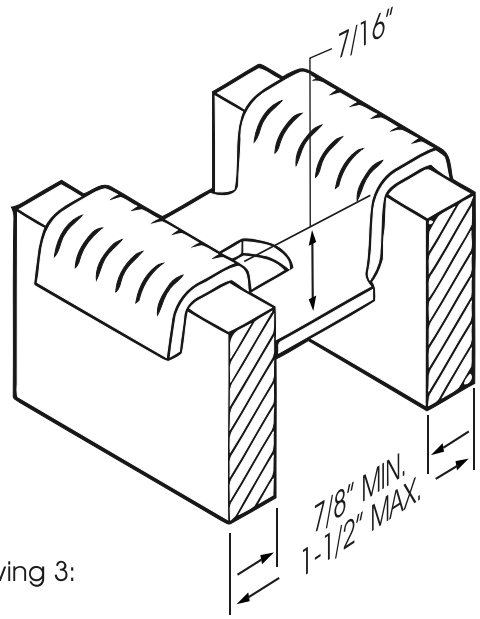

Drawing 3:
F-10
galvanized carbon steel or
stainless steel saddle clip

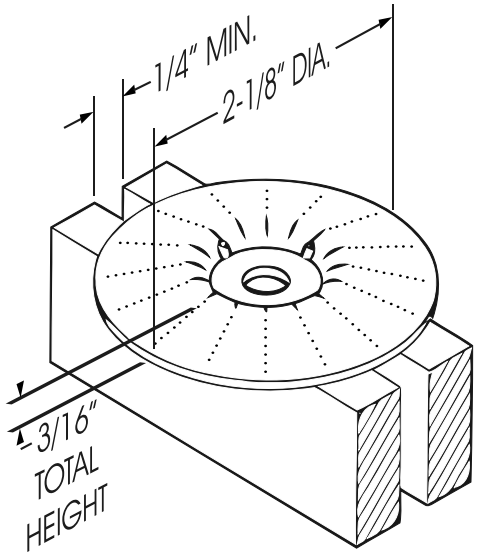

Drawing 2:
GT-R, galvanized carbon steel
~~or **SSGT-R**, 316 stainless steel~~

GALVANIZED
ROUND TOP WITH
PLATED 1/4X4 SELF
TAPPING TEKS WILL
BE PROVIDED

Phone (toll-free) 1-800-227-9013 (504) 361-3471 Fax (504) 362-9059
Internet: www.gclips.com e-mail to:sales@gclips.com