STRUCTURAL ANALYSIS REPORT

Prepared For: AT&T Mobility
16221 NE 72nd Way
Redmond, WA 98052

Project Owner: AT&T

Project Name: Carillon Point

Project Number: SB13

Project Address: 2000 Carillon Point
Kirkland, WA 98033

Site Coordinates: 47.6553
-122.2061

Prepared By: Glotel.

Ryan McDaniel, P.E.
March 8, 2016

EXPIRES 2017-01-31

PROJECT SCOPE:

AT&T Mobility proposes the following: Replace (3) existing panel antennas (one per sector) with (3) new panel antennas (one per sector). Install (3) new RRH units (one per sector), replace (3) distribution units (one per sector), and remove (6) TMA's (two per sector).

ANALYSIS:

The purpose of this analysis is to determine if the proposed installation is adequately supported under the proposed loadings and provide any recommendations for modification in order to bring the support structure into compliance if needed. The installation has been analyzed in accordance with the ASCE 7-10. The following parameters were used for lateral analysis:

Wind Speed:	110		
Wind Exposure:	D	Occupancy Category:	II
Topographic Factor, kzt:	1.0	Seismic Design Category:	D
Ground Snow Load:	20 psf	Mapped Parameter, Ss:	1.27
Frost Depth:	24 inches	Mapped Parameter, S1:	0.488

This Structural Analysis Report for the proposed AT&T equipment is inclusive of the entire equipment support structure (i.e. antenna/equipment mounting and support frames) and the existing building structures support system in the affected areas where the installations occur. This analysis is based on the specific assumptions and conditions as stated within the following report.

RESULTS:

Based on our review of the existing structure with the proposed loadings, we have determined the following:

Design Element	Status
Antenna Anchorage	Structurally Adequate / Designed per Code
Antenna Support	Structurally Adequate / Designed per Code

Please refer to Appendix A for structural calculations supporting the above results as well as the required modifications and conclusions sections below for additional comments.

CONTENTS:

1 - 3 Report
A Appendix A (Calculations)
B Appendix B (Referenced Documents)

1 Antenna Sector Equipment Inventory

Sector	Equipment Type	Owner	Current Status
alpha	(3) Panel Antennas	AT&T	(2) Exist., (1) Prop.
alpha	(2) Radiohead Units (RRH)	AT&T	(1) Exist., (1) Prop.
alpha	(1) Distribution Unit	AT&T	Proposed
alpha	(2) Amplifiers (TMA)	AT&T	Existing
beta	(4) Panel Antennas	AT&T	(3) Exist., (1) Prop.
beta	(2) Radiohead Units (RRH)	AT&T	(1) Exist., (1) Prop.
beta	(1) Distribution Unit	AT&T	Proposed
beta	(2) Amplifiers (TMA)	AT&T	Existing
gamma	(3) Panel Antennas	AT&T	(2) Exist., (1) Prop.
gamma	(2) Radiohead Units (RRH)	AT&T	(1) Exist., (1) Prop.
gamma	(1) Distribution Unit	AT&T	Proposed
gamma	(2) Amplifiers (TMA)	AT&T	Existing

Notes:
See the Architectural and Structural Drawings for configuration, location, and elevations. See the structural calculations for a detailed account of the equipment and the capacity of the support structure.

2 Cabinet Equipment Inventory

Sector	Equipment Type	Owner	Current Status
Shelter	GSM Cabinet	AT&T	Existing
Shelter	LTE Rack	AT&T	Existing
Shelter	Auxiliary Rack	AT&T	Existing
Shelter	UMTS Cabinet	AT&T	Existing
Shelter	Power Rack	AT&T	Existing
Shelter	Battery Rack	AT&T	Existing
Shelter	Battery Rack	AT&T	Existing

3 Materials

The following materials and specifications were assumed in the structural analysis.

Material	Specification	Notes
High Strength Bolts	ASTM A325	Specified
U-Bolts	ASTM A307	Specified
Steel Plate and Angles	ASTM A36	Specified

4 Reference Documents

The following data was used to model and analyze the structure.

Date	Document	Author
March 2, 2011	Structural Analysis	LDC Engineering
May 2011	2012 Seattle Building Code	Seattle Code Council
2010	ASCE 7-10	ASCE
March 8, 2016	Issued for 100% CD	Glotel

5 Design Comments

New panel antennas are to be mounted to existing 2" masts with 1/2" U-bolts. The existing hardware is checked for the loads applied by the new antennas and equipment. It is assumed that the existing mounting structure is in good condition with no damage that could cause a reduced capacity.

6 Conclusion

To the best of our knowledge and belief, the Antenna Anchorage and Antenna Support will be in compliance with the requirements of the specifications, codes and agencies having jurisdiction over the work.

7 Disclaimers

1. This report is meant to show the level of conformance for the site with the codes and guidelines adopted by the agency with jurisdiction over the site. No other assessment is implied.

2. This report is prepared with the information furnished to Glotel by our client. If the conditions of the site change, or if new information becomes available, the results of this report are not valid. Glotel should be notified so that the report can be updated and resubmitted.

3. Glotel is not responsible for the conclusions, opinions and recommendations made by others based on the information contained herein.

A Appendix – Structural Calculations

USGS Design Maps Summary Report

User–Specified Input

Building Code Reference Document	ASCE 7-10 Standard (which utilizes USGS hazard data available in 2008)
Site Coordinates	47.65528°N, 122.20611°W
Site Soil Classification	Site Class D – "Stiff Soil"
Risk Category	I/II/III

USGS–Provided Output

S_S =	1.270 g	S_{MS} =	1.270 g	S_{DS} =	0.847 g
S_1 =	0.488 g	S_{M1} =	0.738 g	S_{D1} =	0.492 g

For information on how the SS and S1 values above have been calculated from probabilistic (risk-targeted) and deterministic ground motions in the direction of maximum horizontal response, please return to the application and select the "2009 NEHRP" building code reference document.

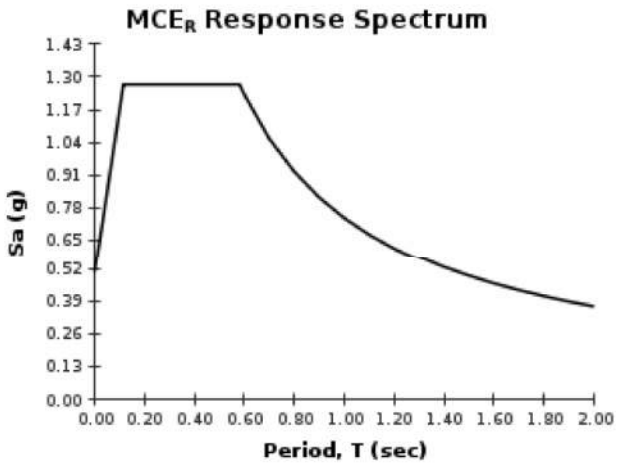

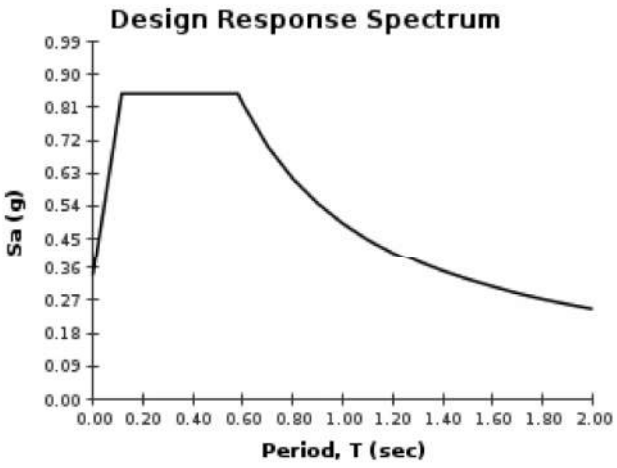

For PGA_M, T_L, C_{RS}, and C_{R1} values, please view the detailed report.

Although this information is a product of the U.S. Geological Survey, we provide no warranty, expressed or implied, as to the accuracy of the data contained therein. This tool is not a substitute for technical subject-matter knowledge.

Search Results

Query Date: Thu Mar 03 2016
Latitude: 47.6553
Longitude: -122.2061

ASCE 7-10 Windspeeds
(3-sec peak gust in mph*):

Risk Category I: 100
Risk Category II: 110
Risk Category III-IV: 115
MRI 10-Year:** 72
MRI 25-Year:** 79
MRI 50-Year:** 85
MRI 100-Year:** 91

ASCE 7-05 Windspeed:
85 (3-sec peak gust in mph)
ASCE 7-93 Windspeed:
70 (fastest mile in mph)

*Miles per hour
**Mean Recurrence Interval

Users should consult with local building officials to determine if there are community-specific wind speed requirements that govern.

Print your results

WINDSPEED WEBSITE DISCLAIMER

While the information presented on this website is believed to be correct, ATC and its sponsors and contributors assume no responsibility or liability for its accuracy. The material presented in the windspeed report should not be used or relied upon for any specific application without competent examination and verification of its accuracy, suitability and applicability by engineers or other licensed professionals. ATC does not intend that the use of this information replace the sound judgment of such competent professionals, having experience and knowledge in the field of practice, nor to substitute for the standard of care required of such professionals in interpreting and applying the results of the windspeed report provided by this website. Users of the information from this website assume all liability arising from such use. Use of the output of this website does not imply approval by the governing building code bodies responsible for building code approval and interpretation for the building site described by latitude/longitude location in the windspeed load report.

SITE PARAMETERS:

Risk Category =	II	(Table 1-1)	Latitude =	47.655277	(USGS)
Site Soil Classification =	D	(Table 20.3-1)	Longitude =	-122.206111	(USGS)

MAPPED ACCELERATION PARAMETERS:

Mapped Parameter, Ss =	1.27	(USGS)
Mapped Parameter, S_1 =	0.488	(USGS)

MAPPED SPECTRAL RESPONSE ACCELERATION PARAMETERS:

Site Coefficient, F_a =	1.00g	(Table 11.4-1)
Site Coefficient, F_v =	1.512g	(Table 11.4-2)
$S_{MS} = F_a S_S$ =	1.27g	(Eq 11.4-4)
$S_{M1} = F_v S_1$ =	0.738g	(Eq 11.4-1)

DESIGN SPECTRAL RESPONSE PARAMETERS:

$S_{DS} = ⅔ S_{MS}$ =	0.847g	(Eq 11.4-3)
$S_{D1} = ⅔ S_{M1}$ =	0.492g	(Eq 11.4-4)

SESIMIC DESIGN CATEGORY

Seismic Design Category =	D	(Tables 11.6-1 and 11.6-2)

DESCRIPTION: Site parameters are used to determine siesmic coefficiets for use with nonstructural components.

SEISMIC DESIGN FORCE FOR NONSTRUCTURAL COMPONENTS:

Importance Factor, I_e =	1.00	(Sec 13.1-3)	Average Structure Height, h =	**67.8**	ft
Response Mod. Factor, R_p =	**2.5**	(Table 13.5-1 or 13.6-1)	Height of Component, z =	**65.0**	ft
Amplification Factor, a_p =	1.0	(Table 13.6-1)			
$F_{p\,max}$ =	1.35	(Eqn 13.3-2)			
$F_{p\,min}$ =	0.254	(Eqn 13.3-3)			
Seismic Design Force, F_p =	0	(Eqn 13.3-1)			

Seismic Design Force, Fp = 0.395 (Eq 12.8-1)

Seismic Design Force, Fp = 0.277 (ASD)

DESCRIPTION: Site parameters are used to determine wind coefficients and resulting pressure for use with building appurtenances greater than 60 feet above grade level or stand alone equipment.

DESIGN DATA:

Wind Speed, V =	110	mph	(Figure 26.5-1)
Risk Category =	II		(Table 1.5-1)
Exposure Category =	D		(Section 26.7)
Topographic Factor, K_{zt} =	1.00		(Section 26.8 & Figure 26.8-1)
Directionality Factor, K_d =	0.85		(Table 26.6-1)
Height of Component, z =	65.0	ft	
Velocity Pressure Coeff., K_z =	1.33		(Table 27.3-1)
Gust Factor, G =	0.85		(Section 26.9)
C_f =	1.0		(non-directional)

DESIGN WIND LOADS FOR STRUCTURES OVER 60 FEET

$$q_z = 0.00256 \cdot K_z \cdot K_{zt} \cdot K_d \cdot V^2$$ (Eq 29.3-1)

velocity pressure, q_z =	34.9	psf	(Section 27.4.7 indicates 16 psf min. pressure)
Design Wind Pressure, P =	29.7	psf	(From Eq. 29.5-1, where F = P A_f)
Design Wind Pressure, P =	17.8	psf	(ASD)

DESCRIPTION: This worksheet evaluates the load applied to equipment. The diagram shown is generic. The actual equipment is fastened to a pipe with U-bolts. The pipe is mounted to a Tube Steel Girt. This sheet will check the bolt capacity for the worst case mount.

Connection Span = **8.00** ft
Connection Offset = **0.50** ft

Design Wind Pressure = 17.8 psf (ASD)
Fp = 0.277 W (ASD)
G = 0.9 (6.5.8.1)
S_{DS} = 0.8 g

							Wind		Seismic	
Item	Height in.	Width in.	Depth in.	Cf Face	Cf Side	Weight lbs.	Force Face lbs.	Force Side lbs.	Force Eh lbs.	Force Ev lbs.
SBJAH4-1D65C-DL	96	13.8	8.2	1.40	1.56	74	229	151	21	13
RRH4X25-WCS	31.5	12	8.7	1.33	1.34	70	62	45	19	12
Totals						144	291	197	40	24

Vector Resultant of Horiz. And Vert. Load = 325 lbs
(This load is used for loading to support beam)

Tension to Top Connection = 155 lbs
(Sum wind to face and weight about bottom connection)

Shear to Each Connection = 107 lbs
(Sum wind to side and wieght about bottom connection)

1/2" A307 bolts (Max. T = 4.417 kips, Max. V = 2.356 kips)

SUMMARY:

Anchor capacity > Applied Load

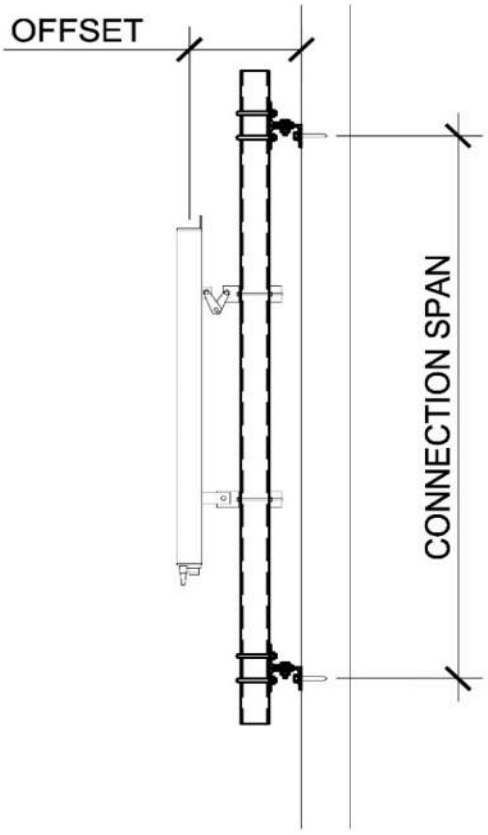

Generic Diagram

DESCRIPTION: Antenna Support Mast

BEAM AND LOADING ATTRIBUTES:

Beam Segments	
x End	EI
0	11,177
7.5	11,177
0	0
0	0

Supports
x
0
1
0
0
0

Point Loads		
x	lbs	Moment
2	-154.53	0
7.49999	-107.48	0
0	0	0
0	0	0
0	0	0

Distributed Loads			
x Start	x End	lbs	lbs
0.00	7.50	-5.93	-5.93
0.00	0.00	0.00	0.00
0.00	0.00	0.00	0.00
0.00	0.00	0.00	0.00
0.00	0.00	0.00	0.00
0.00	0.00	0.00	0.00
0.00	0.00	0.00	0.00
0.00	0.00	0.00	0.00

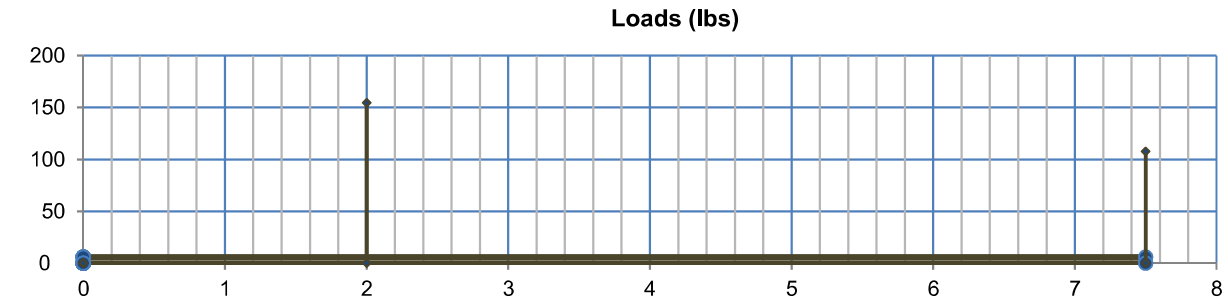

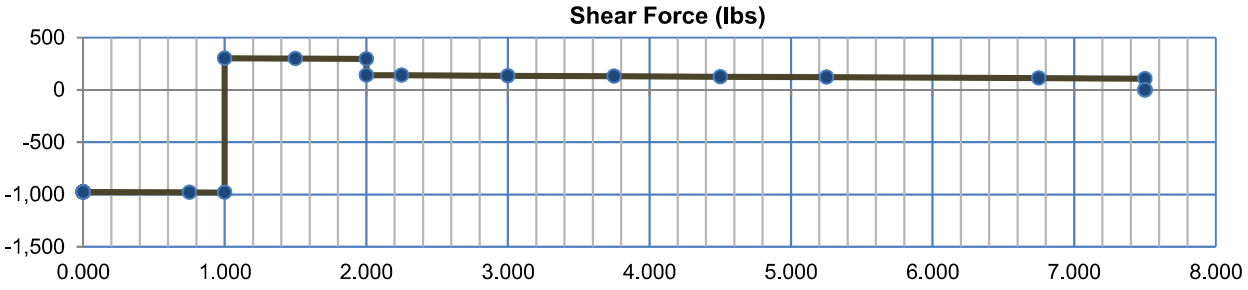

Max. = 981 lbs

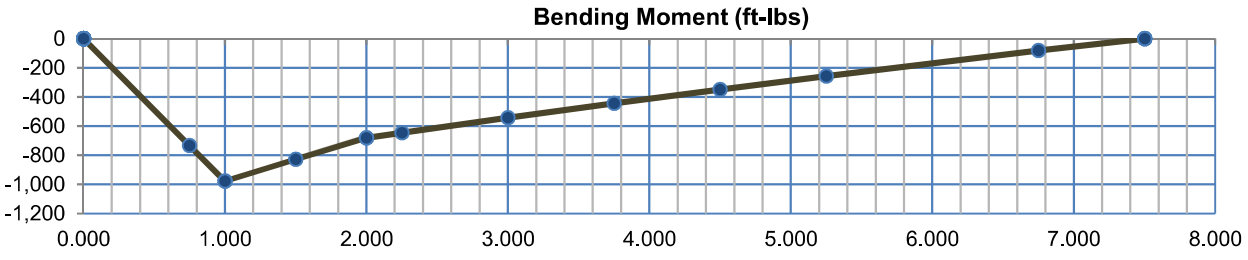

Max. = 978 ft-lbs

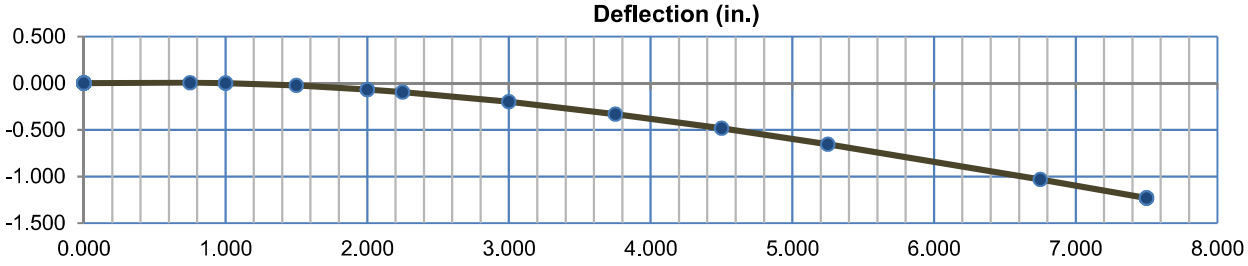

Max. = 1.2309 in.

DESCRIPTION: Antenna Support Mast

BEAM PROPERTIES: Beam shape = **P 2" Sch 40**

A =	1.070	in^2	Sx =	0.561	in^3
Weight =	3.650	plf	Sy =	0.561	in^3
			Ix =	0.666	in^4
			Iy =	0.666	in^4
			rx =	0.787	in.
			ry =	0.787	in.

MATERIAL PROPERTIES:

E =	29,000	ksi
F_y =	35,000	psi

BEAM LOADING:

Unsupported Length, L =	90	in.	
Moment, M =	0.978	kip-ft	
=	11,742	in-lbs	
Shear, V =	0.981	kips	
Deflection, Δ =	1.231	in.	
Span Length / Deflection =	73		

BEAM STRESS:

Bending stress, f_{bx} =	20,930	psi	
Allowable Bending , F_{bx} = 0.66 F_y =	21,000	psi	
Required S_x =	0.6	in^3	**O.K.**
Shear Stress fv =	917	psi	
Allowable Shear Stress = 0.6 Fy =	21,000	psi	**O.K.**
Required Area, A =	0.001	in^2	

B Appendix – Referenced Documents

LDC
THE CIVIL ENGINEERING GROUP

Commercial
Infrastructure
Residential

March 2, 2011

AT&T Mobility Corporation
c/o: Paul Long
Goodman Networks
8815 122nd Ave NE
Kirkland, WA 98033

RE: **Level 1 Structural Analysis**
SB13 Carillon Point
2000 Carillon Point
Kirkland, WA 98033

I. Introduction

At the request of Goodman Networks, we have performed a structural analysis of the existing antenna mounts at SB13 Carillon Point. The evaluation was completed in conformance with the 2009 IBC, the 2009 IEBC and the ASCE 7-05 under the following site specific conditions:

Basic Wind Speed: 85 mph
Exposure Category: D
Occupancy Category: II

Based on our visual inspection performed or December 14, 2010 the antenna mounts appear to be well maintained and free of corrosion. This evaluation assumes that the mounts were properly installed per the original design documents.

Previous structural analyses from CG engineering and TRK engineering dated August 5, 2002 and November 1, 2004 were reviewed as part of this analysis.

The following tables detail the existing and proposed antenna configurations in the areas subject to change.

II. Existing Antenna Configuration

Sector	Antenna Model	Antenna Weight	Effective Area
X	PowerWave 7263	16.5 lbs	3.76 sf
Y	Kathrein 739684	30.8 lbs	3.65 sf
Z	PowerWave 7263	16.5 lbs	3.76 sf

III. Proposed Antenna Configuration

Sector	Antenna Model	Antenna Weight	Effective Area
X	KMW AM-X-CD-16-65-00T-RET	48.5 lbs	5.90 sf
Y	PowerWave P65-17-XLH-RR	70 lbs	8.00 sf
Z	Kathrein 80010764	40.8 lbs	4.75 sf

14201 NE 200th Street, #100 • Woodinville, WA 98072 • ph: 425.806.1869 • fx: 425.482.2893 • www.LDCcorp.com

IV. Conclusion

The subject antenna mounts are structurally adequate to support the above stated loading in conformance with IBC Chapter 13. The evaluation compared the existing and proposed gravity and wind loading with the design capacity of the system. See the attached calculations for the detailed analysis. By inspection, the existing penthouse wall is also structurally adequate to support the proposed loading

Please contact the undersigned with any questions relating to this work.

LDC, Inc.

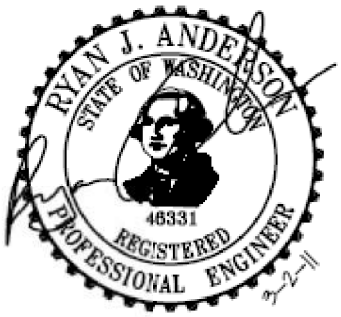

Ryan Anderson, P.E.

SB13 Carillon Point
Antenna Replacement

Proj: 10-601
3/1/11
DRD

Controlling Codes

International Existing Building Code (IEBC) 2009

International Building Code (IBC) 2009

ASCE 7-05

AISC 13

This project consists of the replacement of three existing RF antennas with new antennas of a similar size and shape. The existing antenna mounts are to be used for the new antennas.

Per IEBC Section 403.1 this is a Level 1 alteration

Per IEBC Section 606.2 additional dead loads need not comply with IBC if the increase does not exceed 1.05 times the original dead load.

By inspection all new antennas exceed the weight of the original antennas by more than 5%. Therefor check per IBC

SBI3 Carillon Point
Antenna Replacement

proj 10-601
3/1/11
DAO

Antenna Mount Check

Worst Case is Sector Y position 13 where an Kathrein model 739684 is replaced by a Powerwave model P65-17-XLH-RR_ 7/6 lite

Kathrein: b = 10.3" h = 51" t = 4" w = 30.8 lb

PowerWave: b = 12" h = 96" t = 6" w = 70 #

Building Dimensions:

h = 67'-7" (Top of Mech Penthouse)
h_h = 53' (Building Roof)

Width = 165' ±
Length = 220' ±
X, Y, Z = Sectors

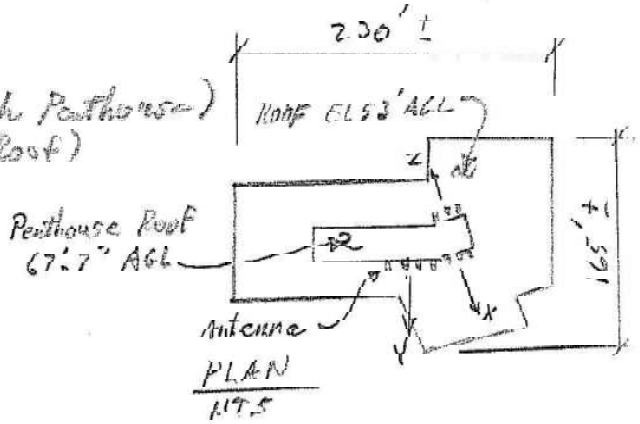

Wind Load

Building is near beach on Lake Washington w/ 1/4 mile fetch

∴ Roughness Category D per ASCE 7-05 Section 6.5.6.2.

∴ Exposure D per ASCE 7-05 Section 6.5.6.3

Basic Wind Speed, V = 85 mph (3 sec. gust)

By inspection K_{zt} = 1.0

Occupancy Category II (ASCE 7-05 Table 1-1)

I_w = 1.0 (ASCE 7-05 Table 6-1)

SB13 Carillon Point
Antenna Mount Wind Analysis
Wind Normal to Long Face of Building (North-South Wind)

Job No. 10-601
Date 3/1/2011
By DAO

Gust Factor Calculation per ASCE 07-05 Section 6.5.8

Building Properties, Exposure Category and Basic Wind Speed

B =	230.00	ft	Width Normal to Wind
L =	165.00	ft	Length Parallel to Wind
h =	53.00	ft	Height to Top of Building
β =	5.00	% damping	Structural Damping
C_t =	0.020		(ASCE 7-05 Table 12.8-2)
x =	0.75		(ASCE 7-05 Table 12.8-2)
Exposure =	D		(ASCE 7-05 6.5.6.3)
V =	85.00	mph Basic Wind Speed (3 Second Gust)	(ASCE 7-05 Figure 6-1)

Derived Quantities

Table 6-2 Values Based on Exposure Category

c =	0.15	(ASCE 7-05 Table 6-2)
b_{bar} =	0.80	(ASCE 7-05 Table 6-2)
alphabar =	0.11	(ASCE 7-05 Table 6-2)
Z_{min} =	7.00 ft	(ASCE 7-05 Table 6-2)
l =	650.00	(ASCE 7-05 Table 6-2)
epsilon =	0.13	(ASCE 7-05 Table 6-2)
Z_{bar} =	31.80	(ASCE 7-05 Table 6-2)
g_Q =	3.40	(ASCE 7-05 6.5.8.2)
g_v =	3.40	(ASCE 7-05 6.5.8.2)

$I_{zbar} = c(33/z_{bar})^{(1/6)}$ (ASCE 7-05 Eqn 6-5)

I_{zbar} = 0.16

$Q = sqrt(1/(1+0.63((B+h)/L_{zbar})^{0.63})$ (ASCE 7-05 Eqn 6-6)

Q = 0.8531

$L_{zbar} = l(z_{bar}/33)^{epsilon}$ (ASCE 7-05 Eqn 6-7)

L_{zbar} = 647.00

$T_a = C_t h^x$ = 0.39 Sec (ASCE 7-05 Eqn 12.8-7)

$n_1 = 1/T_a$ = 2.55 Hz (ASCE 7-05 6.3)

n1 >= 1 therefore Building is Rigid (ASCE 7-05 6.2)

SB13 Carillon Point Job No. 10-601
Antenna Mount Wind Analysis Date 3/1/2011
Wind Normal to Long Face of Building (North-South Wind) By DAO

Gust Factor Calculation per ASCE 07-05 Section 6.5.8, continued

Derived Quantities, continued

g_R = sqrt(2ln(3600n1)) + 0.577/sqrt(2ln(3600n1)) (ASCE 7-05 Eqn 6-9)
g_R = N/A - Building is Rigid

$V_{barzbar} = V(88/60)b_{bar}(z_{bar}/33)^{(alpha bar)}$ (ASCE 7-05 Eqn 6-14)
$V_{barzbar}$ = N/A - Building is Rigid

$R_l = 1/eta - (1/2eta^2)(1-e^{(-2eta)})$ for eta >0 (ASCE 7-05 Eqn 6-13a)
$R_l = 1$ for eta = 0 (ASCE 7-05 Eqn 6-13b)

$R_h = R_l$ where eta = $4.6n1*h/V_{barzbar}$
eta = N/A - Building is Rigid
R_h = N/A - Building is Rigid

$R_B = R_l$ where eta = $4.6n_1*B/V_{barzbar}$
eta = N/A - Building is Rigid
R_B = N/A - Building is Rigid

$R_L = Rl$ where eta = 15.4n1*L/Vbarzbar
eta = N/A - Building is Rigid
R_L = N/A - Building is Rigid

$N_1 = n_1*L_{zbar}/V_{barzbar}$ (ASCE 7-05 Eqn 6-12)
N_1 = N/A - Building is Rigid

$R_n = 7.47N_1/(1+10.3N_1)^{(5/3)}$ (ASCE 7-05 Eqn 6-11)
R_n = N/A - Building is Rigid

$R = sqrt((1/\beta)R_nR_hR_B(0.53+0.47R_L))$ (ASCE 7-05 Eqn 6-10)
R = N/A - Building is Rigid

Gust Factor

Gf = 0.925((1+1.7gQIzbar*Q)/(1+1.7gv*Izbar)) (ASCE 7-05 Eqn 6-4)
Gf = 0.862
Use G = 0.85 per ASCE 7-05 6.5.8.1

SB13 Carillon Point
Antenna Mount Wind Analysis
Wind Normal to Short Face of Building (East-West Wind)

Job No. 10-601
Date 3/1/2011
By DAO

Gust Factor Calculation per ASCE 07-05 Section 6.5.8

Building Properties, Exposure Category and Basic Wind Speed

B =	165.00	ft	Width Normal to Wind
L =	230.00	ft	Length Parallel to Wind
h =	53.00	ft	Height to Top of Building
β =	5.00	% damping	Structural Damping
C_t =	0.020		(ASCE 7-05 Table 12.8-2)
x =	0.75		(ASCE 7-05 Table 12.8-2)
Exposure =	D		(ASCE 7-05 6.5.6.3)
V =	85.00	mph Basic Wind Speed (3 Second Gust)	(ASCE 7-05 Figure 6-1)

Derived Quantities

Table 6-2 Values Based on Exposure Category

c =	0.15	(ASCE 7-05 Table 6-2)
b_{bar} =	0.80	(ASCE 7-05 Table 6-2)
alphabar =	0.11	(ASCE 7-05 Table 6-2)
Z_{min} =	7.00 ft	(ASCE 7-05 Table 6-2)
l =	650.00	(ASCE 7-05 Table 6-2)
epsilon =	0.13	(ASCE 7-05 Table 6-2)
Z_{bar} =	31.80	(ASCE 7-05 Table 6-2)
g_Q =	3.40	(ASCE 7-05 6.5.8.2)
g_v =	3.40	(ASCE 7-05 6.5.8.2)

$I_{zbar} = c(33/z_{bar})^{(1/6)}$ (ASCE 7-05 Eqn 6-5)

I_{zbar} = 0.15

$Q = sqrt(1/(1+0.63((B+h)/L_{zbar})^{0.63})$ (ASCE 7-05 Eqn 6-6)

Q = 0.8712

$L_{zbar} = l(z_{bar}/33)^{epsilon}$ (ASCE 7-05 Eqn 6-7)

L_{zbar} = 647.00

$T_a = C_t h^x$ = 0.39 Sec (ASCE 7-05 Eqn 12.8-7)

$n_1 = 1/T_a$ = 2.55 Hz (ASCE 7-05 6.3)

n1 >= 1 therefore Building is Rigid (ASCE 7-05 6.2)

SB13 Carillon Point Job No. 10-601
Antenna Mount Wind Analysis Date 3/1/2011
Wind Normal to Short Face of Building (East-West Wind) By DAO

Gust Factor Calculation per ASCE 07-05 Section 6.5.8, continued

Derived Quantities, continued

$g_R = \sqrt{2\ln(3600n1)} + 0.577/\sqrt{2\ln(3600n1)}$ (ASCE 7-05 Eqn 6-9)
g_R = N/A - Building is Rigid

$V_{barzbar} = V(88/60)b_{bar}(z_{bar}/33)^{(alpha/bar)}$ (ASCE 7-05 Eqn 6-14)
$V_{barzbar}$ = N/A - Building is Rigid

$R_l = 1/eta - (1/2eta^2)(1-e^{(-2eta)})$ for eta >0 (ASCE 7-05 Eqn 6-13a)
$R_l = 1$ for eta = 0 (ASCE 7-05 Eqn 6-13b)

$R_h = R_l$ where eta = $4.6n1*h/V_{barzbar}$
eta = N/A - Building is Rigid
R_h = N/A - Building is Rigid

$R_B = R_l$ where eta = $4.6n_1*B/V_{barzbar}$
eta = N/A - Building is Rigid
R_B = N/A - Building is Rigid

$R_L = Rl$ where eta = 15.4n1*L/Vbarzbar
eta = N/A - Building is Rigid
R_l = N/A - Building is Rigid

$N_1 = n_1*L_{zbar}/V_{barzbar}$ (ASCE 7-05 Eqn 6-12)
N_1 = N/A - Building is Rigid

$R_n = 7.47N_1/(1+10.3N_1)^{(5/3)}$ (ASCE 7-05 Eqn 6-11)
R_n = N/A - Building is Rigid

$R = \sqrt{(1/\beta)R_nR_hR_B(0.53+0.47R_L)}$ (ASCE 7-05 Eqn 6-10)
R = N/A - Building is Rigid

Gust Factor

$Gf = 0.925((1+1.7gQIzbar*Q)/(1+1.7gv*Izbar))$ (ASCE 7-05 Eqn 6-4)
Gf = 0.870
Use G = 0.85 per ASCE 7-05 6.5.8.1

SB13 Carillon Point Job No.

Antenna Mount Wind Analysis Date 3/1/2011

Wind Normal to Long Side of Building (N-S Wind) By DAO

Wind Pressure Per ASCE 7-05 Chapter 6

V =	85	mph	Basic Wind Speed (3 second gust)
Reduction	0	%	(from ASCE 37-02 6.2.1)
Case =	1		(from ASCE 7-05 Table 6-3)
Exposure=	D		(from ASCE 7-05 Section 6.5.6.3)
K_d =	0.850		(Directionality Factor from ASCE 7-05 Table 6-4)
K_{zt} =	1.000		(Topographic Factor from ASCE 7-05 Section 6.5.7)
I_w =	1.000		(Importance Factor from ASCE 7-05 Table 6-1)
G =	0.850		(Gust Factor from ASCE 7-05 Section 6.5.8)
C_f =	2.000		(Drag Factor from ASCE 7-05 Figure 6-20, 6-21, 6-22or 6-23)
Δ_h =	6.08	ft	Height Increment for Pressure Calculation
Cf_2 =			(Rooftop Equipt. Increase per ASCE 7-05 Section 6.5.15.1)
V' =	85.00	mph	(from ASCE 7-05 Figure 6-1)

Calculated Values

G^*C_f = 1.7

q = 26.73 psf (from ASCE 7-05 6.5.10: $q = 0.00256^*K_d^*K_{zt}^*G^*C_f^*V^2{}^*I_w$)

alpha = 11.50 (from ASCE 7-05 Table 6-2)

z_g = 700.00 (from ASCE 7-05 Table 6-2)

($q_z = q^*K_z$ with K_z per ASCE 7-05 Table 6-3, Note 2)

A = Area at height z

Pressures and Forces at Z feet Above Grade						
z (ft)	K_z	q_z (psf)	A (ft^2)	F (#'s)	F(kips)	
15.00	1.03	16.20	1.00	28	0.03	
21.08	1.09	17.18	1.00	29	0.03	
27.15	1.14	17.96	1.00	31	0.03	
33.23	1.18	18.60	1.00	32	0.03	
39.30	1.22	19.15	1.00	33	0.03	
45.38	1.25	19.64	1.00	33	0.03	
51.45	1.28	20.07	1.00	34	0.03	
57.53	1.30	20.46	1.00	35	0.03	
63.60	1.32	20.82	1.00	35	0.04	
63.60	1.32	20.82	1.00	35	0.04	(High Point of Interest)
			Total =	325	0.32	

SB 13 Carillon Point
Antenna Replacement

proj 10-601
3/1/11
DAO

Wind Loads, cont

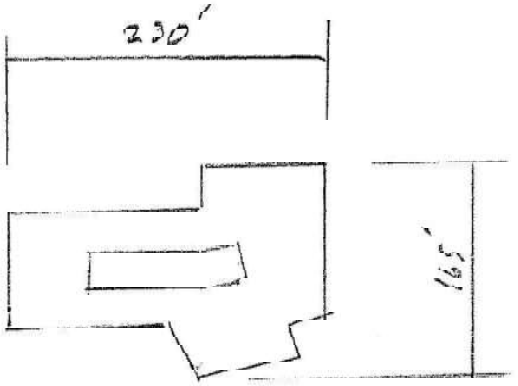

$G = 0.85$ (ASCE 7-05 6.5.8.1)

$K_d = 0.85$ (ASCE 7-05 Table 6-4)

$\frac{h}{D} = \frac{96}{12} = 8$ for Antenna

$\therefore C_f = 2.0$ (ASCE 7-05 Fig 6-21)

$q = .00256\, K_d\, K_{ze} \times G \times C_f \times V^2 \times I_w$

$q = .00256 \times .85 \times 1 \times .85 \times 2 \times 85^2 \times 1$

$q = 26.73$ psf

$\therefore$ @ $h = 63.6$ (℄ of 8' long antenna = 67.583 − 4 = 63.583)

$w = 35$ psf Note: Neglect ASCE 6.5.15.1 because antennas are shielded by penthouse and wind is already increased by factor of 2 per Figure 6-21 which is conservative.

Wind Force Parallel to Penthouse

$F_w = w \times A = 35 \times 1 \times 8 = 280$ #

Assume Hilti HIT-HY20 mounting bolts $\frac{1}{2}$" ϕ

Brick Veneer is 4" thick

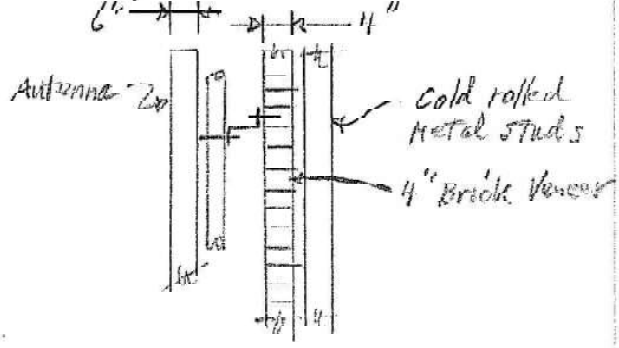

$\therefore$ Bolt Capacity is:

$T_A = 775$ #

$V_A = 1375$ #

SB13 Carillon Point
Antenna Replacement

proj 10-601
3/1/11
DAO

Wind Load, cont'

Wind Parallel to Penthouse, cont'

$F_w = \frac{6}{12} \times 8 \times 35 = 140\ \#$

for 2 anchors, one each top & bottom

$V = 140/2 = 70\ \#/\text{anchor}$

Mounted to 2"ϕ Std. Pipe existing mount:

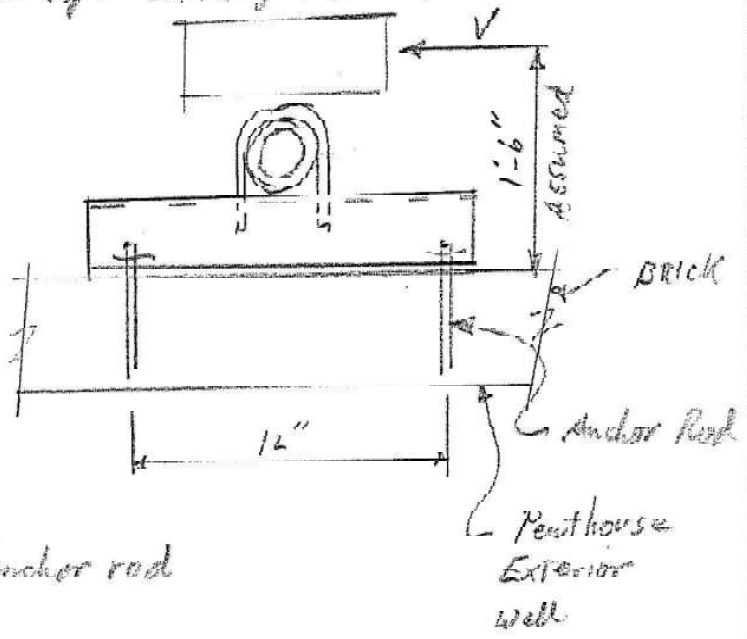

$\therefore t = \frac{18V}{12} = 1.5 \times 70$

$t = 105\ \#$

$S.F._t = \frac{775}{105}$

$S.F._t = 7.4$ ok

$v = \frac{70}{2} = 35\ \#/\text{anchor rod}$

$\therefore S.F._v = \frac{1375}{35}$

$S.F._v = 39.3$ ok

Note: By inspection wind normal to Penthouse wall is ok because anchors cannot see tension because antenna is shielded by wall.

SB 13 Carillon Point
Antenna Replacement

Proj 10-601
3/1/11
DAO

Seismic

Site Class D

Latitude : 47° 39' 22.5" N (47.656250° N)

Longitude : 122° 12' 24.36" W (122.206767° W)

$\therefore S_s = 1.266$ from USGS Seismic Hazard App

$S_1 = 0.429$

$I_p = 1$ (ASCE 13.1.3)

$R_p = 2.5$ (ASCE Table 13.6-1)

$a_p = 1.0$ (ASCE Table 13.6-1)

Seismic force

$$F_p = \frac{0.4\, a_p\, S_{DS}\, W_p}{\left(\frac{R_p}{I_p}\right)}\left(1 + 2\frac{z}{h}\right) \qquad z = 63.6' \quad h = 53'$$

$\frac{z}{h} = \frac{67.6}{53} = 1.29 \Rightarrow 1.0$ per ASCE 13.3.1

$S_{DS} = \frac{2}{3} F_a S_s$ where $F_a = 1.0$ (ASCE Table 11.4-1)

$S_{DS} = 2 \times 1.266/3 = 0.844 > 0.5$

$\therefore$ Seismic Design Category D (ASCE Table 11.6-1)

$$F_p = \frac{.4 \times 1 \times .844\ W_p}{\left(\frac{2.5}{1}\right)}(1+2\times1) = 0.405\ W_p > .35 S_{DS} I_p W_p \quad \text{ok}$$

$$\frac{1.3 R_p F_p}{1.6} = \frac{1.3 \times 2.5 \times .405}{1.5} \times 72 = 30.7\ \#/\text{anchor} \quad \text{(ASCE 13.4.2)}$$

By inspection this load is less than wind load, and anchors can easily carry it in tension. Say ok

SB 13 Carillon Point
Antenna Replacement

proj 10-601
3/1/11
DAO

Gravity Loads

Worst Case Load is 70 # (Sector 4)

$W = \frac{\Sigma P}{2}$ = 35 #/anchor

$W_{seismic} = .2 S_{DS} W_p$ (ASCE 12.14.3.1.2 Conservative)

$W_s = .2 \times .844 \times 70/2 = 5.9$ #/anchor

Total W = 78.3 #

∴ W = 39.2 #/anchor

By inspection gravity loads do not control.

SB13 Carillon Point

(Project #: 10-601)
Date: 3/1/2011
By: DAO

Antenna Replacement
Gravity Load plus Vertical Seismic

ASCE 7-05 2.4.1 Basic Load Combinations (ASD)

Loads	
D =	70.00
Di =	0.00
Qe =	0.00
F =	0.00
Fa =	0.00
H =	0.00
L =	0.00
Lr =	0.00
R =	0.00
S =	0.00
T =	0.00
W =	0.00
Wi =	0.00
Sds =	0.844
W0 =	1.000

Section 2.4.1	
1. D + F	70.00
2. D + H + F + L + T	70.00
3. D + H + F + (Lr or S or R)	70.00
4. D + H + F + 0.75(L + T) + 0.75(Lr or S or R)	70.00
5a. D + H + F + W	70.00
5b. (1 + 0.14*Sds)D + H + F + 0.7*W0*Qe	78.27 <--- controls
6a. D + H + F + 0.75W + 0.75L + 0.75(LR or S or R)	70.00
6b. (1+.105*Sds)D + H + F +.525*W0*Qe) + 0.75(L + LR)	76.20
6c. (1+.105*Sds)D + H + F +.525*W0*Qe) + 0.75(L + S)	76.20
6d. (1+.105*Sds)D + H + F +.525*W0*Qe) + 0.75(L + R)	76.20
7. 0.6D + W + H	42.00
8. (0.6 - 0.14*Sds)D - 0.7*W0*Qe + H	33.73

Section 2.4.2 - Including Flood Loads	
V-Zones or Coastal A-Zones	
1. D + H + F + W + 1.5Fa	N/A
2. D + H + F + 0.75W + 0.75L + 0.75(Lr or S or R) + 1.5Fa	N/A
3. 0.6D - W + H + 1.5Fa	N/A
Noncoastal A-Zones	
1. D + H + F + W + 0.75Fa	N/A
2. D + H + F + 0.75W + 0.75L + 0.75(Lr or S or R) + 0.75Fa	N/A
3. 0.6D - W + H + 0.75Fa	N/A

Section 2.4.3 - Including Atmospheric Ice Loads	
2. D + H + F + L + T + 0.7Di	N/A
3. D + H + F + 0.7Di + 0.7Wi + S	N/A
7. 0.6D + H + 0.7Di + 0.7Wi	N/A

D = dead load
Di = weight of ice
F_h, or Q_e = earthquake load (must NOT be divided by 1.4 prior to use in these load combinations)
F = load due to fluids with well defined pressures and maximum heights
Fa = flood load
H = load due to lateral earth pressure, ground water pressure, or pressure of bulk materials
L = live load
Lr = roof live load
R = rain load
S = snow load
T = self-straining force
W = wind load
Wi = wind-on-ice determined in accordance with ASCE 7-05 Section 10
Sds = design short period spectral accelleration
W_0 = either the Overstrength Factor (Omega 0), or the Redundancy Factor (Rho)

Appendix

P65-17-XLH-RR | Dual Broadband Antennas

POLARIZATION: Dual linear ±45°
FREQUENCY (MHz): 698-894, 1710-2170
HORIZONTAL BEAM WIDTH (°): 65, 65
GAIN (dBi/dBd): 17.2/15.1 17.5/15.4
TILT: 0-0, 0-10
LENGTH: 96"

ELECTRICAL SPECIFICATIONS*

Frequency range (MHz)	698-894		1710-2170		
Frequency band (MHz)	698-806	806-894	1710-1880	1850-1990	1990-2170
Gain (dBi/dBd)	16.4/14.3	17.2/15.1	16.9/14.8	17.2/15.1	17.5/15.4
Polarization	Dual Linear +/- 45		Dual Linear +/- 45		
Nominal Impedance (Ω)	50		50		
VSWR	< 1.5:1		< 1.5:1		
Horizontal beam width, -3 dB (°)	70	63	60	63	60
Vertical beam width, -3 dB (°)	8.4		6.5		
Electrical down tilt (°)	0 to 6		0 to 10		
Side lobe suppression, vertical 1st upper (dB)	> 16		> 16		
Isolation between inputs (dB)	> 30		> 30		
Inter band isolation (dB)	> 40				
Tracking, horizontal plane ±60° (dB)	< 2		< 2		
Vertical beam squint (°)	< 0.5		< 0.5		
Front to back ratio (dB) 180°±30° copolar	> 25		> 30		
Front to back ratio (dB) 180°±30° total power	> 22		> 25		
Cross polar discrimination (XPD) 0° (dB)	> 15		> 15		
Cross polar discrimination (XPD) +60° (dB)	10		10		
IM3, 2x1x@43dBm (dBc)	< -153		< -153		
Power handling, average per input (W)	500		300		
Power handling, average total (W)	1000		600		

MECHANICAL SPECIFICATIONS*

Connector	4 X 7/16 DIN Female
Connector position	Bottom
Dimensions, HxWxD, in (mm)	96" x 12" x 6" (2438 x 305 x 152)
Mounting	Pre-mounted Tilt Brackets
Weight, with brackets, lbs (kg)	70 (32)
Weight, without brackets, lbs (kg)	60 (27)
Wind load, frontal/lateral/rear side 42 m/s Cd=1.0 (N)	1040
Maximum operational wind speed, mph (m/s)	100 (45)
Survival wind speed, mph (m/s)	150 (67)
Lightning protection	DC Ground
Operating Temperature	
Radome material	PVC
Packet size, HxWxD, in (mm)	107" x 16" x 10" (2725 x 400 x 255)
Radome colour	Light Grey
Shipping weight, lbs (kg)	81 (37)
RET	iRET AISGv1.1, MET and AISGv2.0 Available
Brackets	7256.00, 7454.00

*All specifications subject to change without notice. Please contact your Powerwave representative for complete performance data.

ANTENNA PATTERNS*

For detailed patterns visit http://www.powerwave.com/rpa/.

© Copyright 2011 Powerwave Technologies, Inc. All rights reserved.
All specifications are subject to change without notice. Please contact your Powerwave representative for complete performance data.

4.2.8 HIT-HY 20 for Masonry Anchoring System

HIT HY 20 Allowable Loads for Threaded HIT-A Rods in Hollow Concrete Block, Lightweight Concrete Block, Brick with Holes, Clay Tile[1, 2]

Anchor Type	Anchor Diameter in. (mm)	HIT-A Short 2" (51mm) Embedment		HIT-A Standard 3-3/8" (86mm) Embedment			
		L/W or N/W Hollow Concrete Block		Brick with Holes		Clay Tile	
		Tension lb (kN)	Shear lb (kN)	Tension lb (kN)	Shear lb (kN)	Tension lb (kN)	Shear lb (kN)
HIT-A Rod Anchor	1/4[3] (6.4)[3]	265 (1.1)	340 (1.5)	365 (1.6)	305 (1.4)	130 (0.6)	100 (0.4)
	5/16 (7.9)	370 (1.6)	505 (2.2)	565 (2.5)	530 (2.4)	150 (0.7)	220 (1.0)
	3/8 (9.5)	525 (2.3)	790 (3.5)	775 (3.4)	930 (4.1)	150 (0.7)	220 (1.0)
	1/2 (12.7)	525 (2.3)	1230 (5.5)	775 (3.4)	1375 (6.1)	150 (0.7)	500 (2.2)

1 Based on using a safety factor of 6 for tension and 4 for shear.

2 Due to wide strength variations encountered in masonry, these values should be considered as guide values.

3 1/4" anchor diameter installed at 2" embedment in brick with holes and clay tile.

HIT HY 20 Allowable Loads for Threaded HIT-I Inserts in Hollow Concrete Block, Lightweight Concrete Block, Brick with Holes, Clay Tile[1, 2]

Anchor Type	Anchor Diameter in. (mm)	HIT Short 2" (51mm) Embedment		HIT Standard 3-3/8" (86mm) Embedment			
		L/W or N/W Hollow Concrete Block		Brick with Holes		Clay Tile	
		Tension lb (kN)	Shear lb (kN)	Tension lb (kN)	Shear lb (kN)	Tension lb (kN)	Shear lb (kN)
HIT-I Insert Anchor	No 14 screw w/ insert[3] (6.4)	240 (1.1)	510 (2.3)	300 (1.3)	530 (2.4)	85 (0.4)	150 (0.7)
	5/16 (7.9)	400 (1.8)	780 (3.5)	585 (2.6)	750 (3.3)	175 (0.8)	220 (1.0)
	3/8 (9.5)	400 (1.8)	1425 (6.3)	1150 (5.2)	1380 (6.1)	186 (0.8)	436 (1.9)
	1/2 (12.7)	400 (1.8)	1800 (8.0)	1160 (5.2)	1635 (7.3)	185 (0.8)	500 (2.2)

1 Based on using a safety factor of 6 for tension and 4 for shear.

2 Due to wide strength variations encountered in masonry, these values should be considered as guide values.

3 1/4" anchor installed at 2" embedment in brick with holes and clay tile.

Anchor Spacing and Edge Distance Guidelines

Brick with Holes & Multi-Wythe Brick Walls

Spacing:

$s_{cr} = s_{min}$ – Two (2) complete bricks in any direction

Edge Distance:

$c_{cr} = c_{min}$ – Two (2) complete bricks, or 16" (406 mm) in any direction (whichever is less.)

Clay Tile

Spacing:

$s_{cr} = s_{min}$ – One (1) anchor per tile cell

Edge Distance:

$c_{cr} = c_{min}$ – 12" (305 mm) from free edge

Hollow, Normal Weight & Lightweight Concrete Block

Spacing:

$s_{cr} = s_{min}$ – One (1) anchor per block cell

Edge Distance:

$c_{cr} = c_{min}$ – 12" (305 mm) min. from free edge

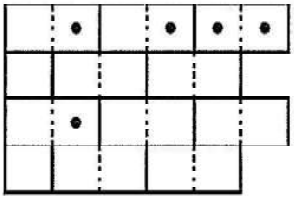

Wall Elevation

Cantilever Wall Mount Bracket

The Cantilever Wall Mount Bracket provides a secure, low profile support for wireless antennas in wall-mounting applications. The design of the Cantilever Wall Mount Bracket keeps the antenna close to the supporting wall, minimizing the visual impact of the antenna installation. This versatile mount accepts standard 2-3/8" (60.3mm) OD mounting pipe, which must be purchased separately in an appropriate length to suit the exact antenna size and application requirements. Each kit includes two wall brackets and all necessary hardware for installation on hollow or solid walls. The Cantilever Wall Mount Bracket is hot-dip galvanized to ensure long-term performance in all environmental conditions.

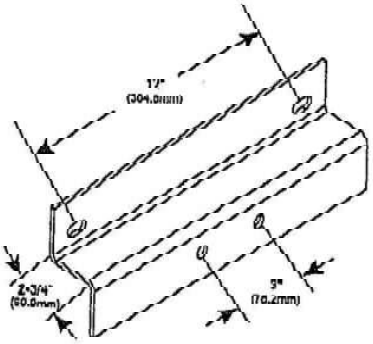

App.: Rooftops
Size: 14 1/2" (368.3mm) wide
Design: Z-shaped wall brackets
Feature: Low profile design

Mounts to: Solid or hollow walls
Material: Hot dip galv. steel
Incl.: Two brackets, 16 bolts, wall mt hardware
Order Sep.: 2 3/8" (60.3mm) OD pipe

Part #	Description	Price US$ Kit Qty.	Wt. lbs (Wt. kg)
MT-250	Cantilever Wall Mount Bracket. Order 2 3/8" (60.3mm) OD pipe separately.	75.00 Kit of 2	13.0 (6.0)

Low Profile Wall Mount

The design of the Low Profile Wall Mount allows wireless antennas to be mounted to a building wall while remaining virtually transparent from ground level. Adjustable pipe clamps included with each mount will accommodate pipe up to 2-3/8" (60.3mm) OD making this design an ideal solution for securing 1" (25.4mm) GPS Antenna mounting pipes. 2-3/8" (60.3mm) OD plain end pipe is purchased separately to accommodate specific antenna requirements. Each wall mount is manufactured from galvanized steel and includes all pipe mount hardware. Two wall mounts are recommended when securing panel antennas over 48" (1.2m) in length. Wall attachment hardware to accommodate different wall types must be purchased separately.

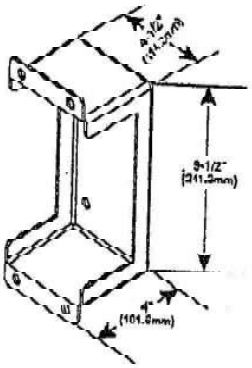

App.: Rooftops
Size: 9 1/2" (241.3mm) high
Design: Unique, narrow bracket
Feature: Ideal for GPS installs

Mounts to: Walls
Material: Hot dip galv. steel
Incl.: Bracket and pipe clamps
Order Sep.: Up to 2-3/8" OD (60.3mm) OD pipe

Part #	Description	Price US$ Kit Qty.	Wt. lbs (Wt. kg)
MT-249	Low Profile Wall Mount	45.00 Each	5.2 (2.4)

Make use of the Index by Part Number and Index by Description located in the back of this Buyers' Guide to quickly locate the exact components that you require.