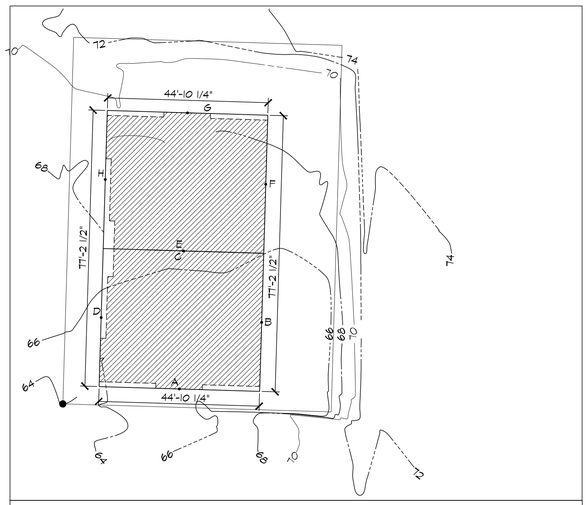

LOT COVERAGE CALCULATION:

LOT 1: (NORTH LOT)

TOTAL SITE AREA = 4,406 SF

ALLOWABLE LOT COVERAGE
= 60% OF SITE= 2,643.6 SF

PROPOSED LOT COVERAGE
MAIN STRUCTURE AND PAVING = 2,358.7 SF
LANDSCAPE AND PLANTER WALLS = 96.2 SF

TOTAL LOT COVERAGE = 2,455 SF

% PROPOSED LOT COVERAGE = 56 %

LOT 2: (SOUTH LOT)

TOTAL SITE AREA = 3,282 SF

ALLOWABLE LOT COVERAGE
= 60% OF SITE = 1,969.2 SF

PROPOSED LOT COVERAGE
MAIN STRUCTURE AND PAVING =1,871.6 SF
LANDSCAPE AND PLANTER WALLS =75.4 SF
MECHANICAL EQUIPMENT PADS = 12.50 SF

TOTAL LOT COVERAGE = 1,960 SF

% PROPOSED LOT COVERAGE = 59.7 %

AVERAGE BUILDING ELEVATION (ABE) = (MIDPOINT ELEVATIONS) X (LENGTH OF WALL SEGMENTS) / (TOTAL LENGTH OF WALL SEGMENTS)

MID-POINT ELEV.	RECTANGLE SEGMENT LENGTH
A = 64.66'	44.85'
B = 66.0'	38.605'
C = 67.0'	44.85'
D = 65.2'	38.605'
E = 67.0'	44.85'
F = 67.26'	38.605'
G = 68.65'	44.85'
H = 68.77'	38.605'

(64.66 * 44.85) + (66.0*38.605) + (67.0*44.85) + (65.2*38.605) = 10,969.926 = 65.72' ABE
(44.85*2 + 38.605*2) 166.91

(67.0 * 44.85) + (67.26*38.605) + (68.65*44.85) + (68.77*38.605) = 11,335.34 = 67.91' ABE
(44.85*2 + 38.605*2) 166.91

AVERAGE BUILDING ELEVATION(ABE) = (65.72' + 67.91')/2 = 66.815'

MAX. ALLOWABLE BUILDING HEIGHT LIMIT = 30.0' + ABE = 96.815'

- SEE ELEVATION ON A201 FOR REFERENCE TO BUILDING HEIGHTS AND ABE

AVE. BUILDING ELEVATION & LOT COVERAGE CALCULATIONS

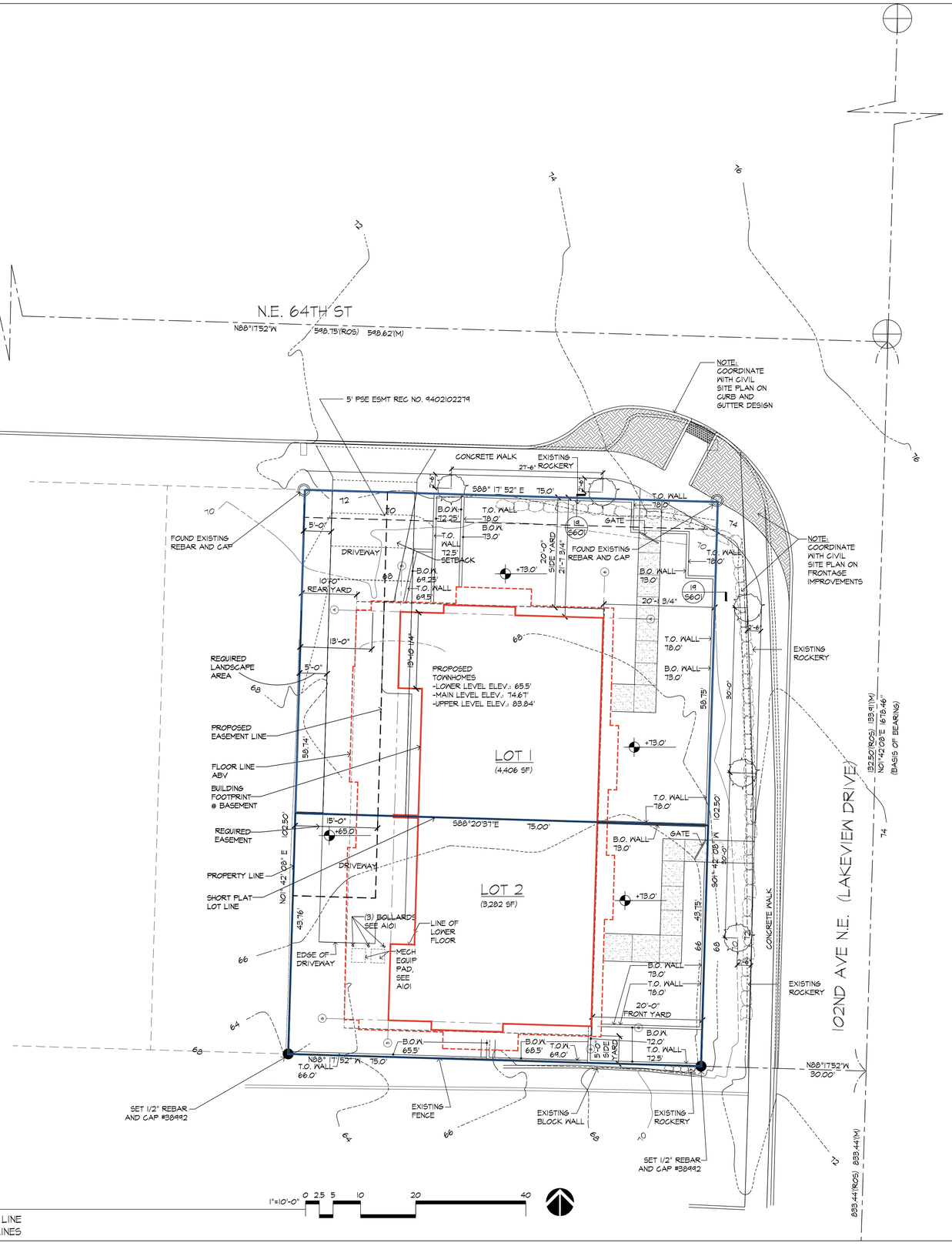

SITE PLAN

1"=10'-0" 0 2.5 5 10 20 40

PROPERTY LINE
SETBACK LINES

#3369 REGISTERED ARCHITECT STATE OF WASHINGTON

BRIAN BRAND

COPYRIGHT © 2014
BAYLIS ARCHITECTS INCORPORATED
ALL RIGHTS RESERVED

THIS DOCUMENT, AND THE IDEAS AND DESIGNS INCORPORATED HEREIN, IS THE PROPERTY OF BAYLIS ARCHITECTS INC., AND MAY NOT BE REUSED, IN WHOLE OR IN PART, WITHOUT THE WRITTEN CONSENT OF BAYLIS ARCHITECTS INCORPORATED.

KIRKLAND TOWNHOMES
10143 NE 64TH STREET
KIRKLAND WA

PROJECT NUMBER:	14-0419
PROJECT MANAGER:	JL
DRAWN BY:	JD
PLOT DATE:	Mar 29, 2016 - 11:35am

DATE: MAR. 24, 2016 - SHORT PLAT
(SUBDIVISION PROCESS I SUBMITTAL)

REVISIONS:

baylis ARCHITECTS
10801 Main Street, #110 | Bellevue,WA 98004
1904 Third Avenue, #330 | Seattle, WA 98101
BaylisArchitects.com | (425) 454 0566

SHORT PLAT
SITE PLAN

A003

Drawing Name: P:\2014\14-0419 Kirkland Townhomes\03 Drawings\302 Design Drawings\04 CD\04.4 Short Plat\A003 - SITE PLAN.dwg