Fire Systems West, Inc.
206 FRONTAGE ROAD NORTH, SUITE C
PACIFIC, WA 98047
(253) 833-1248

FIRE ALARM
Equipment Submittal

FOR

Wave 4th Floor
401 Parkplace Center
Kirkland, Washington
98033

Helping People Take Action℠

POWERPATH™ NAC POWER SUPPLIES

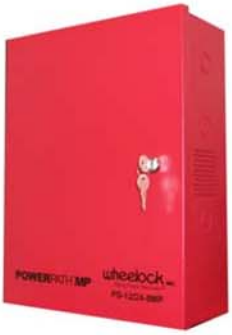

Series PS-12/24-8CP
Series PS-12/24-8*MP*

(Batteries Not Included)

Description

POWERPATH™ Series PS-12/24-8CP and PS-12/24-8MP are power limited 8 amp power supply/chargers used to expand the supervised power capability of a fire alarm control panel (FACP) for notification appliance circuits (NAC).

The PS-12/24-8CP provides up to 200 milliamps of continuous auxiliary output that can be used for control functions during alarm (or up to 60 milliamps for 60 hour battery requirements). The PS-12/24-8MP provides up to 3.5 amps of auxiliary output that is available only during nonalarm condition for such applications as door holder systems.

Both models provide regulated and filtered 12 or 24 VDC output to four (4) Class "B" or two (2) Class "A" circuits. Each Class "B" circuit has a rating of three (3) amps with a total output of up to eight (8) amps. Each Class "A" circuit is rated at three (3) amps. Two (2) Class "A" or Class "B" inputs from an FACP and two (2) dry contact inputs are provided to trigger the outputs. The units accept either 12 or 24 VDC inputs and provide 12 or 24 VDC outputs. Both units support a full 8 amps of notification power even if the battery is in a degraded mode and only AC power is connected.

POWERPATH™ Series PS-12/24-8CP and PS-12/24-8*MP* are compatible with all Wheelock 12 or 24 VDC Life Safety Notification Appliances and with their Patented **BUILT-IN SYNCHRONIZED MODE** feature, they can control and operate all of Wheelock's Synchronized Notification Appliances, including silencing audibles while maintaining strobe activation.

Features

Approvals

- Approvals Include: UL Standard 864, California State Fire Marshal (CSFM), (New York City (MEA), Factory Mutual (FM), Chicago (BFP) See Approvals by model in Specification and Ordering Information
- Compliant with NFPA 72

Inputs

- **Compatible with 12 or 24 VDC FACP**
- **115 VAC @ 50/60 Hz or 240 VAC @ 50/60 Hz**
- Two 12 or 24VDC NAC Initiating Circuits from host panel
- Two "Dry" contact input circuits
- Accepts 2 Class "A" or 2 Class "B" NAC circuit inputs
- Additional activation options are: NC contacts or open collector of a transistor

Outputs

- 8 amperes rated supply current @ 12 or 24 VDC
- Filtered and regulated power supply outputs
- Class 2 rated power limited outputs
- Dip switch selectable options
- **Field selectable 12 or 24 VDC outputs**
- **4 Class "B" or 2 Class "A" or 1 Class "A" and 2 Class "B" Notification Appliance Circuits)**
- **Each Class "B" output has a maximum rating of three (3) amperes**
- **Each Class "A" output has a maximum rating of three (3) amperes**
- Code 3 (Temporal) option
- Steady output option

Outputs Cont.

- Built-In Wheelock Synchronization Protocol
- Input and output synchronization (including pass through)

Supervision

- FACP NAC supervision steered to either input #1 or #2
- Common input and output trouble circuit
- Input and output LED indicators
- AC fail supervision (Form "C" contacts rated @ 1 amp @ 24 VDC or 115 VAC)
- Battery presence and low battery supervision (Form "C" contacts rated @ 1 amp @ 24 VDC or 115 VAC)
- Ground fault detection
- 4 latching LED's for NAC trouble annunciation

Power

- **Not Battery Dependent - Full 8A even if battery is degraded**
- Automatic switch over to standby batteries when AC fails
- **Supports sealed lead acid or gel type batteries**
- Fused battery protection
- Thermal and short circuit protection with auto reset
- **Supports both 7AH or 12AH batteries in the same cabinet** (Cabinet Size: 16" H x 12.25" W x 5" D)

Auxiliary Power

- Up to 200 mA continuous with PS-12/24-8CP
- Up to 3.5 amps nonalarm with PS-12/24-8MP

Copyright 2004 Wheelock, Inc. All rights reserved.

Normal Mode (Class B)

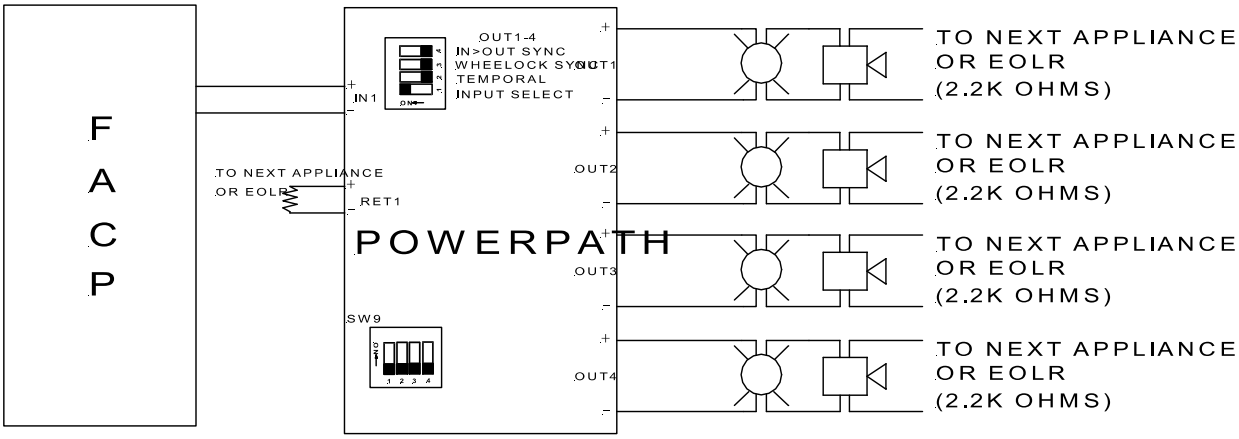

Normal Mode (Class A)

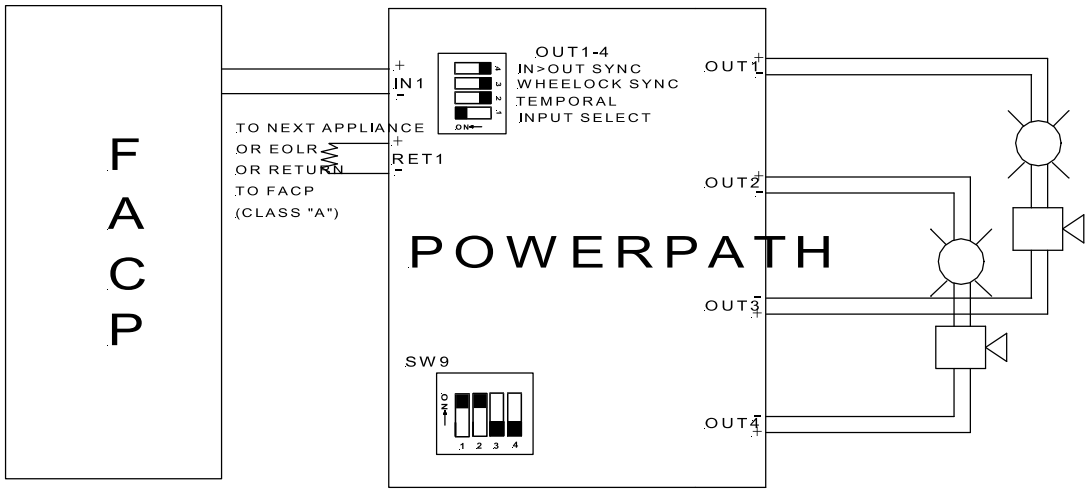

POWERPATH™ Operating Modes (refer to Installation Manual):

Normal Mode: Provides constant 12 VDC or 24 VDC output upon initiation by a voltage to input IN1 or IN2 or by a contact opening on DRY1 or DRY2. The unit returns to standby mode when the input is deactivated.

Wheelock Sync Mode: Provides signals for synchronization of patented Wheelock audible and strobe notification appliances. Audibles can also be silenced in this mode while the strobes continue to flash.

In>Out Sync Mode: Accepts a coded signal or synchronization signal on the input to provide a coded output or synchronized output. This signal may come from a FACP, another POWERPATH or a Wheelock SM or DSM synchronization module. Caution: Do not use strobes on coded output circuits.

Temporal Mode: Codes the output voltage in a code-3 temporal pattern to drive audible appliances such as horns, bells or chimes. Caution: Do not use strobes on coded output circuits.

Notification Appliance Circuit Layout and Design	Project	
	No.	
	By	Date

Subject

Architects and Engineers Specifications

The power supplies shall be Wheelock **POWER**PATH™ Series PS-12/24-8CP or PS-12/24-8MP, or equivalent. The units shall be stand alone power supplies intended for powering fire alarm notification appliances via their own Notification Appliance Circuit(s) (NAC). The units shall be UL 864 Listed for power limited operation of their outputs and comply with NFPA 70 (NEC), article 760.

The power supplies shall support a full 8A of notification power even if the battery is in a degraded mode and only AC power is connected.

The power supplies shall be activated by a standard Notification Appliance Circuit (NAC) from any Fire Alarm Control Panel (FACP) or a "Dry contact" closure. The units shall be 8 ampere, 12 or 24 VDC, regulated and filtered, supervised remote power supply/ chargers. The power supplies shall provide a full 8 amperes of current and shall not be battery dependent. They shall operate over the voltage range of 8 to 33 VDC or FWR. The primary application of the units shall be to expand fire alarm system capabilities for additional NAC circuits to support ADA requirements and to provide auxiliary power to support system accessories or functions. The power supplies shall provide four Class "B", two Class "A", or two Class "B" and one Class "A" NAC circuit(s). The PS-12/24-8CP units shall also supply up to 200 mA of auxiliary power that is available during both nonalarm and alarm. The PS-12/24-8MP units shall also supply auxiliary power of not less than 3.5A at 24 VDC during nonalarm. The power supplies shall be capable of charging batteries of up to 12 ampere hours per NFPA 72 (1999). Input activation options shall be from not less than two NAC circuits or Dry Contact closures. These inputs shall have the capability of being directed to any combination of the four NAC circuit outputs. Each NAC circuit output shall be rated at 3 amperes for Class "B" applications or 3 amperes each for Class "A". The outputs shall be programmable to generate a steady or Temporal (Code 3) output and or a synchronized strobe or horn output. The power supplies shall provide independent loop supervision for either Class "A" or Class "B" FACP NAC circuits and shall have the capability to "steer" all alarm or trouble conditions to either incoming NAC circuit. The units shall have common output terminals. The power supplies shall be powered from a 120 VAC or 240 VAC source with a current consumption of 5 amperes max. The unit shall incorporate short circuit protection with auto reset. The power supply shall incorporate a built in battery charger for lead acid or gel type batteries with automatic switchover to battery back up in the event of AC power failure. The charger shall incorporate fused protection for the batteries and have the ability to report low battery and/or no battery condition(s). Standby current for battery back up shall be 100 mA max. The cabinet dimensions shall be 16" H x 12.25" W x 5" D.

⚠ WARNING: PLEASE READ THESE SPECIFICATIONS AND INSTALLATION INSTRUCTIONS CAREFULLY BEFORE USING, SPECIFYING OR APPLYING THIS PRODUCT. FAILURE TO COMPLY WITH ANY OF THESE INSTRUCTIONS, CAUTIONS AND WARNINGS COULD RESULT IN IMPROPER APPLICATION, INSTALLATION AND/OR OPERATION OF THESE PRODUCTS IN AN EMERGENCY SITUATION, WHICH COULD RESULT IN PROPERTY DAMAGE, AND SERIOUS INJURY OR DEATH TO YOU AND/OR OTHERS.

Specifications and Ordering Information

Model Number	Order Code	Input Voltage/Current	Approvals			
			UL	MEA	CSFM	FM
PS-12/24-8CP	3047	120/220 VAC @ 50/60 Hz; 5.0 amps max.	X	*	X	*
PS-12/24-8MP	3046	120/220 VAC @ 50/60 Hz; 5.0 amps max.	X	X	X	X

X= Approved
*= Pending

Output NAC Circuits	Output Voltage/Current
Four (4) Class "B"	12/24 VDC @ 3 amps per Circuit
Two (2) Class "A" or	12/24 VDC @ 3 amps per Circuit
One (1) Class "A" and Two (2) Class "B"	12/24 VDC @ 3 amps per Circuit (Class "A") 12/24 VDC @ 3 amps per Circuit (Class "B")
Standby Current	0.060 Amps
Alarm Current	0.100 Amps
Total NAC Current	8 Amps Max.

Standby Batteries	Standby Time	Alarm Output Total Amps/Minutes	Aux Output PS-12/24-8MP	Aux Output PS-12/24-8CP
24 VDC/12 AH (uses two (2) 12 VDC batteries in series)	24 Hours	8 Amps/15 Minutes	3.5A during nonalarm	200 mA
	60 Hours	8 Amps/15 Minutes		60 mA
12 VDC/12 AH	24 Hours	8 Amps/15 Minutes		200 mA
	60 Hours	8 Amps/15 Minutes		60 mA

NOTE: Due to continuous development of our products, specifications and offerings are subject to change without notice in accordance with Wheelock Inc. standard terms and conditions.

WE ENCOURAGE AND SUPPORT NICET CERTIFICATION

National Sales Office
800-631-2148
Canada 800-397-5777
E-Mail: Info@wheelockinc.com

3 YEAR WARRANTY
Made in USA

NEMA Member

Distributed By:

Genesis Remote Mount Signal Master Module Installation Sheet

Description

The Genesis Remote Mount Signal Master Module provides precision synchronization and independent horn control for Genesis strobes and horns. Model numbers are listed below.

Table 1: Models

Description	Numbers	
Genesis Remote Mount Signal Master Module [1]	ADTG1M-RM, G1M-RM XLSG1M-RM	EG1M-RM MG1M-RM ZG1M-RM

[1] This module is compatible with Genesis, Enhanced Integrity (synchronized), and Audible Detector base devices. For specific models and quantities, see the compatibility list referenced on the control panel.

Installation

Install in accordance with applicable requirements in the latest editions of the NFPA codes and standards and *Canadian Electrical Code*, Part 1, Section 32, and in accordance with the local authorities having jurisdiction.

Notes

- The Genesis Remote Mount Signal Master Module is shipped from the factory as an assembled unit; it contains no user-serviceable parts and should not be disassembled.
- The Signal Master Module only synchronizes appliances that are electrically connected to it and are electrically downstream of it
- Only one module is required for each notification appliance circuit.
- The strobe circuit of the module requires a dedicated NAC whereas the horn circuit of the module can be cascaded with other Genesis Signal Master modules on one NAC.
- The strobe circuit must be continuous in alarm mode.
- When determining allowable wire resistance, refer to the voltage rating of the module, the signaling appliance, and the control panel specifications.

To install the module:

1. Verify that all field wiring is free of opens, shorts, and ground faults.
2. Make all wiring connections as shown in Figure 2 through Figure 4.
3. Using the 4-24 x 1/2 in. screw, mount the wall plate on the module as shown in Figure 1.
4. Using the two 6-32 x 1/2 machine screws, mount the module in the electrical box.

Figure 1: Mounting in a single-gang box

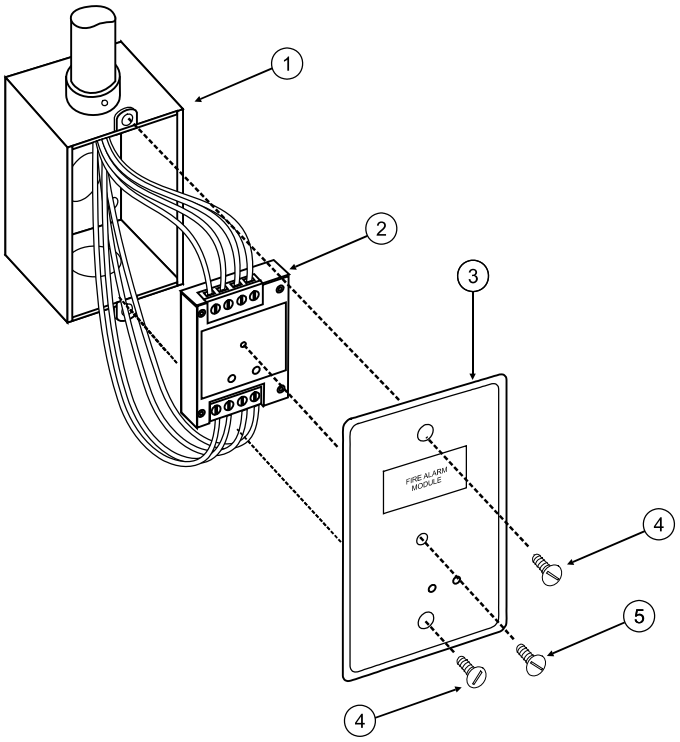

1. Compatible electrical box
2. Remote Signal Master Module
3. Wall plate
4. 6-32 x 1/2 in. screw
5. 4-24 x 1/2 in. screw

© 2013 UTC Fire & Security. All rights reserved.

P/N 3100299 • REV 07 • REB 30JAN13

Figure 2: Horn silence / synchronization using two NACs

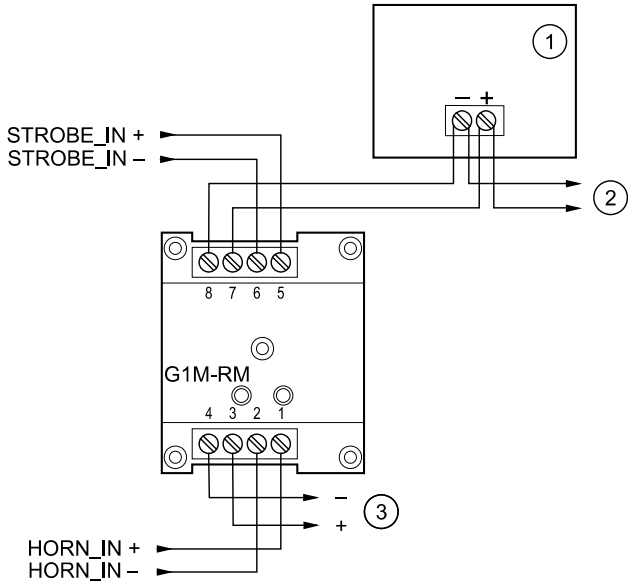

1. Strobe or horn/strobe
2. To next appliance, EOL resistor, or Class A circuit return
3. To next G1M-RM or end of line resistor

Notes

- Polarity shown in alarm condition
- Horn circuit can be silenced without turning off strobes

Figure 4: Synchronization using one NAC

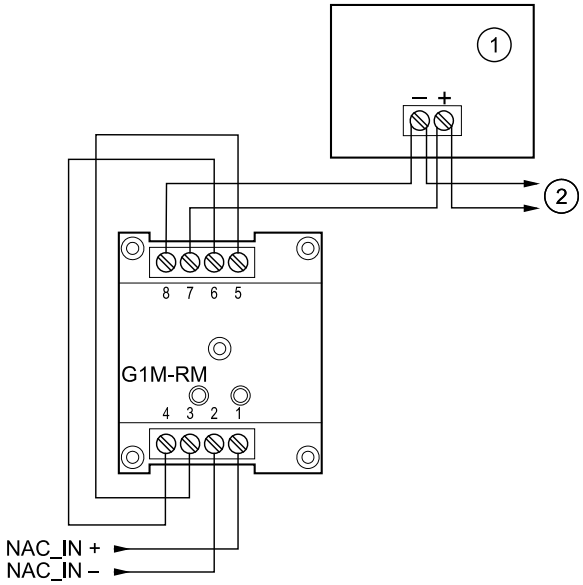

1. Strobe or horn/strobe
2. To next appliance, EOL resistor, or Class A circuit return

Notes

- Polarity shown in alarm condition
- Horn circuit cannot be silenced without turning off strobes

Figure 3: Horn silence / synchronization using one NAC

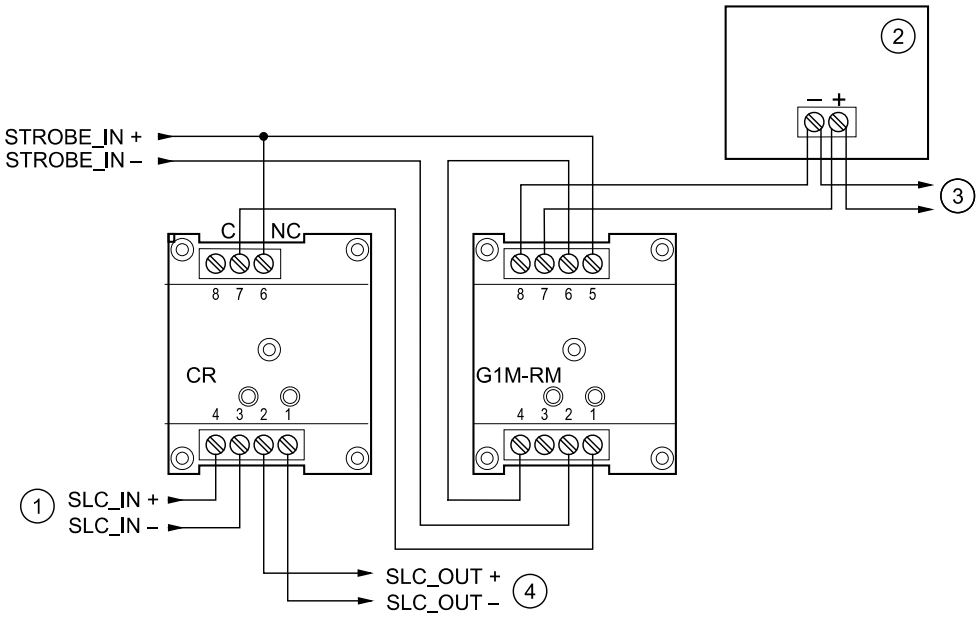

1. From previous device or control panel
2. Strobe or horn/strobe
3. To next appliance, EOL resistor, or Class A circuit return
4. To next device or Class A circuit return

Notes

- Polarity shown in alarm condition
- Horn circuit can be silenced without turning off strobes
- G1M-RM, CR module, and wire nut must be located in the same enclosure as the Genesis Signal Master.

Table 2: G1M-RM terminal connections

Terminal	Description	Terminal	Description
1	HORN IN +	5	STROBE IN +
2	HORN IN −	6	STROBE IN −
3	HORN OUT +	7	STROBE OUT +
4	HORN OUT -	8	STROBE OUT -

Specifications

Operating voltage	16 to 33 VDC; 16-33 VFWR
Output rating	3 A max. Actual value limited by system NAC and power outputs
Synchronization	
Flash	1/s within 10 mss indefinitely
Resistance between two appliances	20 Ω max.
Wire size	12 to 18 AWG (0.75 to 2.50 mm²)
Electrical box	
Compatible	2-1/2 in. (64 mm) deep single-gang box
Recommended	4 in. square box 1-1/2 in. (38 mm) deep with single-gang trim ring 3-3/4 x 2 in. (95 x 51 mm) (H x W) or greater
Operating environment	
Temperature	32 to 120 °F (0 to 49 °C)
Relative humidity	0 to 93% noncondensing

Regulatory information

Manufacturer	Edwards, A Division of UTC Fire & Security Americas Corporation, Inc. 8985 Town Center Parkway, Bradenton, FL 34202, USA
Year of manufacture	The first two digits of the product serial number (located on the product identification label) are the year of manufacture.
UL rating	Regulated 24 DC, Regulated 24 FWR [1]
Environmental class	UL: Indoor
North American standards	UL 1971, UL 1638, UL 464, CAN/ULC S525, CAN/ULC S526

[1] This module was tested to the regulated 24 VDC/FWR operating voltage limits of 16 V and 33 V. Do not apply 80% and 110% of these values for system operation.

Contact information

For contact information, see www.edwardsutcfs.com.

Field Configurable Ceiling Horn -Strobes

Genesis Series

One or more patents pending.

Overview

Genesis ceiling horn-strobes are small, compact, and attractive audible-visible emergency signaling devices. Protruding no more than 1.6" (41 mm), Genesis horn-strobes blend with any decor.

Thanks to patented breakthrough technology, Edwards Genesis strobes do not require bulky specular reflectors and lenses. Instead, an exclusive cavity design conditions light to produce a highly controlled distribution pattern. Significant development efforts employing this new technology have given rise to a new benchmark in strobe performance – FullLight technology.

FullLight strobe technology produces a smooth light distribution pattern without the spikes and voids characteristic of specular reflectors. This ensures the entire coverage area receives consistent illumination from the strobe flash. As a result, Genesis strobes with FullLight technology go well beyond the minimum UL-required "cross" pattern.

Depending on the model, Genesis horn-strobes feature 15 to 95, or 95 to 177 candela output (see ordering information), which is selectable with a conveniently-located switch on the front of the device. The candela output setting is clearly visible even after final installation, yet it remains locked in place to prevent unauthorized movement after installation.

Genesis horn-strobes feature textured housings in architecturally neutral white or eye-catching fire alarm red. An ingenious iconographic symbol indicates the purpose of the device. This universal symbol is code-compliant and is easily recognized by all building occupants regardless of what language they speak. Models with "FIRE" markings are also available.

Standard Features

- **Field configurable – no need to remove the device!**
  - 15/30/75/95 cd and 95/115/150/177 cd models available
  - Switch settings remain visible even after the unit is installed
  - Low/high dB settings
- **Unique low-profile design**
  - 30 per cent slimmer profile than comparable signals
  - No visible mounting screws
  - Available with white or red housings
- **Easy to install**
  - Fits all standard 4" square electrical boxes with plenty of room behind the signal for extra wire – no extension ring or trim plate needed
  - Pre-assembled with captive hardware – no loose pieces
  - #18 to #12 AWG terminals – ideal for long runs or existing wiring
- **Unparalleled performance**
  - Exclusive FullLight strobe technology produces the industry's most even light distribution
  - Single high-efficiency microprocessor controls both horn and strobe
  - Low current draw minimizes system overhead
  - Independent horn control provided over a single pair of wires
  - Highly regulated in-rush current allows the maximum number of strobes on a circuit
  - 100 dB peak – multiple frequency tone improves wall penetration

Application

Genesis strobes are UL 1971-listed for use indoors as ceiling- or wall-mounted public-mode notification appliances for the hearing impaired. Prevailing codes require strobes to be used where ambient noise conditions exceed 105 dBA (87dBA in Canada), where occupants use hearing protection, and in areas of public accommodation as defined in the *Americans with Disabilities Act (see application notes – USA)*.

Combination horn-strobe signals must be installed in accordance with guidelines established for strobe devices.

Strobes

Genesis strobes are UL 1971-listed for use indoors as ceiling- or wall-mounted public-mode notification appliances for the hearing impaired. Prevailing codes require strobes to be used where ambient noise conditions exceed specified levels, where occupants use hearing protection, and in areas of public accommodation. Consult with your Authority Having Jurisdiction for details.

All Genesis strobes exceed UL synchronization requirements (within 10 milliseconds other over a two-hour period) when used with a synchronization source. Synchronization is important in order to avoid epileptic sensitivity.

NOTE: The flash intensity of some visible signals may not be adequate to alert or waken occupants in the protected area. Research indicates that the intensity of strobe needed to awaken 90% of sleeping persons is approximately 100 cd. Edwards recommends that strobes in sleeping rooms be rated at at least 110 cd.

WARNING: These devices will not operate without electrical power. As fires frequently cause power interruptions, further safeguards such as backup power supplies may be required.

Horns

Genesis horn output reaches as high as 99 dB (peak) and features a unique multiple frequency tone that results in excellent wall penetration and an unmistakable warning of danger. All models may be configured for either coded or non-coded signal circuits. They can also be set for low dB output with a jumper cut that reduces horn output by about 5 dB.

The suggested sound pressure level for each signaling zone used with alert or alarm signals is at least 15 dB above the average ambient sound level, or 5 dB above the maximum sound level having a duration of at least 60 seconds, whichever is greater, measured 5 feet (1.5 m) above the floor. The average ambient sound level is, A-weighted sound pressure measured over a 24-hour period.

Doubling the distance from the signal to the ear will theoretically result in a 6 dB reduction of the received sound pressure level. The actual effect depends on the acoustic properties of materials in the space. A 3 dBA difference represents a barely noticeable change in volume.

Dimensions

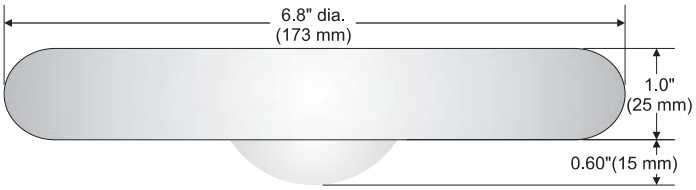

Installation and Mounting

All models are intended for indoor wall or ceiling applications only. Horn-strobes mount to any flush North-American 4" square electrical box.

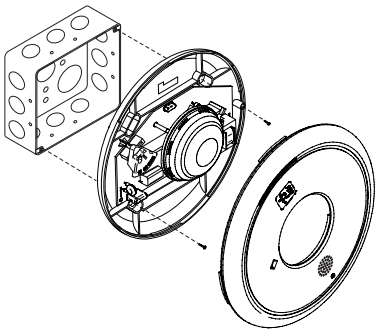

Genesis ceiling horn-strobes simply unlatch and twist to open. This gains access to mounting screws and the selectable candela switch. The shallow depth of Genesis devices leaves ample room behind the signal for extra wiring. Once installed with the cover in place, no mounting screws are visible.

Edwards recommends that these fire alarm horn-strobes always be installed in accordance with the latest recognized edition of national and local fire alarm codes.

Field Configuration

Depending on the model, Genesis horn-strobes may be set for 15 to 95, or 95 to 177 candela output (see ordering information). The output setting is changed by simply opening the device and sliding the switch to the desired setting. The horn-strobe does not have to be removed to change the output setting. The setting remains visible through a small window on the front of the device after the cover is closed.

The horn-strobe comes factory set for high dB output. Low dB output may be selected by cutting a jumper on the circuit board. This reduces the output by about 5 dB.

Wiring

Field wiring terminals accommodate #18 to #12 AWG (0.75 mm^2 to 2.5 mm^2) wiring. Horn/strobes are interconnected with a single pair of wires as shown below.

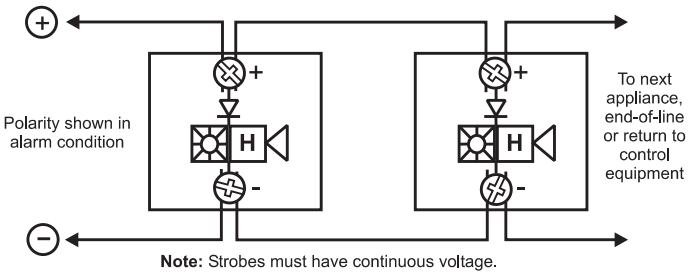

Note: Strobes must have continuous voltage.

Current Draw

EGC-HDVM Temporal Horn-strobe: High dB Setting

UL Rating	15 cd RMS	30 cd RMS	75 cd RMS	95 cd RMS
16 Vdc	147	190	316	372
16 Vfwr	189	253	417	451

EGC-HDVM Temporal Horn-strobe: High dB Setting

Typical Current	15 cd		30 cd		75 cd		95 cd	
	RMS	Mean	RMS	Mean	RMS	Mean	RMS	Mean
16 Vdc	111	95	152	143	281	276	333	328
20 Vdc	91	80	124	117	219	214	257	251
24 Vdc	80	71	108	101	185	180	212	207
33 Vdc	69	62	89	84	144	140	160	156
16 Vfwr	153	81	218	123	388	240	420	268
20 Vfwr	141	70	190	100	325	188	378	219
24 Vfwr	135	64	176	90	280	154	310	180
33 Vfwr	139	61	167	80	241	122	254	133

EGC-HDVM Temporal Horn-strobe: Low dB Setting

Typical Current	15 cd		30 cd		75 cd		95 cd	
	RMS	Mean	RMS	Mean	RMS	Mean	RMS	Mean
16 Vdc	108	91	149	139	275	269	327	322
20 Vdc	87	75	120	113	214	209	250	245
24 Vdc	76	66	103	97	180	175	205	201
33 Vdc	64	57	85	80	138	135	153	150
16 Vfwr	141	76	204	118	384	239	418	265
20 Vfwr	127	65	176	95	312	181	371	214
24 Vfwr	118	60	162	82	262	149	301	171
33 Vfwr	127	56	155	73	229	118	249	129

EGC-HDVMH High cd Temporal Horn-strobe: High dB Setting

95 cd RMS	115 cd RMS	150 cd RMS	177 cd RMS
341	399	506	570
487	578	670	711

EGC-HDVMH High cd Temporal Horn-strobe: High dB Setting

95 cd		115 cd		150 cd		177 cd	
RMS	Mean	RMS	Mean	RMS	Mean	RMS	Mean
324	322	377	374	477	474	554	551
258	256	299	296	369	366	417	414
220	217	252	249	304	301	341	338
172	169	188	185	223	220	244	241
463	265	535	312	665	400	718	442
392	211	439	240	517	287	587	334
346	179	382	212	458	246	498	271
296	142	323	152	358	178	387	194

EGC-HDVMH High cd Temporal Horn-strobe: Low dB Setting

95 cd		115 cd		150 cd		177 cd	
RMS	Mean	RMS	Mean	RMS	Mean	RMS	Mean
317	315	378	376	480	477	544	542
252	250	292	290	364	362	414	411
212	211	245	243	297	295	334	332
159	157	181	179	215	213	234	232
461	265	521	305	656	396	705	432
381	208	437	242	508	285	576	326
335	172	370	195	440	235	485	264
285	134	308	149	349	169	373	186

Notes and Comments

1. Current values are shown in mA.
2. UL Nameplate Rating can vary from Typical Current due to measurement methods and instruments used.
3. Edwards recommends using the Typical Current for system design including NAC and Power Supply loading and voltage drop calculations.
4. Use the Vdc RMS current ratings for filtered power supply and battery AH calculations. Use the Vfwr RMS current ratings for unfiltered power supply calculations.
5. Fuses, circuit breakers and other overcurrent protection devices are typically rated for current in RMS values. Most of these devices operate based upon the heating affect of the current flowing through the device. The RMS current (not the mean current) determines the heating affect and therefore, the trip and hold threshold for those devices.
6. Our industry has used 'mean' currents over the years. However, UL will direct the industry to use the 2004 RMS values in the future.

dBA output

High dB Setting	UL464		Average	Peak
	Temporal	Steady	Temporal/ Steady	Temporal/ Steady
16 Vdc	79.8	83.2	90.6	93.6
24 Vdc	83.3	85.4	93.6	96.6
33 Vdc	85	87.8	95.7	98.7

Low dB Setting	UL464		Average	Peak
	Temporal	Steady	Temporal/ Steady	Temporal/ Steady
16 Vdc	75	79.3	86.3	88.7
24 Vdc	78	83	88.8	92.4
33 Vdc	80.9	85.9	91.8	95.1

Notes

1. All values shown are dBA measured at 10 feet (3.01m); **2.** UL464 values measured in reverberation room; **3.** Average and Peak values are measured in anechoic chamber.

Light output - (effective cd)

Percent of UL rating versus angle

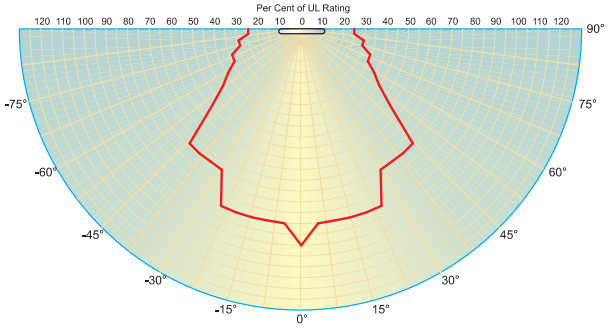

Contact us...

Phone: 1-800-336-4206
Web: www.edwardssignaling.com

Edwards Signaling is
an **EDWARDS** brand.

3 Farm Glen Boulevard
Farmington, CT 06032

In Canada, contact Chubb Edwards...
Email: inquiries@chubbedwards.com
Web: www.chubbedwards.com

© 2013 UTC Fire & Security Americas Corporation, Inc. All rights reserved. Specifications subject to change without notice. Edwards is part of UTC Climate, Controls & Security, a unit of United Technologies Corporation.

Specifications

Housing	Textured UV stabilized, color impregnated engineered plastic. Exceeds 94V-0 UL flammability rating. Red and white models available.
Lens	Optical grade polycarbonate (clear)
Mounting	North-American 4" square box, 2 1/8" (54 mm) deep (indoor wall or ceiling applications only).
Wire connections	Screw terminals: single input for both horn and strobe. #18 to #12 AWG (0.75 mm^2 to 2.5 mm^2) wire size
Operating environment	Indoor: 32-120°F (0-49°C) ambient temperature. 93% relative humidity
Agency listings/approvals	Meets or exceeds ULC-S525 & ULC-S526, year 2004 UL requirements for standards UL1638 and UL1971, and complies with UL1480. All horn-strobes comply with ADA Code of Federal Regulation Chapter 28 Part 36 Final Rule. CSFM, MEA. FM pending.
Operating voltage	EGC-HDVM series temporal-tone horn-strobes: non-coded, filtered 16-33 Vdc or unfiltered 16-33 Vdc FWR (or coded (audible NAC only) when used with optional EG1M Genesis Signal Master)
Strobe output rating	UL 1971, UL 1638, ULC S526: selectable 15/30/75/95 cd (EGC-HDVM) and 95/115/150/177 cd (EGC-HDVMH)
Strobe flash rate	EGC-HDVM series temporal-tone horn-strobes: one flash per second synchronized with optional EG1M Genesis Signal Master indefinitely within 10 milliseconds (or self-synchronized within 200 milliseconds over thirty minutes on a common circuit without EG1M Genesis Signal Master) Temporal setting (private mode only): synchronized to temporal output of horns on same circuit
Synchronization Sources	EG1M-RM, EBPS6A, EBPS10A, E-NAC, E-FSC, E-FSA
Horn pulse rate	EGC-HDVM series temporal-tone horn-strobes: temporal rate synchronized with optional EG1M Genesis Signal Master indefinitely within 10 milliseconds (or self-synchronized within 200 milliseconds over thirty minutes on a common circuit without EG1M Genesis Signal Master)
Temporal audible pattern	½ sec ON, ½ sec OFF, ½ sec ON, ½ sec OFF, ½ sec ON, 1½ sec OFF, then repeat cycle

Ordering Information

Catalog Number	Housing Color	Marking	Description	Ship Wt. lbs (kg)
EGC-HDVM	White	None	Genesis Ceiling/Wall Horn-Strobe with selectable 15, 30, 75, or 95 cd output	0.82 (1.8)
EGCF-HDVM	White	"FIRE"		
EGCFR-HDVM	Red	"FIRE"		
EGC-HDVMH	White	None	Genesis Ceiling/Wall Horn-Strobe with selectable 95, 115, 150, or 177 cd output	
EGCF-HDVMH	White	"FIRE"		

White Field Configurable Ceiling Horn-Strobes may be ordered with or without optional 'FIRE' marking. Red Horn-Strobes come with 'FIRE" marking.