Fire Systems West, Inc.
206 FRONTAGE ROAD NORTH, SUITE C
PACIFIC, WA 98047
(253) 833-1248

FIRE ALARM
Equipment Submittal

FOR

Wave 2nd Floor
401 Parkplace Center
Kirkland, Washington
98033

Helping People Take Action℠

POWERPATH™ NAC POWER SUPPLIES

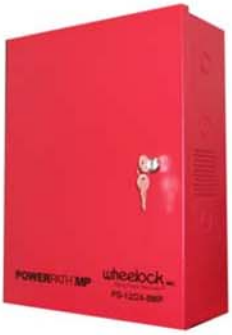

Series PS-12/24-8CP
Series PS-12/24-8*MP*

(Batteries Not Included)

Description

POWERPATH™ Series PS-12/24-8CP and PS-12/24-8MP are power limited 8 amp power supply/chargers used to expand the supervised power capability of a fire alarm control panel (FACP) for notification appliance circuits (NAC).

The PS-12/24-8CP provides up to 200 milliamps of continuous auxiliary output that can be used for control functions during alarm (or up to 60 milliamps for 60 hour battery requirements). The PS-12/24-8MP provides up to 3.5 amps of auxiliary output that is available only during nonalarm condition for such applications as door holder systems.

Both models provide regulated and filtered 12 or 24 VDC output to four (4) Class "B" or two (2) Class "A" circuits. Each Class "B" circuit has a rating of three (3) amps with a total output of up to eight (8) amps. Each Class "A" circuit is rated at three (3) amps. Two (2) Class "A" or Class "B" inputs from an FACP and two (2) dry contact inputs are provided to trigger the outputs. The units accept either 12 or 24 VDC inputs and provide 12 or 24 VDC outputs. Both units support a full 8 amps of notification power even if the battery is in a degraded mode and only AC power is connected.

POWERPATH™ Series PS-12/24-8CP and PS-12/24-8*MP* are compatible with all Wheelock 12 or 24 VDC Life Safety Notification Appliances and with their Patented **BUILT-IN SYNCHRONIZED MODE** feature, they can control and operate all of Wheelock's Synchronized Notification Appliances, including silencing audibles while maintaining strobe activation.

Features

Approvals

- Approvals Include: UL Standard 864, California State Fire Marshal (CSFM), (New York City (MEA), Factory Mutual (FM), Chicago (BFP) See Approvals by model in Specification and Ordering Information
- Compliant with NFPA 72

Inputs

- **Compatible with 12 or 24 VDC FACP**
- **115 VAC @ 50/60 Hz or 240 VAC @ 50/60 Hz**
- Two 12 or 24VDC NAC Initiating Circuits from host panel
- Two "Dry" contact input circuits
- Accepts 2 Class "A" or 2 Class "B" NAC circuit inputs
- Additional activation options are: NC contacts or open collector of a transistor

Outputs

- 8 amperes rated supply current @ 12 or 24 VDC
- Filtered and regulated power supply outputs
- Class 2 rated power limited outputs
- Dip switch selectable options
- **Field selectable 12 or 24 VDC outputs**
- **4 Class "B" or 2 Class "A" or 1 Class "A" and 2 Class "B" Notification Appliance Circuits)**
- **Each Class "B" output has a maximum rating of three (3) amperes**
- **Each Class "A" output has a maximum rating of three (3) amperes**
- Code 3 (Temporal) option
- Steady output option

Outputs Cont.

- Built-In Wheelock Synchronization Protocol
- Input and output synchronization (including pass through)

Supervision

- FACP NAC supervision steered to either input #1 or #2
- Common input and output trouble circuit
- Input and output LED indicators
- AC fail supervision (Form "C" contacts rated @ 1 amp @ 24 VDC or 115 VAC)
- Battery presence and low battery supervision (Form "C" contacts rated @ 1 amp @ 24 VDC or 115 VAC)
- Ground fault detection
- 4 latching LED's for NAC trouble annunciation

Power

- **Not Battery Dependent - Full 8A even if battery is degraded**
- Automatic switch over to standby batteries when AC fails
- **Supports sealed lead acid or gel type batteries**
- Fused battery protection
- Thermal and short circuit protection with auto reset
- **Supports both 7AH or 12AH batteries in the same cabinet** (Cabinet Size: 16" H x 12.25" W x 5" D)

Auxiliary Power

- Up to 200 mA continuous with PS-12/24-8CP
- Up to 3.5 amps nonalarm with PS-12/24-8MP

Copyright 2004 Wheelock, Inc. All rights reserved.

Normal Mode (Class B)

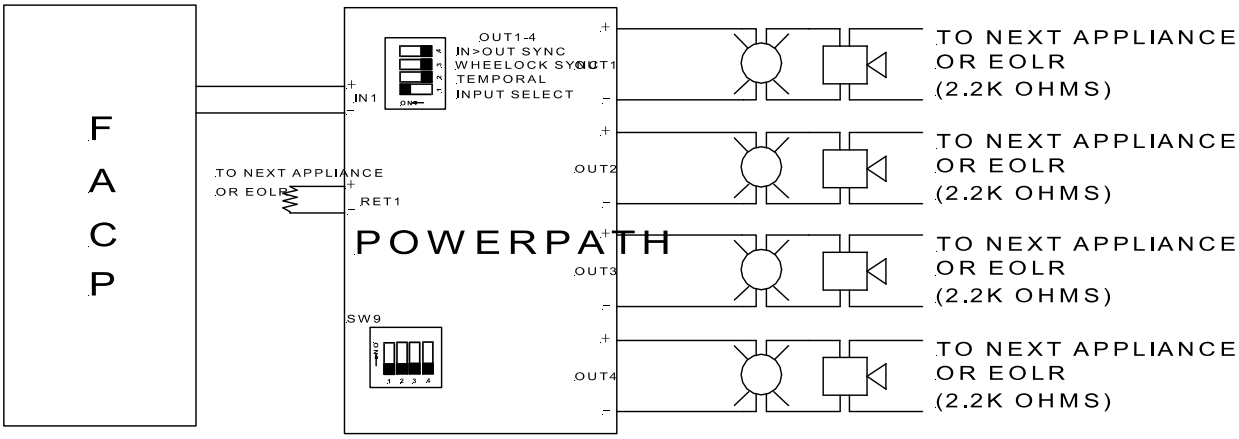

Normal Mode (Class A)

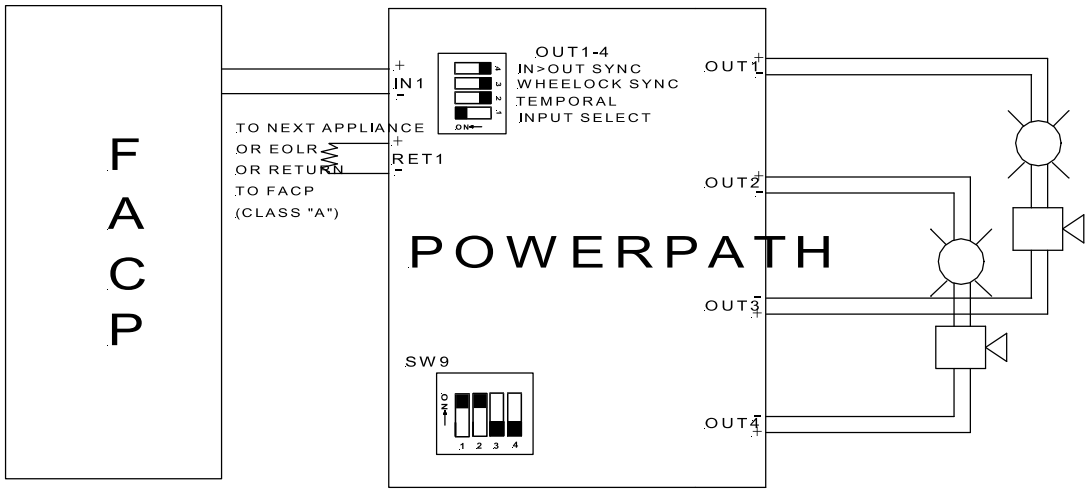

POWERPATH™ Operating Modes (refer to Installation Manual):

Normal Mode: Provides constant 12 VDC or 24 VDC output upon initiation by a voltage to input IN1 or IN2 or by a contact opening on DRY1 or DRY2. The unit returns to standby mode when the input is deactivated.

Wheelock Sync Mode: Provides signals for synchronization of patented Wheelock audible and strobe notification appliances. Audibles can also be silenced in this mode while the strobes continue to flash.

In>Out Sync Mode: Accepts a coded signal or synchronization signal on the input to provide a coded output or synchronized output. This signal may come from a FACP, another POWERPATH or a Wheelock SM or DSM synchronization module. Caution: Do not use strobes on coded output circuits.

Temporal Mode: Codes the output voltage in a code-3 temporal pattern to drive audible appliances such as horns, bells or chimes. Caution: Do not use strobes on coded output circuits.

Notification Appliance Circuit Layout and Design	Project	
	No.	
	By	Date

Subject

Architects and Engineers Specifications

The power supplies shall be Wheelock **POWER**PATH™ Series PS-12/24-8CP or PS-12/24-8MP, or equivalent. The units shall be stand alone power supplies intended for powering fire alarm notification appliances via their own Notification Appliance Circuit(s) (NAC). The units shall be UL 864 Listed for power limited operation of their outputs and comply with NFPA 70 (NEC), article 760.

The power supplies shall support a full 8A of notification power even if the battery is in a degraded mode and only AC power is connected.

The power supplies shall be activated by a standard Notification Appliance Circuit (NAC) from any Fire Alarm Control Panel (FACP) or a "Dry contact" closure. The units shall be 8 ampere, 12 or 24 VDC, regulated and filtered, supervised remote power supply/ chargers. The power supplies shall provide a full 8 amperes of current and shall not be battery dependent. They shall operate over the voltage range of 8 to 33 VDC or FWR. The primary application of the units shall be to expand fire alarm system capabilities for additional NAC circuits to support ADA requirements and to provide auxiliary power to support system accessories or functions. The power supplies shall provide four Class "B", two Class "A", or two Class "B" and one Class "A" NAC circuit(s). The PS-12/24-8CP units shall also supply up to 200 mA of auxiliary power that is available during both nonalarm and alarm. The PS-12/24-8MP units shall also supply auxiliary power of not less than 3.5A at 24 VDC during nonalarm. The power supplies shall be capable of charging batteries of up to 12 ampere hours per NFPA 72 (1999). Input activation options shall be from not less than two NAC circuits or Dry Contact closures. These inputs shall have the capability of being directed to any combination of the four NAC circuit outputs. Each NAC circuit output shall be rated at 3 amperes for Class "B" applications or 3 amperes each for Class "A". The outputs shall be programmable to generate a steady or Temporal (Code 3) output and or a synchronized strobe or horn output. The power supplies shall provide independent loop supervision for either Class "A" or Class "B" FACP NAC circuits and shall have the capability to "steer" all alarm or trouble conditions to either incoming NAC circuit. The units shall have common output terminals. The power supplies shall be powered from a 120 VAC or 240 VAC source with a current consumption of 5 amperes max. The unit shall incorporate short circuit protection with auto reset. The power supply shall incorporate a built in battery charger for lead acid or gel type batteries with automatic switchover to battery back up in the event of AC power failure. The charger shall incorporate fused protection for the batteries and have the ability to report low battery and/or no battery condition(s). Standby current for battery back up shall be 100 mA max. The cabinet dimensions shall be 16" H x 12.25" W x 5" D.

⚠ WARNING: PLEASE READ THESE SPECIFICATIONS AND INSTALLATION INSTRUCTIONS CAREFULLY BEFORE USING, SPECIFYING OR APPLYING THIS PRODUCT. FAILURE TO COMPLY WITH ANY OF THESE INSTRUCTIONS, CAUTIONS AND WARNINGS COULD RESULT IN IMPROPER APPLICATION, INSTALLATION AND/OR OPERATION OF THESE PRODUCTS IN AN EMERGENCY SITUATION, WHICH COULD RESULT IN PROPERTY DAMAGE, AND SERIOUS INJURY OR DEATH TO YOU AND/OR OTHERS.

Specifications and Ordering Information

Model Number	Order Code	Input Voltage/Current	Approvals			
			UL	MEA	CSFM	FM
PS-12/24-8CP	3047	120/220 VAC @ 50/60 Hz; 5.0 amps max.	X	*	X	*
PS-12/24-8MP	3046	120/220 VAC @ 50/60 Hz; 5.0 amps max.	X	X	X	X

X= Approved
*= Pending

Output NAC Circuits	Output Voltage/Current
Four (4) Class "B"	12/24 VDC @ 3 amps per Circuit
Two (2) Class "A" or	12/24 VDC @ 3 amps per Circuit
One (1) Class "A" and Two (2) Class "B"	12/24 VDC @ 3 amps per Circuit (Class "A") 12/24 VDC @ 3 amps per Circuit (Class "B")
Standby Current	0.060 Amps
Alarm Current	0.100 Amps
Total NAC Current	8 Amps Max.

Standby Batteries	Standby Time	Alarm Output Total Amps/Minutes	Aux Output PS-12/24-8MP	Aux Output PS-12/24-8CP
24 VDC/12 AH (uses two (2) 12 VDC batteries in series)	24 Hours	8 Amps/15 Minutes	3.5A during nonalarm	200 mA
	60 Hours	8 Amps/15 Minutes		60 mA
12 VDC/12 AH	24 Hours	8 Amps/15 Minutes		200 mA
	60 Hours	8 Amps/15 Minutes		60 mA

NOTE: Due to continuous development of our products, specifications and offerings are subject to change without notice in accordance with Wheelock Inc. standard terms and conditions.

WE ENCOURAGE AND SUPPORT NICET CERTIFICATION

National Sales Office
800-631-2148
Canada 800-397-5777
E-Mail: Info@wheelockinc.com

3 YEAR WARRANTY
Made in USA

NEMA Member

Distributed By:

GENTEX CORPORATION

AVSM GANGABLE SYNCHRONIZATION CONTROL MODULE

AVSM CONTROL MODULE

Applications

The Gentex AVSM synchronization control module is designed to provide an easy way to synchronize multiple horns, strobes and horn/strobes using only two wires in instances where a synchronized flash is required. When synchronizing multiple horns and horn/strobes there is the ability to silence the horn while allowing the strobes to continue to flash.

Incorporating the control module as shown in the following diagrams, the control module will control the power to the signaling device to produce synchronized operation.

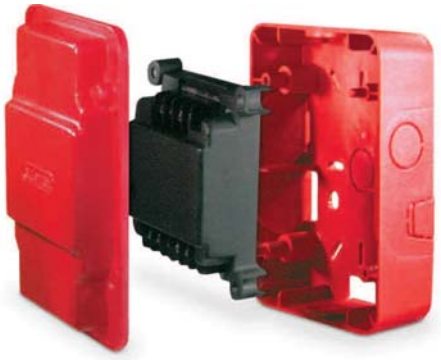

Standard Features

- AVSM operates with all current manufactured Gentex signals
- Synchronize horn and strobe with the use of only two wires
- No limit to the number of modules that can be synchronized together
- Module is rated for 3 amps continuous current and 5 amps surge or inrush current
- Synchronizes to 1Hz flash rate
- Operates 1 class 'A' circuit or 2 class 'B' circuits at 3 amps per circuit.
- Dual synchronization module **ONLY** when using 2 class 'B' circuits.
- A green LED status indicator to signal operation of module.
- Option to silence the horn while strobes continue to flash when using temporal 3 mode.
- The AVSM **WILL NOT** operate the ST/HS Series.
- Three year warranty from date of purchase.

Product Listings

SIGNALING UL LISTED

- ANSI/UL 464 and ANSI/UL 1971 Listed
- CSFM: 7125-0569:123
- MEA: 285-91-E Vol.XVIII

Product Compliance

- NFPA 72
- IBC/IFC/IRC
- City & State Ordinances/Laws/Regulations
- Quality Management System is certified to: ISO 9001:2008

NEMA MEMBER

ASSEMBLED IN THE USA

Model Number	Part Number
AVSM-R	904-1243-002
AVSM-W	904-1244-002

AVSM Series Product Current Draw	
Product	AVSM
12 VDC	**27mA**
12 VDC UL Max[1]	31mA
24 VDC	**37mA**
24 VDC UL Max[1]	45mA

[1] RMS current ratings are per UL average RMS method. UL max current rating is the maximum RMS current within the listed voltage range (16-33VDC for 24VDC units) (8-17VDC for 12VDC units). For strobes the UL max current is usually at the minimum listed voltage (16VDC for 24VDC units) (8VDC for 12VDC units). For audibles the max current is usually at the maximum listed voltage. For unfiltered FWR ratings, see installation manual.

NOTES:

- The AVSM module shipped with back box and cover plate.
- Dimensions of Module: 3.85" (9.78 cm) H x 3.82" (9.70 cm) W x 1.32" (3.35 cm) D
  Dimensions of Box: 5.57"(14.15 cm) H x 4.55" (11.56 cm) W x 2.39" (6.07 cm) D
- A green LED status indicator will flash once every four seconds if zone 1 is operational. The LED will flash twice every four seconds if zones 1 and 2 are operational.
- Strobes should not be used on coded or pulsing signaling circuits. Contact Gentex Corporation at 800-436-8391 or visit www.gentex.com for additional information.

Wiring for Multiple CLASS B Circuit and Use of a Slave Module

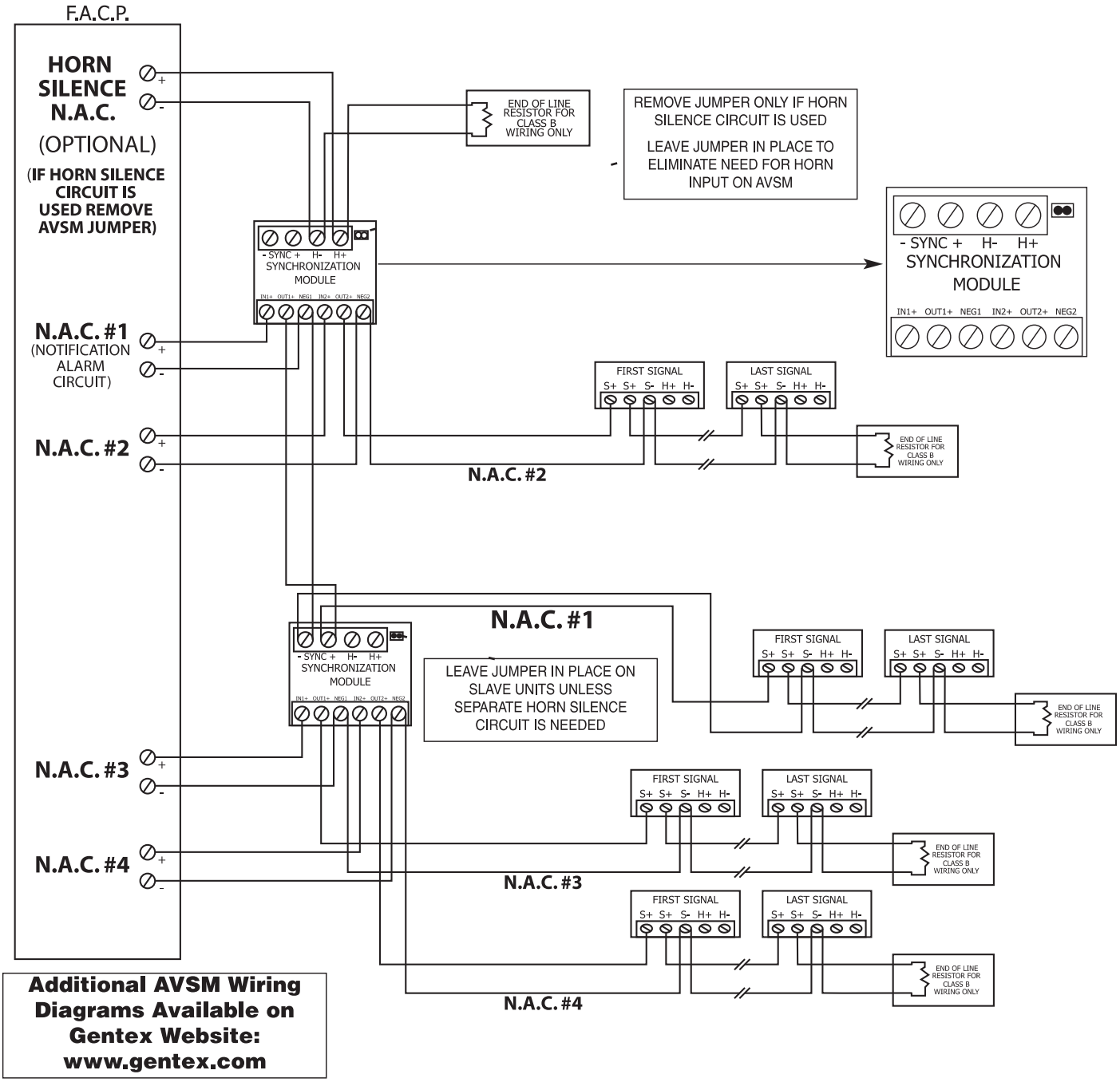

Additional AVSM Wiring Diagrams Available on Gentex Website: www.gentex.com

NOTES:

- CROSSING LINES DO NOT INDICATE CONNECTIONS
- THE AVSM WILL NOT WORK WITH THE ST/HS SERIES
- The incoming positive power lead must be broken and each lead is to be inserted into each of the top two terminals. If two power runs are made to the signal, one for the strobe and one for the horn, only one of the runs must have its positive lead broken and placed under the two separate top terminals. A barrier is provided to prevent both leads from being placed under the same terminal.
- The AVSM module is listed per ANSI/UL 1971 with a voltage range of 8-33VDC/FWR. The AVSM module was tested to the stated voltage range(s); do not apply 80% and 110% of this range for system operation. It is for indoor use only, with a temperature range of 0°C - 49°C (32°F - 120°F) and a maximum humidity of 93% humidity.
- **CAUTION:** The AVSM module is to be connected only to circuits that provide continuously applied voltage. Do not use this module on coded or interrupted circuits in which the voltage is cycled on and off.
- A steady DC power is to be applied, without any other protocol (including temporal 3).

Wiring for synchronized strobes and horns.

Using this method you may:

- Use only two wires to synchronize the temporal horn and strobe with the ability to mute the horn
- Mute the horn **only** when the temporal horn option has been selected.
- Use the Gentex synchronization protocol to provide synchronization and mute the horn, if available.

Wiring for synchronized parallel (unison) horn/strobe operation.

Using this method you may:

- Use four wires where two wires are used to power and synchronize the strobe and two additional wires are used to power and synchronize the horn
- Choose either continuous horn and allow the FACP to control the horn or choose temporal horn and synchronize the horns with the Gentex synchronization protocol.
- Use the Gentex synchronization protocol to provide synchronization and mute the horn, if available.

Wiring for Multiple CLASS B Circuits and Use of Multiple Slave Modules

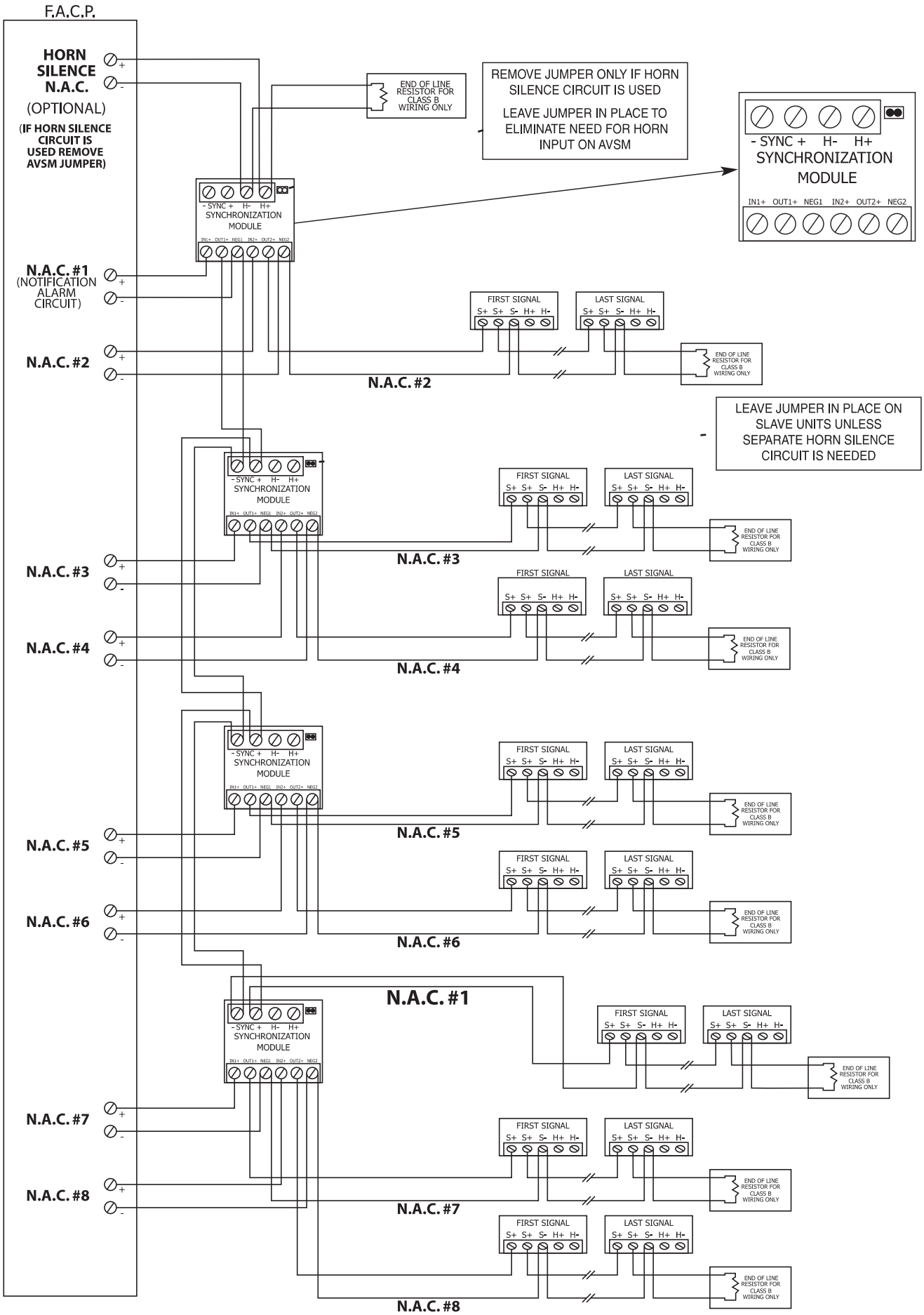

AVSM CONTROL MODULE

Wiring for Multiple CLASS A Circuits and Use of a Slave Module

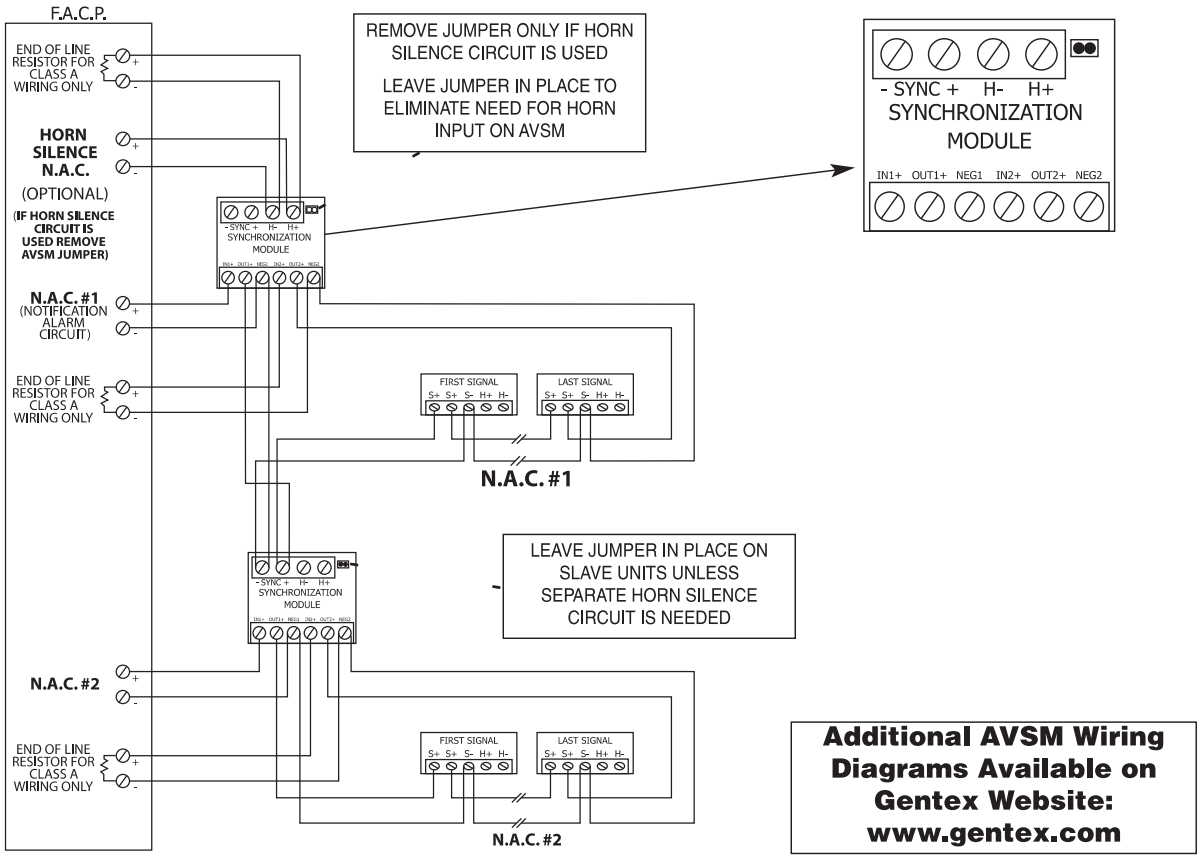

Additional AVSM Wiring Diagrams Available on Gentex Website: www.gentex.com

NOTES:

- **CROSSING LINES DO NOT INDICATE CONNECTIONS**
- **THE AVSM WILL NOT WORK WITH THE ST/HS SERIES**
- The incoming positive power lead must be broken and each lead is to be inserted into each of the top two terminals. If two power runs are made to the signal, one for the strobe and one for the horn, only one of the runs must have its positive lead broken and placed under the two separate top terminals. A barrier is provided to prevent both leads from being placed under the same terminal.
- The AVSM module is listed per ANSI/UL 1971 with a voltage range of 8-33VDC/FWR. The AVSM module was tested to the stated voltage range(s); do not apply 80% and 110% of this range for system operation. It is for indoor use only, with a temperature range of 0°C - 49°C (32°F - 120°F) and a maximum humidity of 93% humidity.
- **CAUTION:** The AVSM module is to be connected only to circuits that provide continuously applied voltage. Do not use this module on coded or interrupted circuits in which the voltage is cycled on and off.
- A steady DC power is to be applied, without any other protocol (including temporal 3).

Wiring for synchronized strobes and horns.
Using this method you may:

- Use only two wires to synchronize the temporal horn and strobe with the ability to mute the horn
- Mute the horn **only** when the temporal horn option has been selected.
- Use the Gentex synchronization protocol to provide synchronization and mute the horn, if available.

Wiring for synchronized parallel (unison) horn/strobe operation.
Using this method you may:

- Use four wires where two wires are used to power and synchronize the strobe and two additional wires are used to power and synchronize the horn
- Choose either continuous horn and allow the FACP to control the horn or choose temporal horn and synchronize the horns with the Gentex synchronization protocol.
- Use the Gentex synchronization protocol to provide synchronization and mute the horn, if available.

GENTEX CORPORATION
Fire Protection Products Group • www.gentex.com
10985 Chicago Drive • Zeeland, Michigan 49464
616.392.7195 • 1.800.436.8391 • 616.392.4219 Fax

Gentex Corporation reserves the right to make changes to the product data sheet at their discretion.

Important Notice:

These materials have been prepared by Gentex Corporation ("Gentex") for informational purposes only, are necessarily summary, and are not purported to serve as legal advice and should not be used as such. Gentex makes no representations and warranties, express or implied, that these materials are complete and accurate, up-to-date, or in compliance with all relevant local, state and federal laws, regulations and rules. The materials do not address all legal considerations as there is inevitable uncertainty regarding interpretation of laws, regulations and rules and the application of such laws, regulations and rules to particular fact patterns. Each person's activities can differently affect the obligations that exist under applicable laws, regulations or rules. Therefore, these materials should be used only for informational purposes and should not be used as a substitute for seeking professional legal advice. Gentex will not be responsible for any action or failure to act in reliance upon the information contained in this material.

551-0031-02

GENTEX CORPORATION

Commander[4] Series Selectable Candela Evacuation Signals

GCS/GCC 24VDC SERIES

Applications

The GCS/GCC Series is a ceiling mount strobe or horn/strobe combination that offers dependable audible and visual alarms and the lowest current consumption.

The GCS/GCC offers tamperproof field selectable candela options of 15, 30, 75, 95, 115 and 150 candela.

The GCC horn offers a continuous or synchable temporal three in 2400Hz and mechanical tone. All tones are easy for the professional to change in the field by using switches. The models are shipped from the factory in the temporal three alarm mode.

The GC Series has a very minimal operating current and has a minimum flash rate of 1Hz regardless of input voltage.

The Commander[4] Series comes standard with the 4" mounting plate which incorporates the popular Super-Slide® feature that allows the installer to easily test for supervision. The product also features a locking mechanism which secures the product to the bracket without any screws showing.

The Commander[4] also features the patented Checkmate® - Instant Voltage Verification feature which allows the installer to check the voltage drop draw without removing the signal.

The GC Series appliances are ANSI/UL 464 and ANSI/UL 1971 listed for use with fire protective systems and are warranted for three years from the date of purchase.

Product Listings

SIGNALING UL LISTED

FM APPROVED

- ANSI/UL 464 and ANSI/UL 1971 Listed
- FM Approved
- CSFM: 7135-0569:122 (GCC)
  7125-0569:123 (GCS)
- MEA: 285-91-E

Patents

- 7,375,617 May 20, 2008

Product Compliance

- NFPA 72
- Americans with Disabilities Act (ADA)
- IBC/IFC/IRC
- City & State ordinances/Laws/Regulations
- Quality Management System is certified to: ISO 9001:2008

NEMA MEMBER

ASSEMBLED IN THE USA

Standard Features

- Nominal voltage 24VDC
- Tamperproof field selectable candela options of 15, 30, 75, 95,115 & 150
- Super-Slide® Bracket - Ease of Supervision Testing
- Checkmate® - Instant Voltage Verification
- Unit Dimensions: 6” (15.24 cm) x 2.6” (6.604 cm)
- Synchronize strobe and/or horn with Gentex AVSM Control Module
- Prewire entire system, install mounting bracket, then install signals
- Documented lower installation and operating costs
- Input Terminals 12 to 18 AWG
- Switch Selection for High or Low dBA
- Switch Selection for 2400Hz or Mechanical Tone
- Switch Selection for Continuous or Temporal 3
- Tamperproof re-entrant grill
- Surface mount with the GCSB (Gentex Ceiling Surface Mount Box)
- Silence audible while visual appliance will remain flashing (for use in accepted jurisdictions)
- Faceplate available in red or off-white

GCS Series 24 Volt Ceiling Mount Selectable Strobe

Model Number	Part Number	Nominal Voltage	Candela
GCS24CR	904-1213-002	24VDC	15, 30, 75, 95, 115, 150
GCS24CW	904-1215-002	24VDC	15, 30, 75, 95, 115, 150
GCS24PCR	904-1214-002	24VDC	15, 30, 75, 95, 115, 150
GCS24PCW	904-1216-002	24VDC	15, 30, 75, 95, 115, 150

GCC Series 24 Volt Ceiling Mount Selectable Horn/Strobe

Model Number	Part Number	Nominal Voltage	Candela	Reverberant dBA @ 10ft. per ANSI/UL 464	In Anechoic Room dBA @ 10ft.
GCC24CR	904-1209-002	24VDC	15, 30, 75, 95, 115, 150	81-86	90
GCC24PCR	904-1210-002	24VDC	15, 30, 75, 95, 115, 150	81-86	90
GCC24CW	904-1211-002	24VDC	15, 30, 75, 95, 115, 150	81-86	90
GCC24PCW	904-1212-002	24VDC	15, 30, 75, 95, 115, 150	81-86	90

Model Designations:
C = Ceiling Mount
R = Red Faceplate W = White Faceplate

All units are available in plain (no lettering).
Plain units are non-returnable.

GC24 Product Strobe Current Ratings (mA)

	Candela	15cd	30cd	75cd	95cd	115cd	150cd
24VDC (16-33 Volts)	24VDC	72mA	101mA	167mA	200mA	214mA	286mA
	UL Max[1]	120mA	120mA	200mA	220mA	290mA	321mA

GCC24 Product Horn Decibel and Current Ratings (mA)

Horn Mode	Minimum dBA @ 10ft. per ANSI/UL 464 (HIGH)	Minimum dBA @ 10ft. per ANSI/UL 464 (LOW)	Regulated 24VDC Max. Operating @ High Setting (mA)
Temp 3 2400Hz	83	75	23
Temp 3 Mechanical	81	73*	22
Continuous 2400Hz	86	78	23
Continuous Mechanical	84	76	22

NOTES:

- Operating temperature: 32°to 120°F (0° to 49°C). The GC Series is not listed for outdoor use.
- The sound output for the temporal 3 tone is rated lower since the time the horn is off is averaged into the sound output rating. While the horn is producing a tone in the temporal 3 mode its sound pressure is the same as the continuous mode.
- For nominal and peak current across UL regulated voltage range for filtered DC power and unfiltered (FWR [Full Wave Rectified]) power, see installation manual.
- Gentex does not recommend using a coded or pulsing signaling circuit with any of our strobe products (see Technical Bulletin Number 014).

* Operating the horn in this mode at this voltage will result in not meeting the minimum ANSI/UL 464 reverberant sound level required for public mode fire protection service. These settings are acceptable only for private mode fire alarm use. Use the high dBA setting for public mode application (not applicable when using the chime tone. The chime tone is always private mode).

[1] RMS current ratings are per UL average RMS method. UL max current rating is the maximum RMS current within the listed voltage range (16-33VDC for 24VDC units). For strobes the UL max current is usually at the minimum listed voltage (16VDC for 24VDC units). For audibles the max current is usually at the maximum listed voltage. For unfiltered FWR ratings, see installation manual.

Mounting Super-Slide®

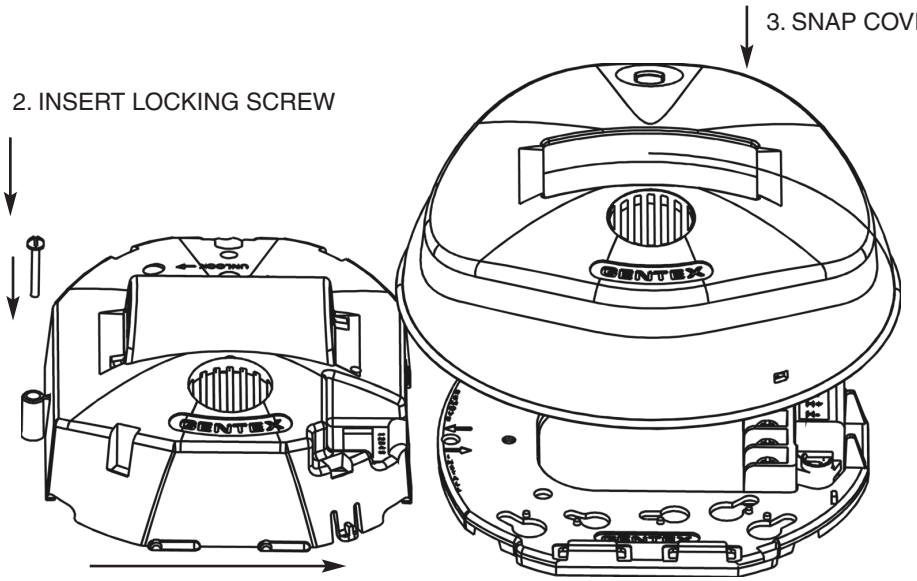

Checkmate® Instant Voltage Verification

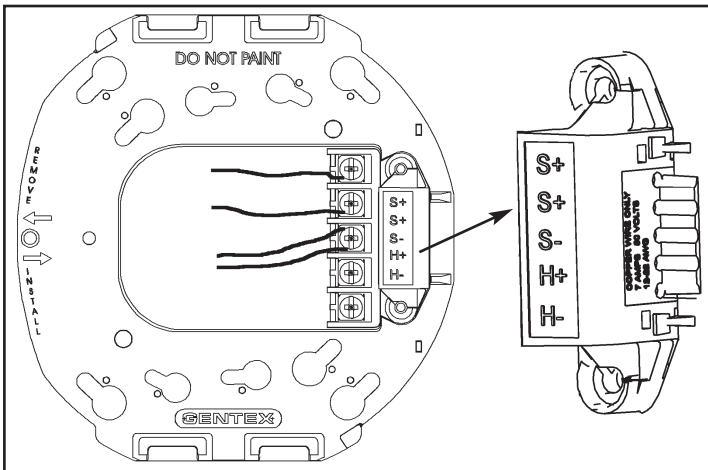

The access holes are provided in the back of the terminal block to allow the voltage to be measured directly without removing the device. Typically this would be done at the end of the line to confirm design criteria. Most measurements will be taken using the S+ and S- locations although access is provided to other locations. *NOTICE:* CARE SHOULD BE TAKEN TO NOT SHORT THE TEST PROBES.

Switch Locations

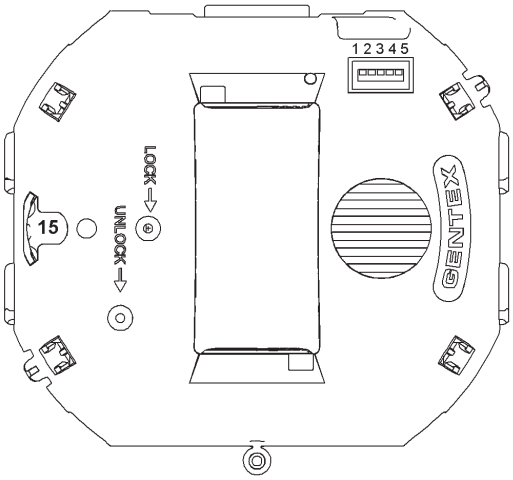

Switch positions 1 and 2 in the down position to select isolated horn and strobe power inputs. Switch 3 selects between temporal or non-temporal tone. Up is temporal. Switch 4 selects between mechanical or high frequency tone. Up is mechanical. Switch 5 selects between high or low dBA. Up is high dBA.

GCS/GCC
24VDC
SERIES

Conventional GC Series Wiring Diagrams

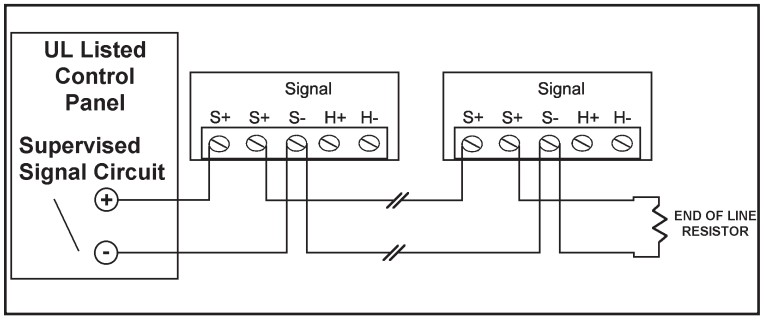

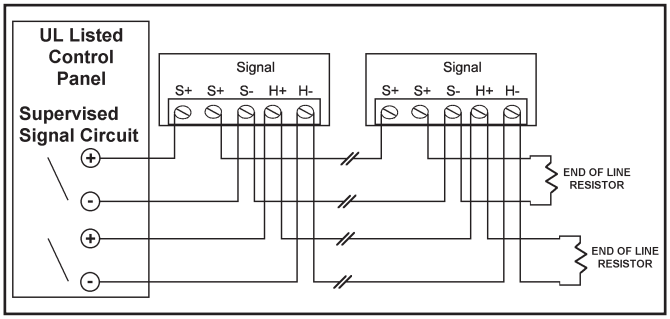

NOTES:

- All strobes are designed to flash as specified with continuous applied voltage. Strobes should not be used on coded or pulsing signaling circuits. However, use of the Gentex AVSM control module or Gentex synchronization protocol is permitted to synchronize the strobe, horn and/or mute the horn. See Technical Bulletin 014 for additional information.
- FOR SYNCHRONIZATION WIRING INFORMATION, REFERENCE AVSM CONTROL MODULE DATA SHEET (551-0031) AND/OR AVSM CONTROL MODULE MANUAL (550-0284) FOR SYNCHRONIZATION MODULE WIRING DIAGRAMS. AVSM CONTROL MODULE DATA SHEET AND MANUAL CAN BE OBTAINED AT http://www.gentex.com OR CALL GENTEX CORPORATION AT 1-800-436-8391.

Architect & Engineering Specifications

The visible and audible/visible signal shall be Gentex model GCS or GCC or approved equal and shall be listed by Underwriters Laboratories Inc. per ANSI/UL 1971 for the GCS and ANSI/UL 464 for the GCC. The notification appliance shall also be listed with the California State Fire Marshal (CSFM) and the Bureau of Standards and Appeals (NYC).

The notification appliance (combination audible/visible units and audible units only) shall produce a peak sound output of 90dBA or greater as measured at 24VDC in an anechoic chamber. The signaling appliance shall also have the capability to silence the audible signal while leaving the visible signal energized with the use of a single pair of power wires. Additionally, the user shall be able to select either continuous or temporal tone output with the temporal signal having the ability to be synchronized.

The audible/visible and visible signaling appliance shall also maintain a minimum flash rate of 1Hz or up to 2Hz regardless of power input voltage. The appliance shall have an operating current of 72mA or less at 24VDC for the 15 candela strobe circuit.

The appliance shall be polarized to allow for electrical supervision of the system wiring. The unit shall be provided with a mounting bracket with terminals with barriers for input/output wiring and be able to mount to a single gang or double gang box or double workbox with the use of an adapter plate. The unit shall have an input voltage range of 16-33 volts with either direct current or full wave rectified power.

The appliance shall be capable of test supervision without disconnecting wires, verify voltage without removing unit and be capable of mounting to a surface back box.

24 units per carton
29 pounds per carton

GENTEX CORPORATION
Fire Protection Products Group • www.gentex.com
10985 Chicago Drive • Zeeland, Michigan 49464
616.392.7195 • 1.800.436.8391 • 616.392.4219 Fax

Gentex Corporation reserves the right to make changes to the product data sheet at their discretion.

Important Notice:

These materials have been prepared by Gentex Corporation ("Gentex") for informational purposes only, are necessarily summary, and are not purported to serve as legal advice and should not be used as such. Gentex makes no representations and warranties, express or implied, that these materials are complete and accurate, up-to-date, or in compliance with all relevant local, state and federal laws, regulations and rules. The materials do not address all legal considerations as there is inevitable uncertainty regarding interpretation of laws, regulations and rules and the application of such laws, regulations and rules to particular fact patterns. Each person's activities can differently affect the obligations that exist under applicable laws, regulations or rules. Therefore, these materials should be used only for informational purposes and should not be used as a substitute for seeking professional legal advice. Gentex will not be responsible for any action or failure to act in reliance upon the information contained in this material.

551-0051-06

GENTEX CORPORATION

Commander² Series Low Frequency Evacuation Signals

GEC/GES/GEH 24 VDC SERIES

Applications

The Commander² Series is a low profile strobe, horn or horn/strobe combination that offers dependable audible and audible/visual alarms and the absolute lowest current available.

The GE Series is available in fixed candela options of 15/75 and 177.

The Commander² Series horn offers a continuous or synchable temporal three in 2400Hz and mechanical tone, a chime and whoop tone. All tones are easy for the professional to change in the field by using switches.

The GE Series has a minimal operation current and has a minimum flash rate of 1Hz regardless of input voltage.

The Commander² Series is shipped with the standard 4" mounting plate which incorporates the popular Super-Slide® feature that allows the installer to easily test for supervision. The product also features a locking mechanism which secures the product to the bracket without any screws showing.

The Commander² Series also features the patented Checkmate® - Instant Voltage Verification feature which allows the installer to check the voltage drop draw and match it to the blueprint.

The GE Series appliances are ANSI/UL 464, ANSI/UL 1971 and/or ANSI/UL 1638 listed for use with fire protective systems and are warranted for three years from date of purchase.

Standard Features

- Nominal voltage 24VDC
- Fixed candela options of 15/75 and 177
- GEH horn is available in 12VDC or 24VDC
- Super-Slide® Bracket - ease of supervision testing
- Checkmate® - instant voltage verification
- Unit Dimensions: 5” (12.7 cm) high x 4.5” (11.43 cm) wide x 2.5” (6.35 cm) deep
- Synchronize strobe and/or horn with Gentex AVSM Control Module
- Prewire entire system, install mounting bracket, then install signals
- Documented lower installation and operating costs
- Input terminals 12 to 18 AWG
- Switch selection for high or low dBA
- Switch for chime, whoop, mechanical and 2400Hz tone
- Switch for continuous or temporal 3 (not available on whoop tone)
- Tamperproof re-entrant grill
- Surface mount with the GSB (Gentex Surface Mount Box)
- Silence horn while strobes remain flashing
- Faceplate available in red or off-white

Product Listings

SIGNALING UL LISTED

- ANSI/UL 464, ANSI/UL 1971 and/or ANSI/UL 1638 Listed
- CSFM: 7135-0569:122 (GEH-24 & GEC-24)
  7125-0569:123 (GES-24)
  7135-0569: 130 (GEH-12)
- MEA: 285-91-E-XV

Patents

- 7,375,617 May 20, 2008

Product Compliance

- NFPA 72
- Americans with Disabilities Act (ADA)
- IBC/IFC/IRC
- City & State Ordinances/Laws/Regulations
- Quality Management System is certified to: ISO 9001:2008

NEMA MEMBER

ASSEMBLED IN THE USA

GEH 12VDC and 24VDC Low Profile Evacuation Horn

Model Number	Part Number	Nominal Voltage	Reverberant dBA @ 10ft., per ANSI/UL 464	In Anechoic Room dBA @ 10ft.
GEH12-R	904-1239-002	12 VDC	70-82	100
GEH12-W	904-1241-002	12 VDC	70-82	100
GEH24-R	904-1205-002	24 VDC	70-82	100
GEH24-W	904-1207-002	24 VDC	70-82	100

GES 24 VDC Low Profile Evacuation Strobe

Model Number	Part Number	Nominal Voltage	Strobe Candela
GES24-177WR	904-1183-002	24 VDC	177
GES24-177WW	904-1203-002	24 VDC	177
GES24-15/75WR	904-1167-002	24 VDC	15 (ANSI/UL 1971) / 75 (ANSI/UL 1638)
GES24-15/75WW	904-1187-002	24 VDC	15 (ANSI/UL 1971) / 75 (ANSI/UL 1638)

Model Designations:
W = Wall mount
R = Red Faceplate W = White Faceplate

All units are available in plain (no lettering).
Plain units are non-returnable.

ALERT bezel available AGENT bezel available

GEC 24VDC Fixed Candela, Low Profile Evacuation Horn/Strobe

Model Number	Part Number	Nominal Voltage	Strobe Candela	Reverberant dBA @ 10ft., per ANSI/UL 464	In Anechoic Room dBA @ 10ft.
GEC24-177WR	904-1143-002	24 VDC	177	70-82	100
GEC24-177WW	904-1163-002	24 VDC	177	70-82	100
GEC24-15/75WR	904-1127-002	24 VDC	15 (ANSI/UL 1971) / 75 (ANSI/UL1638)	70-82	100
GEC24-15/75WW	904-1147-002	24 VDC	15 (ANSI/UL 1971) / 75 (ANSI/UL 1638)	70-82	100

GE-24 Product Strobe Current Ratings (mA)

	24VDC (16-33 Volts)	
Candela	**24VDC**	UL Max[1]
15/75cd	**63mA**	67mA
177cd	**96mA**	213mA

GEH-12 Product Horn Decibel and Current Ratings			
Horn Mode	Minimum dBA @ 10ft. per ANSI/UL 464 (HIGH)	Minimum dBA @ 10ft. per ANSI/UL 464 (LOW)	Regulated 12VDC Max. Operating @ High Setting (mA)
Temp 3 2400Hz	76	69*	29
Temp 3 Mechanical	75	68*	26
Temp 3 Chime	62*	60*	13
Continuous 2400Hz	79	74*	29
Continuous Mechanical	78	72*	26
Continuous Chime	63*	61*	13
Whoop	78	71*	55

GE-24 Product Horn Decibel and Current Ratings			
Horn Mode	Minimum dBA @ 10ft. per ANSI/UL 464 (HIGH)	Minimum dBA @ 10ft. per ANSI/UL 464 (LOW)	Regulated 24VDC Max. Operating @ High Setting (mA)
Temp 3 2400Hz	78	71*	28
Temp 3 Mechanical	76	70*	25
Temp 3 Chime	70*	66*	15
Continuous 2400Hz	81	74*	28
Continuous Mechanical	80	72*	25
Continuous Chime	70*	66*	15
Whoop	82	69*	56

NOTES:

- Operating temperature: 32°to 120°F (0° to 49°C). The GE Series is not listed for outdoor use.

  The sound output for the temporal 3 tone is rated lower since the time the horn is off is averaged into the sound output rating. While the horn is producing a tone in the temporal 3 mode its sound pressure is the same as the continuous mode.
- For nominal and peak current across UL regulated voltage range for filtered DC power and unfiltered (FWR [Full Wave Rectified]) power, see installation manual. 12VDC models are DC only.

* Operating the horn in this mode at this voltage will result in not meeting the minimum ANSI/UL 464 reverberant sound level required for public mode fire protection service. These settings are acceptable only for private mode fire alarm use. Use the high dBA setting for public mode application (not applicable when using the chime tone. The chime tone is always private mode).

[1] RMS current ratings are per UL average RMS method. UL max current rating is the maximum RMS current within the listed voltage range (16-33VDC for 24VDC units) (8-17VDC for 12VDC units). For strobes the UL max current is usually at the minimum listed voltage (16VDC for 24VDC units) (8VDC for 12VDC units). For audibles the max current is usually at the maximum listed voltage. For unfiltered FWR ratings, see installation manual.

Tone Switch Locations

TONE	SWITCH POSITION		
	3	4	5
Mechanical Temporal 3	ON	ON	ON
Mechanical - Continuous	OFF	ON	ON
2400Hz - Temporal 3	ON	OFF	ON
2400Hz - Continuous	OFF	OFF	ON
Chime - Temporal 3	ON	ON	OFF
Chime - Continuous	OFF	ON	OFF
Whoop	ON	OFF	OFF
Whoop	OFF	OFF	OFF

NOTE:
- Switch Positions 1 and 2 in the OFF position to select isolated horn and strobe power inputs
- Switch Position 6 ON = HIGH dBA
- Switch Position 6 OFF = LOW dBA

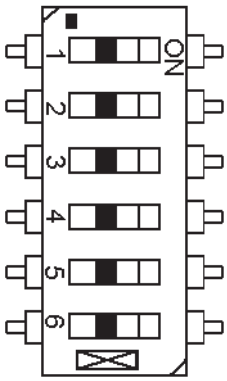

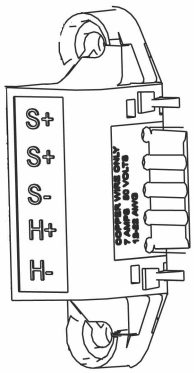

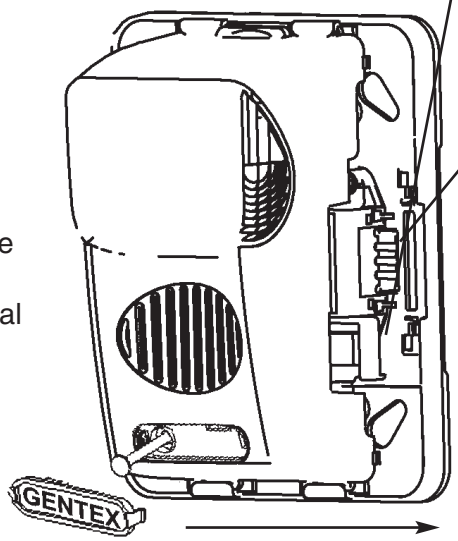

Gentex Super-Slide® Mounting Bracket

Allows the installer to pre-wire the system, test for system supervision, remove the signal head until occupancy, switch out Gentex signals without changing mounting brackets and has locking edge connector for snap-in-place installation.

Gentex Checkmate® Instant Voltage Verification

It is often necessary to confirm the voltage drop along a line of devices. The access holes are provided in the back of the terminal block to allow the voltage to be measured directly without removing the device. Typically this would be done at the end of the line to confirm design criteria. Most measurements will be taken using the S+ and S- locations although access is provided to other locations.

NOTE: Care should be taken to not short the test probes.

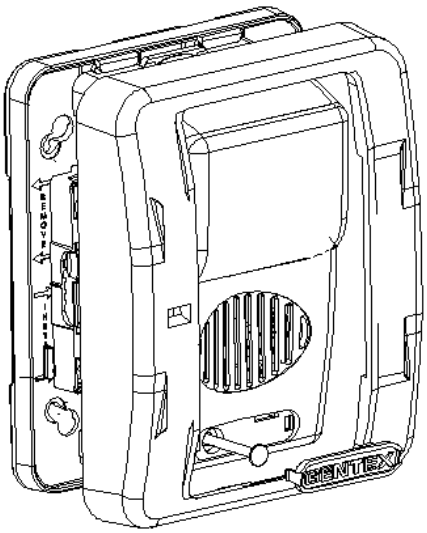

To remove bezel, grip both sides of bezel and pull in a downward and outward motion.

GEC/GES/GEH 24 VDC SERIES

Conventional GES/GEC Series Wiring Diagrams

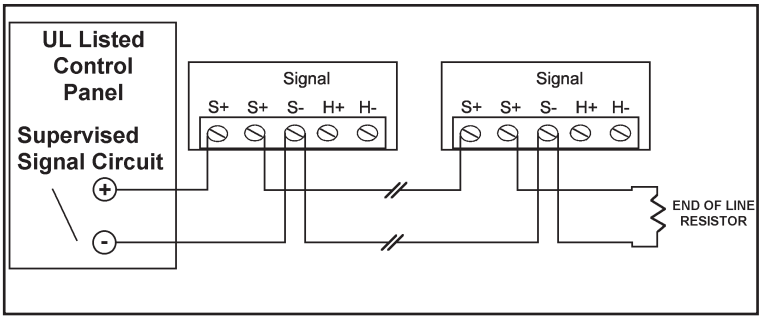

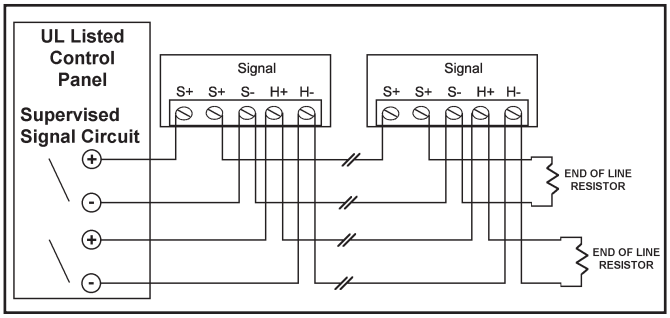

NOTES:

- All strobes are designed to flash as specified with continuous applied voltage. Strobes should not be used on coded or pulsing signaling circuits. However, use of the Gentex AVSM control module or Gentex synchronization protocol is permitted to synchronize the strobe, horn and/or mute the horn. See Technical Bulletin 014 for additional information.
- FOR SYNCHRONIZATION WIRING INFORMATION, REFERENCE AVSM CONTROL MODULE DATA SHEET (551-0031) AND/OR AVSM CONTROL MODULE MANUAL (550-0284) FOR SYNCHRONIZATION MODULE WIRING DIAGRAMS. AVSM CONTROL MODULE DATA SHEET AND MANUAL CAN BE OBTAINED AT http://www.gentex.com OR CALL GENTEX CORPORATION AT 1-800-436-8391.
- When synchronizing the GEH 12VDC Series, the Gentex AVSM control module or Gentex synchronization protocol MUST be used.

Architect & Engineering Specifications

The audible and/or visible signal shall be Gentex GE Series or approved equal and shall be listed by Underwriters Laboratories Inc. per ANSI/UL 1971, ANSI/UL 1638 and/or ANSI/UL 464. The notification appliance shall also be listed with the California State Fire Marshal (CSFM) and the Bureau of Standards and Appeals (NYC).

The notification appliance (combination audible/visible and audible units only) shall produce a peak sound output of 100dBA or greater at 12VDC or 24VDC as measured in an anechoic chamber. The signaling appliance shall also have the capability to silence the audible signal while leaving the visible signal energized with the use of a single pair of power wires. Additionally, the user shall be able to select either continuous or temporal tone output with the temporal signal having the ability to be synchronized.

The audible/visible and visible signaling appliance shall also maintain a minimum flash rate of 1Hz or up to 2Hz regardless of power input voltage. The appliance shall also be capable of meeting the candela requirements of the ADA (75Cd) for the combination listed (UL 1971/UL 1638) listed models. The appliance shall have an operating current of 67mA or less at 24 VDC for the 15/75Cd for the strobe circuit.

The appliance shall be polarized to allow for electrical supervision of the system wiring. The unit shall be provided with a mounting bracket with terminals with barriers for input/output wiring and be able to mount to a single gang or double gang box or double workbox without the use of an adapter plate. The unit shall have an input voltage range of 16-33 volts with either direct current of full wave rectified power.

The appliance shall be capable of test supervision without disconnecting wires, verify voltage without removing unit and be capable of mounting to a surface back box.

24 units per carton
27 pounds per carton

GENTEX CORPORATION
Fire Protection Products Group • www.gentex.com
10985 Chicago Drive • Zeeland, Michigan 49464
616.392.7195 • 1.800.436.8391 • 616.392.4219 Fax

Gentex Corporation reserves the right to make changes to the product data sheet at their discretion.

Important Notice:

These materials have been prepared by Gentex Corporation ("Gentex") for informational purposes only, are necessarily summary, and are not purported to serve as legal advice and should not be used as such. Gentex makes no representations and warranties, express or implied, that these materials are complete and accurate, up-to-date, or in compliance with all relevant local, state and federal laws, regulations and rules. The materials do not address all legal considerations as there is inevitable uncertainty regarding interpretation of laws, regulations and rules and the application of such laws, regulations and rules to particular fact patterns. Each person's activities can differently affect the obligations that exist under applicable laws, regulations or rules. Therefore, these materials should be used only for informational purposes and should not be used as a substitute for seeking professional legal advice. Gentex will not be responsible for any action or failure to act in reliance upon the information contained in this material.

551-0049-02