Fire Alarm Symbol Legend

SYMBOL	DESCRIPTION	PART NUMBER	MODEL	QUANTITY	USER TEXT	UL	FM
	HORN/STROBE, 2 WIRE, M-C, RED, WALL	GEC3-24WR	GEC3-24WR	7	EX	464, 1971	Approved
	HORN/STROBE, 2 WIRE, M-C, RED, CEILING	GCC24-CR	GCC24CR	1	EX	464, 1971	Approved
	HORN, PLAIN, RED	GEH24-PR	GEH24-PR	1		464	N/A
30CD	HORN/STROBE, 2 WIRE, M-C, RED, CEILING	GCC24-CR	GCC24CR	4		464, 1971	Approved
75CD	HORN/STROBE, 2 WIRE, M-C, RED, CEILING	GCC24-CR	GCC24CR	1		464, 1971	Approved
15CD	STROBE, M-C, RED, CEILING	GCS24CR	GCS24CR	3		464, 1971	Approved
30CD	STROBE, M-C, RED, CEILING	GCS24CR	GCS24CR	1		464, 1971	Approved
EOL 4.7K Ω	END OF LINE RESISTOR	EOL	EOL	2			
15CD	HORN/STROBE, 2 WIRE, M-C, RED, CEILING	GCC24-CR	GCC24CR	4		464, 1971	Approved

Circuit Calculations Panel: P3 Card: 02 Circuit:SIG2

CircuitName: SIG2
Circuit Type: Notification Terminal Voltage: 20.4V:DC Amperage: 2.0000A
Cable: 14/2 SOL JKT FPLP 1M RL RED #14
Calculations based on Running Total Length.
Design Criteria: Ambient temperature: 167°F Max. operating voltage drop: 10%

Device	Part No	Appliance Desc	Distance	Current	Voltage	Voltage Drop
	5495	Panel			20.4V	
1	GCS24CR	STROBE, M-C, RED, CEILING, 30CD	28'-0	120.0000mA	20.226V	(0.174V)
2	GCS24CR	STROBE, M-C, RED, CEILING, 15CD	72'-0	120.0000mA	19.8317V	(0.3943V)
3	GCC24-CR	HORN/STROBE, 2 WIRE, M-C, RED, CEILING, 30CD	18'-0	143.0000mA	19.7464V	(0.0853V)
4	GCS24CR	STROBE, M-C, RED, CEILING, 15CD	27'-0	120.0000mA	19.6421V	(0.1043V)
5	GCC24-CR	HORN/STROBE, 2 WIRE, M-C, RED, CEILING, 75CD	26'-0	223.0000mA	19.5608V	(0.0813V)
6	GCC24-CR	HORN/STROBE, 2 WIRE, M-C, RED, CEILING, 30CD	40'-0	143.0000mA	19.4906V	(0.0702V)
7	GCC24-CR	HORN/STROBE, 2 WIRE, M-C, RED, CEILING, 30CD	33'-0	143.0000mA	19.4616V	(0.029V)
7	EOL	END OF LINE RESISTOR	4'-0	0.0000mA	19.4616V	(0V)
			248'-0	1012.0000mA		

Total Current: 1012.0000mA
(Total VDrop Percent:4.60%) Total Voltage Drop : 0.9384V

Circuit Calculations Panel: P3 Card: 02 Circuit:SIG3

CircuitName: SIG3
Circuit Type: Notification Terminal Voltage: 20.4V:DC Amperage: 2.0000A
Cable: 14/2 SOL JKT FPLP 1M RL RED #14
Calculations based on Running Total Length.
Design Criteria: Ambient temperature: 167°F Max. operating voltage drop: 10%

Device	Part No	Appliance Desc	Distance	Current	Voltage	Voltage Drop
	5495	Panel			20.4V	
1	GCS24CR	STROBE, M-C, RED, CEILING, 15CD	83'-0	120.0000mA	19.9745V	(0.4255V)
2	GCC24-CR	HORN/STROBE, 2 WIRE, M-C, RED, CEILING, 30CD	18'-0	143.0000mA	19.8954V	(0.079V)
3	GCC24-CR	HORN/STROBE, 2 WIRE, M-C, RED, CEILING, 15CD	22'-0	143.0000mA	19.8182V	(0.0773V)
4	GCC24-CR	HORN/STROBE, 2 WIRE, M-C, RED, CEILING, 15CD	21'-0	143.0000mA	19.7629V	(0.0553V)
5	GCC24-CR	HORN/STROBE, 2 WIRE, M-C, RED, CEILING, 15CD	43'-0	143.0000mA	19.6874V	(0.0755V)
6	GCC24-CR	HORN/STROBE, 2 WIRE, M-C, RED, CEILING, 15CD	32'-0	143.0000mA	19.6593V	(0.0281V)
6	EOL	END OF LINE RESISTOR	6'-0	0.0000mA	19.6593V	(0V)
			225'-0	835.0000mA		

Total Current: 835.0000mA
(Total VDrop Percent:3.63%) Total Voltage Drop : 0.7407V

Battery Calculations for Panel: P3: EX

Part No:5495 - 6 AMP NAC POWER SUPPLY W/SYNCH

Part No.	Qty.	Description	Standby	Total Standby	Alarm	Total Alarm
		Panel Equipment				
	1		0.0000mA	0.0000mA	0.0000mA	0.0000mA
			Total Panel Stby	0.0000mA	Total Panel Alarm	0.0000mA
		Peripheral Devices				
GCC24-CR	8	HORN/STROBE, 2 WIRE, M-C, RED, CEILING (Notification)	0.0000mA	0.0000mA	143.0000mA	1144.0000mA
GCC24-CR	1	HORN/STROBE, 2 WIRE, M-C, RED, CEILING (Notification)	0.0000mA	0.0000mA	223.0000mA	223.0000mA
GCS24CR	4	STROBE, M-C, RED, CEILING (Notification)	0.0000mA	0.0000mA	120.0000mA	480.0000mA
EOL	2	END OF LINE RESISTOR (Notification)	0.0000mA	0.0000mA	0.0000mA	0.0000mA
			Total Peripheral Stby	0.0000mA	Total Periph Alarm	1847.0000mA
			Total Standby Amps	0.0000mA	Total Alarm Amps	1847.0000mA

Standby time: 24 Hrs 0Ah
Alarm time: 5 Min 0.154Ah
Battery requirement: 0.154Ah
Compensation Factors - Standby: 1.2 Alarm: 1.2 Requirement with compensation: 0.185Ah

GENERAL NOTES / SCOPE OF WORK

1. SYSTEM WIRING NOTED ON THE DRAWINGS IS PER MANUFACTURE AND CODE REQUIREMENTS. AND ALTERATION TO SYSTEM WIRING, WITHOUT APPROVAL, IS AT CONTRACTOR'S OWN RISK!!

2. SYSTEM WIRING SHOWN ON DRAWINGS IS DIAGRAMMATIC AND ONLY USED FOR REFERENCE PURPOSES. ACTUAL WIRE AND DEVICE INSULATION MAY VARY DUE TO OBSTRUCTIONS.

3. WIRE SHOWN IN THIS DRAWING SET IS PERMITTED IN RACEWAYS LEADING TO FIRE PROTECTION EQUIPMENT. OTHER WIRE SHALL NOT BE PERMITTED IN THE SAME RACEWAY.

4. FIRE ALARM SYSTEM INSTALLATION SHALL CONFORM WITH THE LATEST U.L., N.E.C., N.F.P.A., W.A.C., AND OTHER STANDARDS AS APPLICABLE TO THE CITY STANDARDS.

5. WHEN NECESSARY, DUE TO CHANGING DESIGN REQUIREMENTS, FACTORY AVAILABILITY, ETC. FIRE SYSTEMS WEST RESERVES THE RIGHT TO SUBSTITUTE EQUIPMENT HEREIN MENTIONED OR SPECIFIED, WITH EQUIPMENT OF EQUAL OR BETTER QUALITY, FUNCTION AND DESIGN.

6. PARALLEL BRANCHING (T-TAPPING) OF WIRE TO ALL NOTIFICATION APPLIANCE CIRCUITS SHALL NOT BE PERMITTED.

7. PARALLEL BRANCHING (T-TAPPING) OF WIRE TO ANALOG INITIATING DEVICE CIRCUITS IS PERMISSIBLE.

8. THIS SPACE IS EQUIPPED WITH AN AUTOMATIC FIRE SPRINKLER SYSTEM.

9. FIRE SYSTEMS WEST WILL BE ADD OR RELOCATING FIRE ALARM NOTIFICATION DEVICE PER TENANT IMPROVEMENT.

FIRE ALARM SYSTEM INFORMATION INSTALLER/SUPPLIER

SITE CONTACT:	DESIGN/SUPPLIER:
TALON	FIRE SYSTEMS WEST, INC.
401 PARKPLACE CENTER	206 FRONTAGE ROAD NORTH, STE C
KIRKLAND, WA 98033	PACIFIC, WASHINGTON 98047
PHONE:	PHONE: (253) 833-1248
FAX:	FAX: (253) 735-0113
WA ST LICENSE: FIRESWI140B1	WA ST LICENSE: FIRESWI055LW

DESIGNER
MATT CARLMAN
FIRE SYSTEMS WEST, INC
206 FRONTAGE ROAD NORTH, STE C
PACIFIC, WASHINGTON 98047
PHONE: (253) 833-1248
FAX: (253) 735-0113

X ____________

FOR FIRE DEPARTMENT USE ONLY

A	14/2 FPLP
B	16/2 FPLP
EX	EXISTING LOCATION (SWAP FOR NEW DEVICE)
WP	WEATHER PROOF
N	NEW DEVICE
R	RELOCATE

• STROBE COVERAGE AREA SHALL BE DEFINED AS:

10 FT. CLG. HT.	20 FT. CLG. HT.	30 FT. CLG. HT.
15 cd = 20'x20'	30 cd = 20'x20'	75 cd = 20'x20'
30 cd = 30'x30'	75 cd = 30'x30'	95 cd = 30'x30'
75 cd = 40'x40'	95 cd = 40'x40'	110 cd = 40'x40'
95 cd = 50'x50'	110 cd = 50'x50'	115 cd = 50'x50'

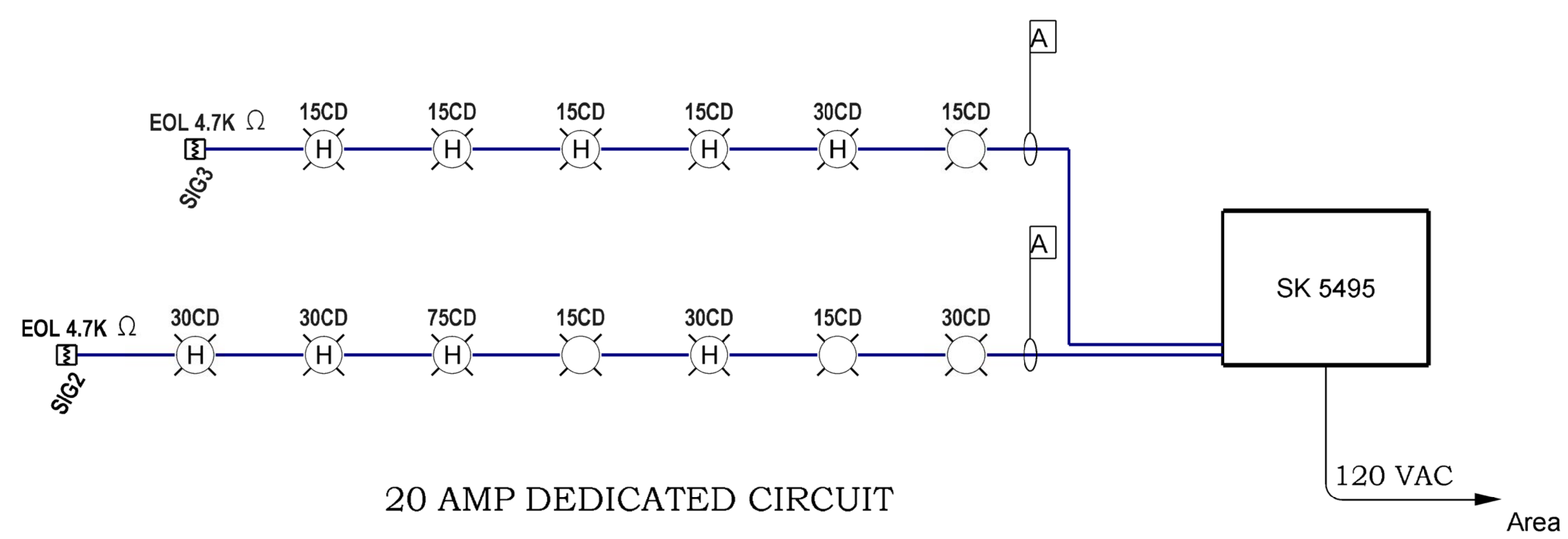

WIRE DIAGRAM

FIRE ALARM SYSTEM OPERATIONAL MATRIX

CAUSE	ALARM AT FACP	ALARM AT ANNUNCIATOR	ALARM AT OFF SITE REPORTING	ACTIVATE ALL AUDIBLES	ACTIVATE VISUALS	TROUBLE AT FACP	TROUBLE AT ANNUNCIATOR	TROUBLE AT OFF SITE REPORTING	SUPERVISORY AT FACP	SUPERVISORY AT ANNUCIATOR	SUPERVISORY AT OFF SITE REPORTING	DEACTIVATE AUDIBLES	DEACTIVATE VISUALS	SYSTEM NORMAL	REMARKS
SMOKE / HEAT DETECTORS	●	●	●	●	●										
MANUAL PULL STATION	●	●	●	●	●										
SYSTEM RESET														●	
SIGNAL SILENCE												●	●		
AC POWER FAILURE						●	●	●							
FIRE ALARM TROUBLE (OPEN, SHORTS, OR GROUNDS) ON INITIATION OR SIGNALING CIRCUITS						●	●	●							
TAMPER SWITCHES									●	●	●				
WATERFLOW SWITCH	●	●	●	●	●										

Must Remain On Site

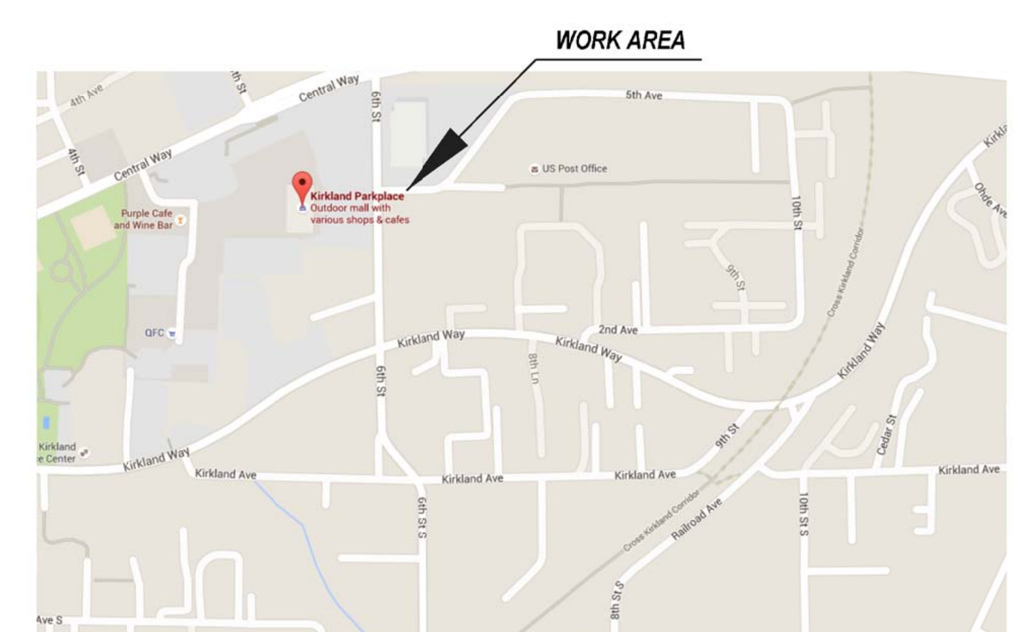

VICINITY MAP

SCALE: N.T.S.

Lt. Chappell 04/14/2016
MOΛΩN ΛABE

Fire Systems West
206 FRONTAGE ROAD NORTH, SUITE C
PACIFIC, WASHINGTON 98047
(253) 833-1248 Fax: (253) 735-0113
WA CL# FIRESWI 140B1 WA ECL# FIRESWI 055LW

NO.	REVISIONS	DATE	BY	CHK
1	ISSUED_FOR_REVIEW	04/11/2016	MWC	PL

NEW DEVICE COUNT

SYM	TYPE	MFG	MODEL	FINISH	QUANITY
	CEILING HORN STROBE	SYSTEM SENSOR	PC2W	WHITE	0
WP	OUTDOOR WALL HORN STROBE	SYSTEM SENSOR	P2RK	WHITE	0
	WALL HORN STROBE	SYSTEM SENSOR	P2R	WHITE	0
	WALL STROBE	SYSTEM SENSOR	SW	WHITE	0
	PULL STATION	GAMEWELL FCI	MS-7 SERIES	RED	0
S	SMOKE SENSORS	GAMEWELL FCI	ASD-PL2F	WHITE	0
	HEAT SENSORS	GAMEWELL FCI	ATD-L2F	WHITE	0
MH	MINI HORNS	GAMEWELL FCI	MHW	WHITE	0
				TOTAL	0

TALON FIRE ALARM PLAN

CONTRACT NAME:
TALON
401 PARKPLACE CENTER
KIRKLAND, WA 98033

CONTRACT WITH:
PRIDE ELECTRIC
18133 NE 68TH ST
SUITE D-120

ON-SITE CONTACT: JUSTIN BRANSON 425-736-2407

PROJECT: 8-17-0224
DATE: 04/11/2016
SCALE: 1/8" = 1'-0"
SHEET: FA-01

-- FILE:Talon Fire Alarm Plan.cad DATE:04/11/16 TIME:09:59:07 --

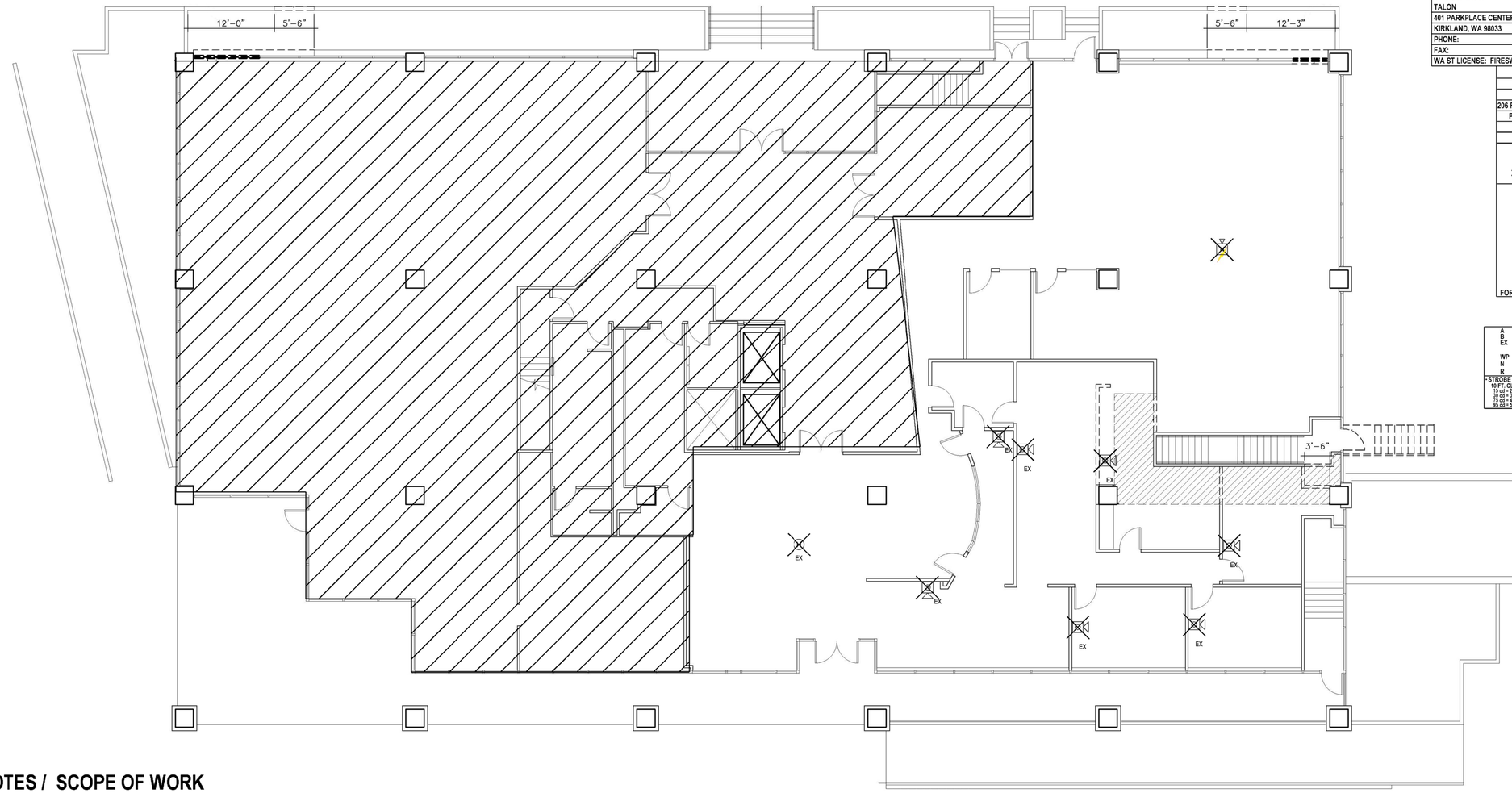

FIRE ALARM SYSTEM INFORMATION INSTALLER/SUPPLIER	
SITE CONTACT:	DESIGN/SUPPLIER:
TALON	FIRE SYSTEMS WEST, INC.
401 PARKPLACE CENTER	206 FRONTAGE ROAD NORTH, STE C
KIRKLAND, WA 98033	PACIFIC, WASHINGTON 98047
PHONE:	PHONE: (253) 833-1248
FAX:	FAX: (253) 735-0113
WA ST LICENSE: FIRESWI140B1	WA ST LICENSE: FIRESWI055LW

DESIGNER
MATT CARLMAN
FIRE SYSTEMS WEST, INC
206 FRONTAGE ROAD NORTH, STE C
PACIFIC, WASHINGTON 98047
PHONE: (253) 833-1248
FAX: (253) 735-0113
X
FOR FIRE DEPARTMENT USE ONLY

A	14/2 FPLP
B	18/2 FPLP
EX	EXISTING LOCATION (SWAP FOR NEW DEVICE)
WP	WEATHER PROOF
N	NEW DEVICE
R	RELOCATE

•STROBE COVERAGE AREA SHALL BE DEFINED AS:

10 FT. CLG. HT.	20 FT. CLG. HT.	30 FT. CLG. HT.
15 cd = 20'x20'	70 cd = 20'x20'	73 cd = 20'x20'
20 cd = 30'x30'	75 cd = 30'x30'	95 cd = 30'x30'
75 cd = 40'x40'	95 cd = 40'x40'	115 cd = 40'x40'
95 cd = 50'x50'	110 cd = 50'x50'	115 cd = 50'x50'

GENERAL NOTES / SCOPE OF WORK

1. SYSTEM WIRING NOTED ON THE DRAWINGS IS PER MANUFACTURE AND CODE REQUIREMENTS. AND ALTERATION TO SYSTEM WIRING, WITHOUT APPROVAL, IS AT CONTRACTOR'S OWN RISK!!

2. SYSTEM WIRING SHOWN ON DRAWINGS IS DIAGRAMMATIC AND ONLY USED FOR REFERENCE PURPOSES. ACTUAL WIRE AND DEVICE INSULATION MAY VARY DUE TO OBSTRUCTIONS.

3. WIRE SHOWN IN THIS DRAWING SET IS PERMITTED IN RACEWAYS LEADING TO FIRE PROTECTION EQUIPMENT. OTHER WIRE SHALL NOT BE PERMITTED IN THE SAME RACEWAY.

4. FIRE ALARM SYSTEM INSTALLATION SHALL CONFORM WITH THE LATEST U.L., N.E.C., N.F.P.A., W.A.C., AND OTHER STANDARDS AS APPLICABLE TO THE CITY STANDARDS.

5. WHEN NECESSARY, DUE TO CHANGING DESIGN REQUIREMENTS, FACTORY AVAILABILITY, ETC. FIRE SYSTEMS WEST RESERVES THE RIGHT TO SUBSTITUTE EQUIPMENT HEREIN MENTIONED OR SPECIFIED, WITH EQUIPMENT OF EQUAL OR BETTER QUALITY, FUNCTION AND DESIGN.

6. PARALLEL BRANCHING (T-TAPPING) OF WIRE TO ALL NOTIFICATION APPLIANCE CIRCUITS SHALL NOT BE PERMITTED.

7. PARALLEL BRANCHING (T-TAPPING) OF WIRE TO ANALOG INITIATING DEVICE CIRCUITS IS PERMISSIBLE.

8. THIS SPACE IS EQUIPPED WITH AN AUTOMATIC FIRE SPRINKLER SYSTEM.

10. EXISTING FIRE ALARM CONTROL PANEL AND POWER SUPPLY LOCATED IN PARKING GARAGE.

10. FIRE SYSTEMS WEST WILL BE ADD OR RELOCATING FIRE ALARM NOTIFICATION DEVICE PER TENANT IMPROVEMENT.

TALON

1ST FLOOR DEMO PLAN

0 2' 4' 6' 8' 12' 20'
SCALE: 1/8" = 1'-0"

Must Remain On Site

WORK AREA

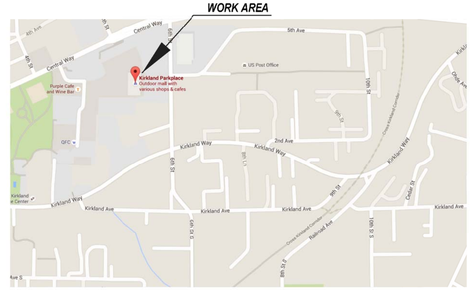

VICINITY MAP

SCALE: N.T.S.

J. Chappell 04/14/2016
MOUNT LAUREL FIRE
MOUNT LAUREL FIRE

NEW DEVICE COUNT					
SYM	TYPE	MFG	MODEL	FINISH	QUANITY
(H)	CEILING HORN STROBE	SYSTEM SENSOR	P2CW	WHITE	0
H	OUTDOOR WALL HORN STROBE	SYSTEM SENSOR	P2RK	WHITE	0
H	WALL HORN STROBE	SYSTEM SENSOR	P2R	WHITE	0
	WALL STROBE	SYSTEM SENSOR	SW	WHITE	0
	PULL STATION	GAMEWELL FCI	MS-7 SERIES	RED	0
S	SMOKE SENSORS	GAMEWELL FCI	ASD-PL2F	WHITE	0
T	HEAT SENSORS	GAMEWELL FCI	ATD-L2F	WHITE	0
MH	MINI HORNS	GAMEWELL FCI	MHW	WHITE	0
				TOTAL	0

NO.	REVISIONS	DATE	BY	CHK
1	ISSUED FOR REVIEW	04/11/2016	MWC	PL

Fire Systems West
206 FRONTAGE ROAD NORTH, SUITE C
PACIFIC, WASHINGTON 98047
(253) 833-1248 Fax: (253) 735-0113

WA CL# FIRESWI 140B1 WA ECL# FIRESWI 055LW

PROJECT:	8-17-0224
DATE:	04/11/2016
SCALE:	1/8" = 1'-0"
SHEET:	FA-02

TALON FIRE ALARM PLAN

CONTRACT WITH:
PRIDE ELECTRIC
18133 NE 68TH ST
SUITE D-120

CONTRACT NAME:
TALON
401 PARKPLACE CENTER
KIRKLAND, WA 98033

ON-SITE CONTACT: JUSTIN BRANSON 425-736-2407

-- FILE:Talon Fire Alarm Plan.cad DATE:04/11/16 TIME:09:55:20 --

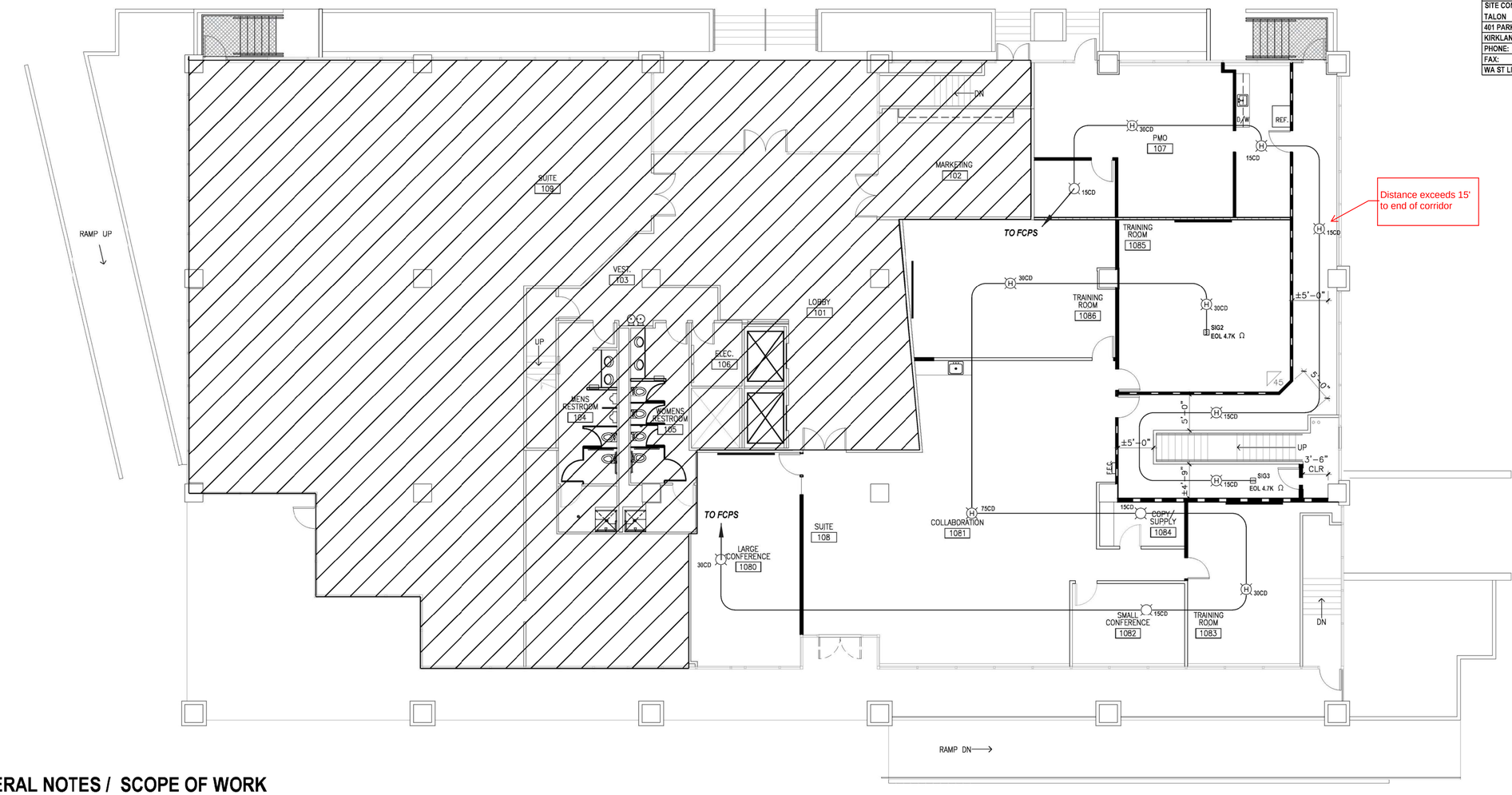

FIRE ALARM SYSTEM INFORMATION INSTALLER/SUPPLIER	
SITE CONTACT:	DESIGN/SUPPLIER:
TALON	FIRE SYSTEMS WEST, INC.
401 PARKPLACE CENTER	206 FRONTAGE ROAD NORTH, STE C
KIRKLAND, WA 98033	PACIFIC, WASHINGTON 98047
PHONE:	PHONE: (253) 833-1248
FAX:	FAX: (253) 735-0113
WA ST LICENSE: FIRESWI140B1	WA ST LICENSE: FIRESWI055LW

DESIGNER
MATT CARLMAN
FIRE SYSTEMS WEST, INC
206 FRONTAGE ROAD NORTH, STE C
PACIFIC, WASHINGTON 98047
PHONE: (253) 833-1248
FAX: (253) 735-0113
X
FOR FIRE DEPARTMENT USE ONLY

A	14/2 FPLP
B	16/2 FPLP
EX	EXISTING LOCATION (SWAP FOR NEW DEVICE)
WP	WEATHER PROOF
N	NEW DEVICE
R	RELOCATE

* STROBE COVERAGE AREA SHALL BE DEFINED AS:

10 FT. CLG. HT.	20 FT. CLG. HT.	30 FT. CLG. HT.
15 cd = 20'x20'	30 cd = 20'x20'	73 cd = 33'x33'
20 cd = 25'x25'	73 cd = 33'x33'	95 cd = 39'x39'
30 cd = 30'x30'	95 cd = 40'x40'	110 cd = 43'x40'
95 cd = 56'x56'	110 cd = 56'x56'	115 cd = 56'x56'

GENERAL NOTES / SCOPE OF WORK

1. SYSTEM WIRING NOTED ON THE DRAWINGS IS PER MANUFACTURE AND CODE REQUIREMENTS. AND ALTERATION TO SYSTEM WIRING, WITHOUT APPROVAL, IS AT CONTRACTOR'S OWN RISK!!

2. SYSTEM WIRING SHOWN ON DRAWINGS IS DIAGRAMMATIC AND ONLY USED FOR REFERENCE PURPOSES. ACTUAL WIRE AND DEVICE INSULATION MAY VARY DUE TO OBSTRUCTIONS.

3. WIRE SHOWN IN THIS DRAWING SET IS PERMITTED IN RACEWAYS LEADING TO FIRE PROTECTION EQUIPMENT. OTHER WIRE SHALL NOT BE PERMITTED IN THE SAME RACEWAY.

4. FIRE ALARM SYSTEM INSTALLATION SHALL CONFORM WITH THE LATEST U.L., N.E.C., N.F.P.A., W.A.C., AND OTHER STANDARDS AS APPLICABLE TO THE CITY STANDARDS.

5. WHEN NECESSARY, DUE TO CHANGING DESIGN REQUIREMENTS, FACTORY AVAILABILITY, ETC. FIRE SYSTEMS WEST RESERVES THE RIGHT TO SUBSTITUTE EQUIPMENT HEREIN MENTIONED OR SPECIFIED, WITH EQUIPMENT OF EQUAL OR BETTER QUALITY, FUNCTION AND DESIGN.

6. PARALLEL BRANCHING (T-TAPPING) OF WIRE TO ALL NOTIFICATION APPLIANCE CIRCUITS SHALL NOT BE PERMITTED.

7. PARALLEL BRANCHING (T-TAPPING) OF WIRE TO ANALOG INITIATING DEVICE CIRCUITS IS PERMISSIBLE.

8. THIS SPACE IS EQUIPPED WITH AN AUTOMATIC FIRE SPRINKLER SYSTEM.

9. FIRE SYSTEMS WEST WILL BE ADD OR RELOCATING FIRE ALARM NOTIFICATION DEVICE PER TENANT IMPROVEMENT.

TALON

1ST FLOOR FIRE ALARM PLAN

0 2' 4' 6' 8' 12' 20'
SCALE: 1/8" = 1'-0"

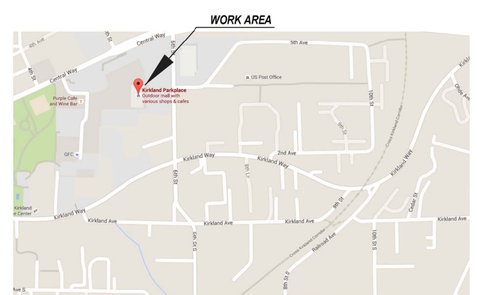

VICINITY MAP
SCALE: N.T.S.

Must Remain On Site

J. Chappell 04/14/2016
MOΛΩN ΛΑΒΕ

Fire Systems West
206 FRONTAGE ROAD NORTH, SUITE C
PACIFIC, WASHINGTON 98047
(253) 833-1248 Fax: (253) 735-0113

WA CL# FIRESWI 140B1 WA ECL# FIRESWI 055LW

NO.	REVISIONS	DATE	BY	CHK
1	ISSUED FOR REVIEW	04/11/2016	MWC	PL

NEW DEVICE COUNT							
SYM	TYPE	MFG	MODEL	FINISH	QUANITY		
H	CEILING HORN STROBE	SYSTEM SENSOR	P2CW	WHITE	0		
H	OUTDOOR WALL HORN STROBE	SYSTEM SENSOR	P2RK	WHITE	0		
H	WALL HORN STROBE	SYSTEM SENSOR	P2R	WHITE	0		
	WALL STROBE	SYSTEM SENSOR	SW	WHITE	0		
	PULL STATION	GAMEWELL FCI	MS-7 SERIES	RED	0		
S	SMOKE SENSORS	GAMEWELL FCI	ASD-PL2F	WHITE	0		
T	HEAT SENSORS	GAMEWELL FCI	ATD-L2F	WHITE	0		
MH	MINI HORNS	GAMEWELL FCI	MHW	WHITE	0	TOTAL	0

PROJECT:	8-17-0224
DATE:	04/11/2016
SCALE:	1/8" = 1'-0"
SHEET:	FA-03

TALON FIRE ALARM PLAN

CONTRACT WITH:
PRIDE ELECTRIC
18133 NE 68TH ST
SUITE D-120

CONTRACT NAME:
TALON
401 PARKPLACE CENTER
KIRKLAND, WA 98033

ON-SITE CONTACT: JUSTIN BRANSON 425-736-2407

-- FILE:Talon Fire Alarm Plan.cad DATE:04/11/16 TIME:09:57:30 --