MADISON HOUSE

A.L.T.A. / A.C.S.M. LAND TITLE SURVEY

A PORTION OF THE SOUTHEAST QUARTER OF THE NORTHWEST QUARTER OF SECTION 28, TOWNSHIP 26 NORTH, RANGE 5 EAST, W.M., CITY OF KIRKLAND, KING COUNTY, WASHINGTON

REFERENCES

1. PLAT OF PUGET SOUND CENTER RECORDED IN VOLUME 92 OF PLATS, PAGES 85 AND 96, RECORDS OF KING COUNTY, WASHINGTON.
2. AFFIDAVIT OF CORRECTION OF PLAT, AFN 7105100304 (SEE NOTE #18 OF "SCHEDULE B – ITEMS" ON SHEET 1)
3. CITY OF KIRKLAND SHORT PLAT NO. 76-9-9, AFN 7812010652 (MAP IS ILLEGIBLE)
4. RECORD OF SURVEY, AFN 20081029900002

ENCROACHMENT NOTE

THIS SURVEY SHOWS A BUILDING ENCROACHMENT INTO THE 12' SETBACK AREA IN THE NORTHERN PORTION OF THE SITE. HOWEVER, THE KIRKLAND PLANNING DEPARTMENT HAS NOTIFIED THAT THE BUILDING MET HEIGHT AND SETBACK REQUIREMENTS AT THE TIME IT WAS BUILT.

BUILDING ENCROACHMENT DETAIL SCALE: 1" = 10'

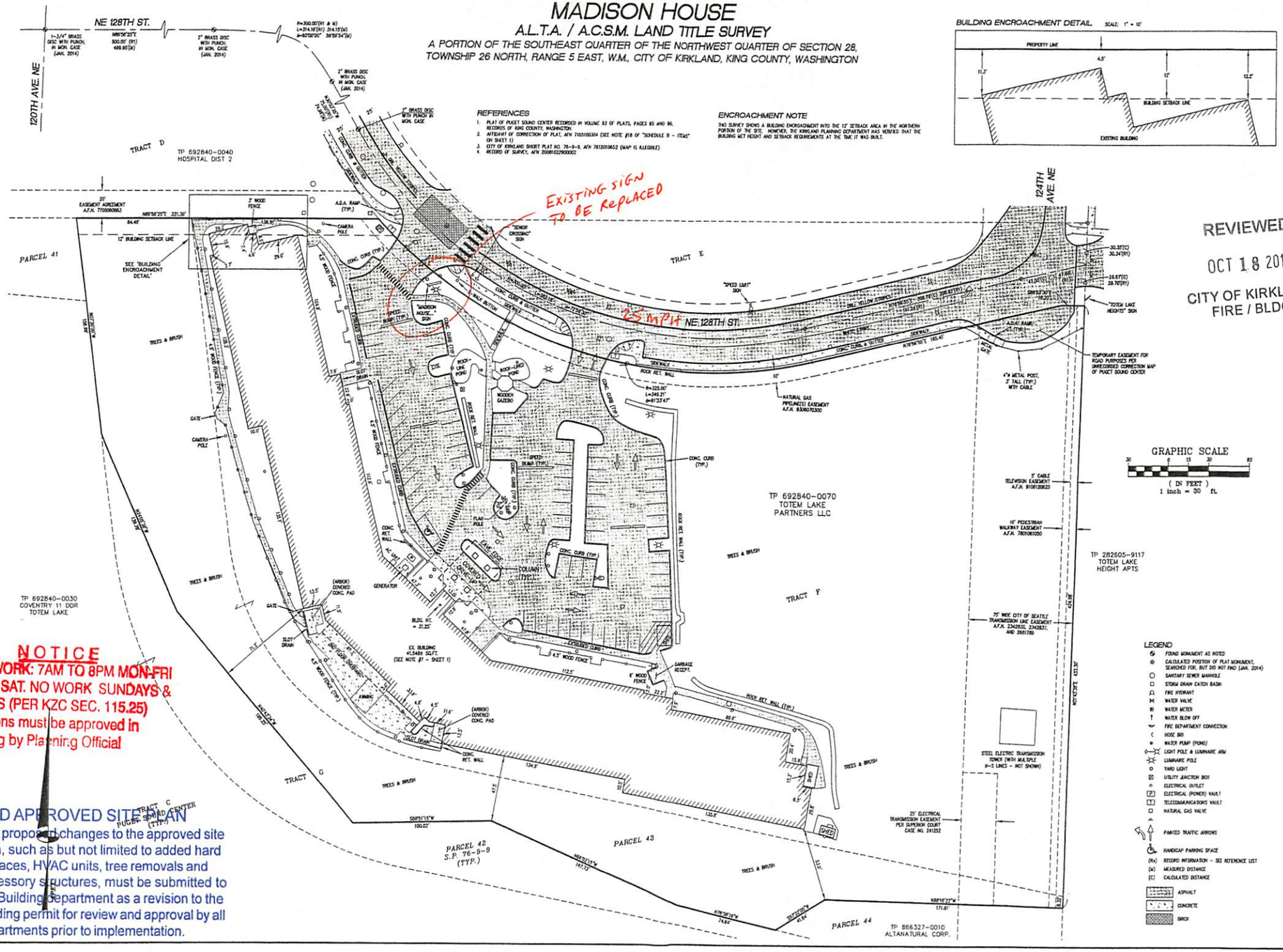

REVIEWED
OCT 18 2014
CITY OF KIRKLAND
FIRE / BLDG

NOTICE
HOURS OF WORK: 7AM TO 8PM MON-FRI
9AM TO 6PM SAT. NO WORK SUNDAYS & HOLIDAYS (PER KZC SEC. 115.25)
Exceptions must be approved in writing by Planning Official

PCD APPROVED SITE PLAN
Any proposed changes to the approved site plan, such as but not limited to added hard surfaces, HVAC units, tree removals and accessory structures, must be submitted to the Building Department as a revision to the building permit for review and approval by all departments prior to implementation.

LEGEND

- FOUND MONUMENT AS NOTED
- CALCULATED POSITION OF PLAT MONUMENT, SEARCHED FOR, BUT DID NOT FIND (JAN. 2014)
- SANITARY SEWER MANHOLE
- STORM DRAIN CATCH BASIN
- FIRE HYDRANT
- WATER VALVE
- WATER METER
- WATER BLOW OFF
- FIRE DEPARTMENT CONNECTION
- HOSE BIB
- WATER PUMP (POND)
- LIGHT POLE & LUMINAIRE ARM
- LUMINAIRE POLE
- YARD LIGHT
- UTILITY JUNCTION BOX
- ELECTRICAL OUTLET
- ELECTRICAL (POWER) VAULT
- TELECOMMUNICATIONS VAULT
- NATURAL GAS VALVE
- PAINTED TRAFFIC ARROWS
- HANDICAP PARKING SPACE
- (RX) RECORD INFORMATION – SEE REFERENCE LIST
- (M) MEASURED DISTANCE
- (C) CALCULATED DISTANCE
- ASPHALT
- CONCRETE
- BRICK

REV NO	REVISION DESCRIPTION	DATE	BY
REV. #1	MISC. REVISIONS PER REVIEW COMMENTS AND ADDITIONAL INFORMATION	2-28-14	SW

PROJECT MANAGER: SIGNATURE:

DESIGN
DRAWN BJN
CHECKED MPG
SEC 28 T 26 N R 5 E
DISC NO. 32575.DWG
DATE 01-29-14
SCALE 1" = 30'

DATE SEALED 3/4/2014

TITLE
MADISON HOUSE
A.L.T.A. / A.C.S.M. LAND TITLE SURVEY

CLIENT/OWNER
RJ DEVELOPMENT SERVICES
401 CENTRAL ST. S.E.
OLYMPIA, WA 98501
(ATTN: JEFF YATES)

Apex Engineering
2601 South 35th, Suite 200
Tacoma, Washington 98409-7499
(253) 473-4494 / FAX: (253) 473-2989

SHEET 2 OF 2
FILE NO 32575

© APEX ENGINEERING PLLC 2013

NOTES:
- STAIN ALL EXPOSED WOOD SURFACES, VERIFY COLOR WITH LANDSCAPE ARCHITECT
- ALL CEDAR SHALL BE TK SELECT
- MITER ALL HORIZONTAL CEDAR BOARDS AT CORNERS TO ELIMINATE VISIBLE END CUTS

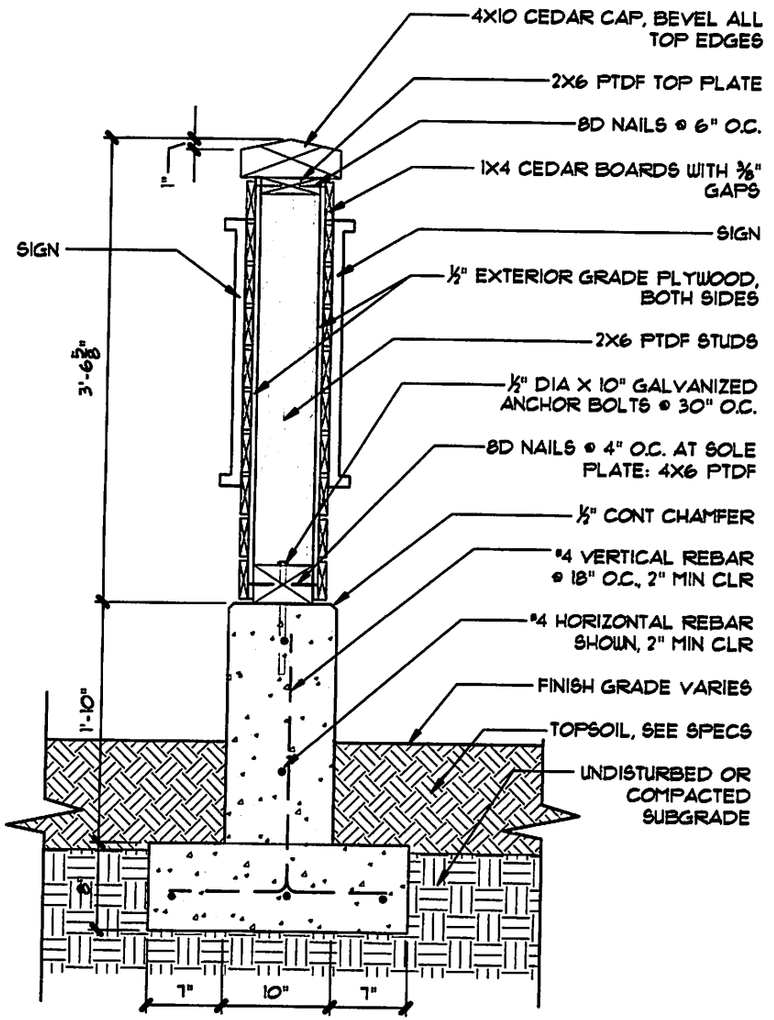

SECTION

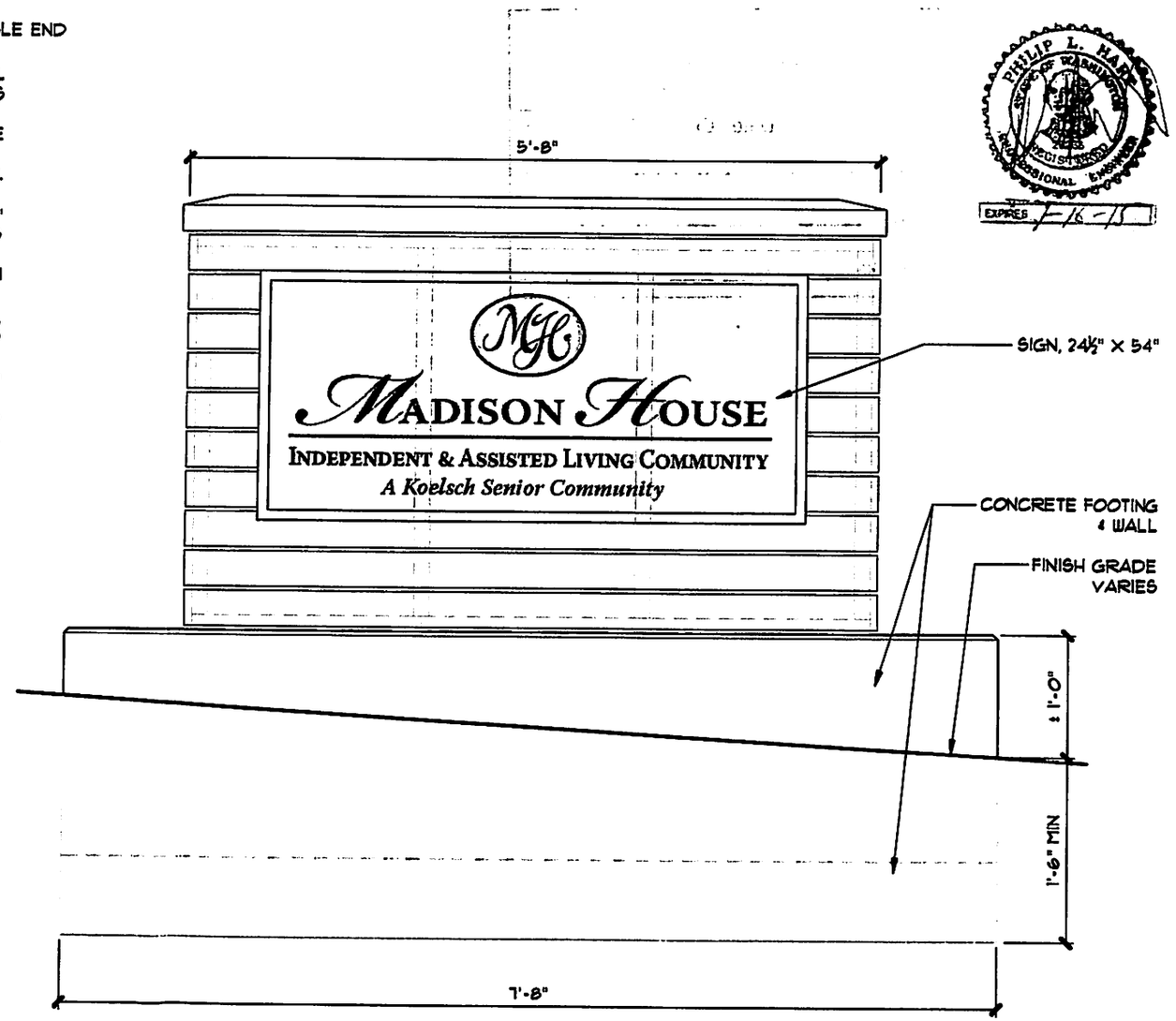

ELEVATION

allworth design
LANDSCAPE ARCHITECTS

PROJECT TITLE	SCALE	DATE:	ISSUED BY:
MADISON HOUSE	1"=1'-0"	9.18.14	CB
	DESCRIPTION:		
	MONUMENT SIGN		

CITY OF KIRKLAND
APPROVED FOR SUBMITTAL

	Initials / Date	Type of Review Exp	FT	Reg	M/F
Building	/			X	
Planning	AHB / 10/1		X		
Public works	/				

REVIEWED
OCT 18 2014
CITY OF KIRKLAND
FIRE / BLDG

CITY OF KIRKLAND
BUILDING DEPARTMENT

Permit #	SGN14-05923
Address	12215 NE 128TH ST
Work Class	NEW
Project	
Owner	KIRKLAND PARTNERS LLC
Date Submitted	10/01/2014
Date Approved	10/18/14
Reviewed By	

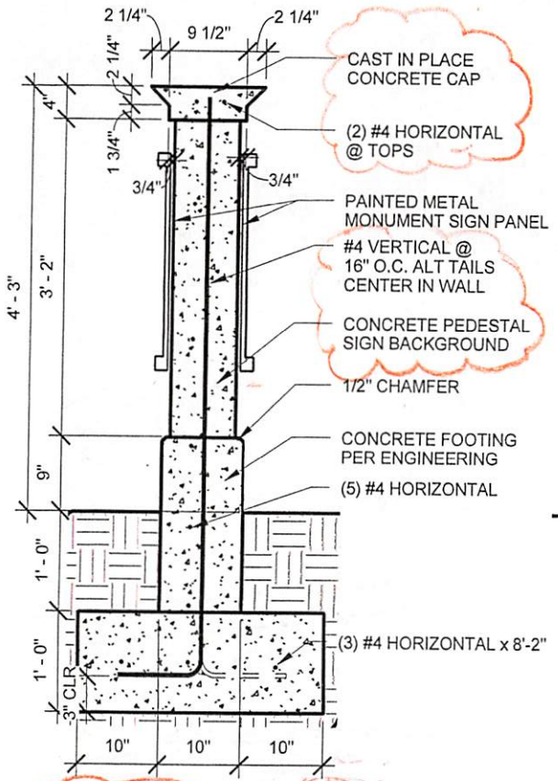

3 SECTION 1
3/4" = 1'-0"

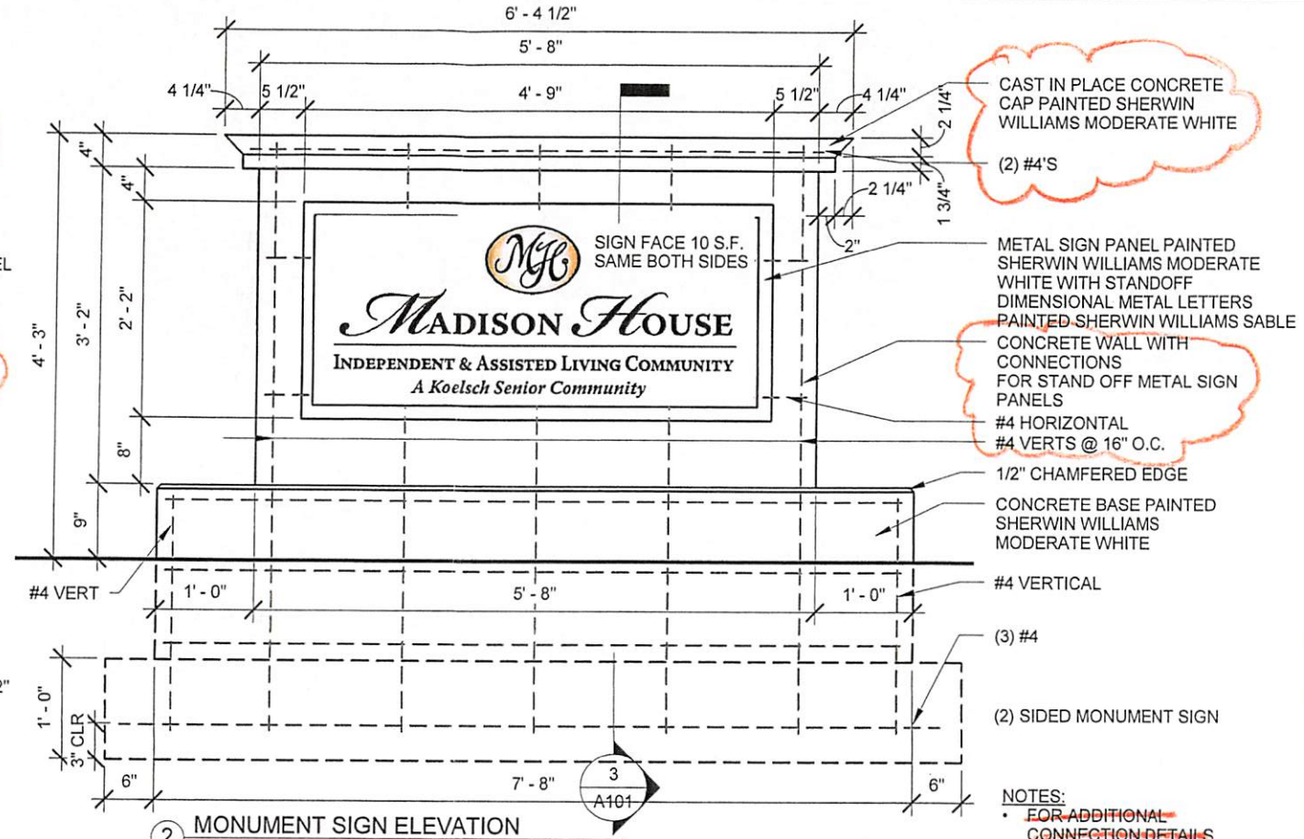

2 MONUMENT SIGN ELEVATION
3/4" = 1'-0"

NOTES:
- ~~FOR ADDITIONAL CONNECTION DETAILS AND FOOTINGS SEE STRUCTURAL DRAWINGS~~
- TOTAL SIGN FACE EACH SIDE: 10 SF

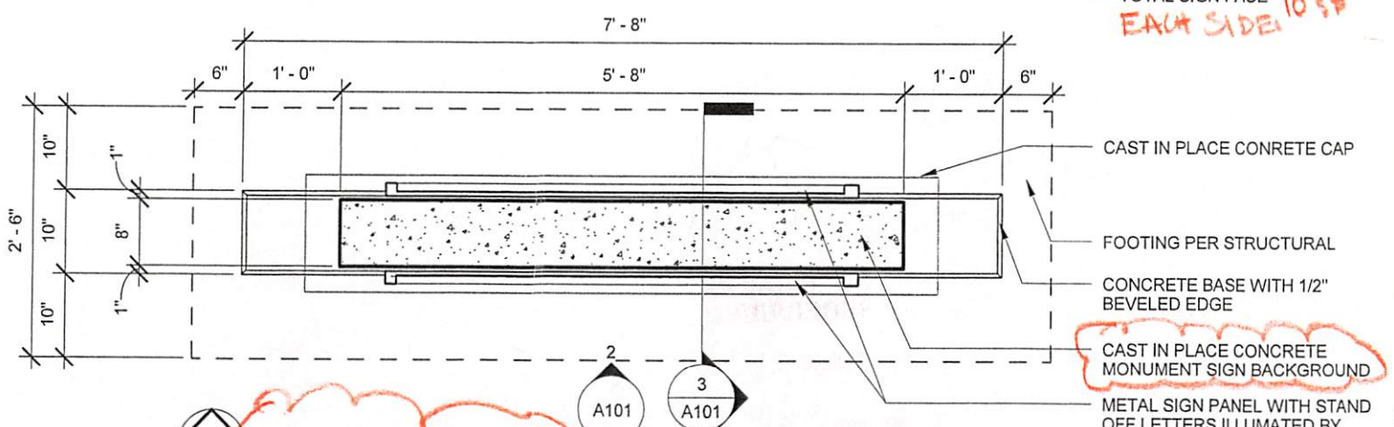

1 MONUMENT SIGN PLAN
3/4" = 1'-0"

REVIEWED
APR 06 2015
CITY OF KIRKLAND
FIRE / BLDG

MICHAEL SZRAMEK
STATE OF WASHINGTON
20860
STRUCTURAL ENGINEER
PROFESSIONAL ENGINEER
5/13/15

MC OLYMPIA WASHINGTON
MC SQUARED 360-754-9339

RJ DEVELOPMENT
Est. 2006
SENIORS HOUSING DELIVERED

MADISON HOUSE SIGN

12215 NE 128TH ST.
KIRKLAND WA, 98034-7383

DATE:03/12/15

SIGN PLAN

A101

Drawn by: JS
Scale: 3/4" = 1'-0"

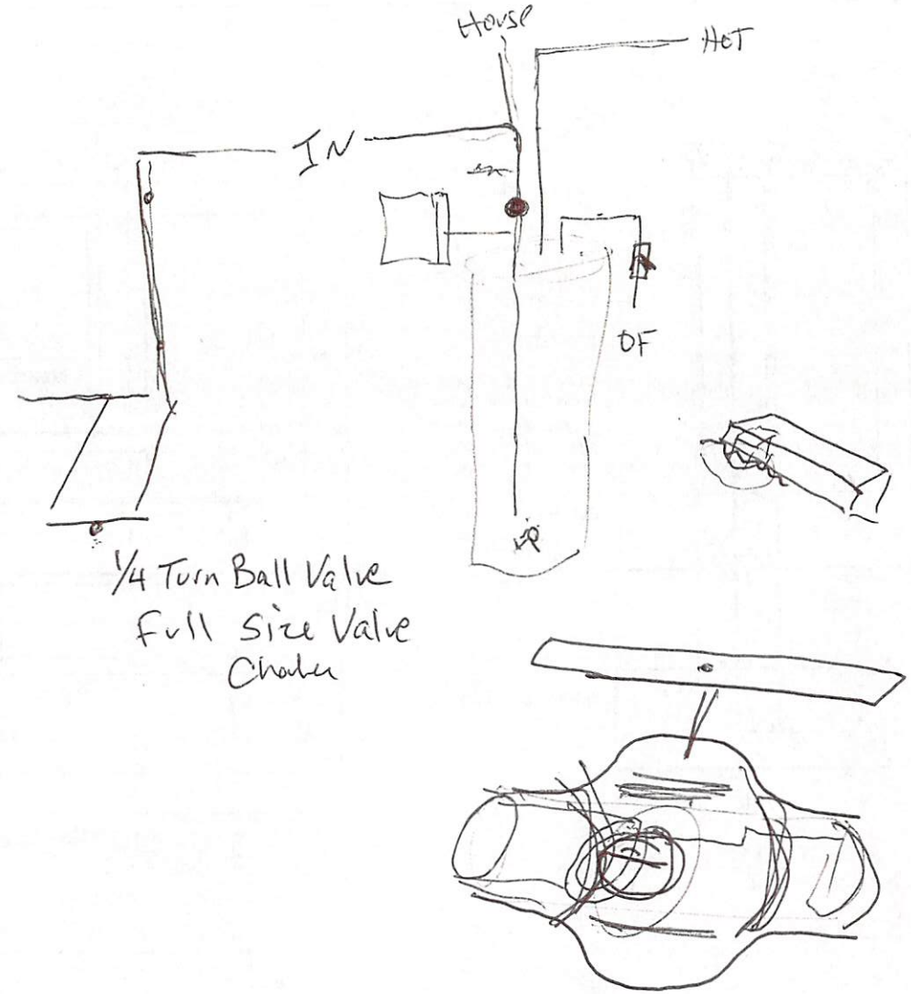

CITY COPY

REVISION RECEIVED

MAR 17 2015

PERMIT # SGN14-05923
EXP____ FT____ REG____

POD