Bulletin 014 Rev. N

Model F1FR Series Quick Response Glass Bulb Sprinklers

Model F1FR56 Sprinkler Types
Standard Spray Upright
Standard Spray Pendent
Conventional Upright/Pendent
Vertical Sidewall
Horizontal Sidewall

Model F1FR56 Recessed Sprinkler Types
Standard Spray Pendent
Horizontal Sidewall

Model F1FR56 Concealed Sprinkler Types
Standard Spray Pendent

Model F1FR42, F1FRXLH & F1FR28 Sprinkler Types
Standard Spray Upright
Standard Spray Pendent

Model F1FR40 Sprinkler Types
Standard Spray Pendent

Model F1FR42, F1FR40, F1FRXLH & F1FR28 Recessed Sprinkler Types
Standard Spray Pendent

Model F1FR56LL & F1FR42LL NSF Certified Low Lead Sprinkler Types
Standard Spray Pendent with less than 0.25% Lead Content

Listing & Approvals
The following organizations provide Listings or Approvals for various Model F1FR series sprinklers. See the Design and Installation table in this Bulletin for information on specific listings and approvals applicable to each sprinkler.

1. Underwriters Laboratories Inc. and Certified for Canada (cULus).
2. FM Approvals (FM)
3. Loss Prevention Certification Board (LPCB)
4. VdS Schadenverhütung GmbH (VdS)
5. NSF Certified to NSF/ANSi Standard 61 Annex G (NSF)
6. EC Certificate: 0786-CPD-40239 (RA1414), 0786-CPD-40251 (RA1425), 0786-CPD-40252 (RA1475) (EC)

UL Listing Category
Sprinklers, Automatic & Open (VNIV)
Quick Response Sprinkler

Upright

Pendent

Conventional

Vertical Sidewall

Horizontal Sidewall

Recessed Pendent/F1/F2

Recessed Horizontal Sidewall

Concealed Pendent

Recessed Pendent/FP

XLH Upright

XLH Pendent

XLH Recessed Pendent F1/F2

Product Description

XLH Recessed Pendent FP

Reliable Model F1FR series sprinklers are quick-response automatic sprinklers with a glass bulb thermal element. Model F1FR series sprinklers are Standard Spray sprinklers, with the exception of the Model F1FR56 Conventional sprinkler which is an Old-style/Conventional sprinkler.

The Model F1FR Series automatic sprinklers utilize a 3.0 mm frangible glass bulb. These sprinklers have demonstrated response times in laboratory tests which are five to ten times faster than standard response sprinklers. This quick response enables the Model F1FR Series sprinklers to apply water to a fire faster than standard-response sprinklers of the same temperature rating.

The glass bulb consists of an accurately controlled amount of special fluid hermetically sealed inside a precisely manufactured glass capsule. This glass bulb is specially constructed to provide fast thermal response.

Reliable Automatic Sprinkler Co., Inc., 103 Fairview Park Drive, Elmsford, New York 10523

At normal temperatures, the glass bulb contains the fluid in both the liquid and vapor phases. The vapor phase can be seen as a small bubble. As heat is applied, the liquid expands, forcing the bubble smaller and smaller as the liquid pressure increases. Continued heating forces the liquid to push out against the bulb, causing the glass to shatter, opening the waterway and allowing the deflector to distribute the discharging water.

Model F1FR Series sprinklers provide a wide range of options where quick-response, glass bulb sprinklers are used:

- Pendent, recessed pendent, upright, horizontal sidewall, and vertical sidewall deflectors
- K-factors of 2.8 (40 metric), 4.0 (57 metric), 4.2 (60 metric), and 5.6 (80 metric)
- Flush, recessed, and concealed installations

See the Design and Installation Information table in this Bulletin for information on the approvals and availability of specific Model F1FR series sprinkler configurations.

Model F1FR Recessed Pendent and Recessed Horizontal Sidewall sprinklers are required to be used with Reliable Model F1, F2, or FP recessed escutcheons. See the Recessed Escutcheon Data table in this Bulletin for listing and approval information with each specific Model F1FR series sprinkler. Model F1 and F2 recessed escutcheons, shown in Fig. 1 and 3, are a friction fit assembly allowing for 3/4-inch (19mm) and 1/2-inch (12.7mm) of adjustment, respectively. Model FP recessed escutcheons, shown in Fig. 2, provide a 1/2-inch (12.7mm) threaded adjustment.

Model F1FR56 Concealed Pendent and Model F1FR56LL Concealed Pendent sprinklers are required to be used with Model CCP cover plates. A standard profile Model CCP cover plate is available that provides up to 1/2-inch (12.7mm) of cover plate adjustment. In addition, a low profile Model CCP cover plate is also available that provides up to 5/16-inch (8.0mm) of cover plate adjustment. See the Design and Installation Information and Listed and Approved Temperature Ratings tables in this Bulletin for further information on approved cover plate options.

Application

Model F1FR Series sprinklers are intended for use in accordance with NFPA 13, FM Property Loss Prevention Data Sheets, and the requirements of the Authority Having Jurisdiction. Care must be exercised that the k-factor, temperature rating, deflector style, and sprinkler type are in accordance with the requirements of the applicable design and installation standards. In addition, Model F1FR Series sprinklers must be used in accordance with their listings and approvals, as well as the information provided in this Bulletin.

Installation

Glass bulb sprinklers have orange bulb protectors or protective caps to minimize bulb damage during shipping, handling and installation. Reliable sprinkler installation wrenches are designed to install sprinklers with bulb protectors in place. Remove the bulb protector at the time when the sprinkler system is placed in service for fire protection. Removal of the bulb protector before this time may leave the bulb vulnerable to damage. Remove bulb protectors by undoing the clasp by hand. Do not use tools to remove bulb protectors.

Model F1FR Series sprinklers must be installed with the Reliable sprinkler installation wrench identified in the Design and Installation Information table in this Bulletin. Any other wrench may damage the sprinkler. A leak tight sprinkler joint can be obtained with a torque of 8 to 18 lb-ft (11 to 24 N-m). Do not tighten sprinklers over the maximum recommended installation torque. Exceeding the maximum recommended installation torque may cause leakage or impairment of the sprinkler.

Recessed Sprinklers

Model F1FR Series Recessed sprinklers are to be installed as shown in Fig. 1, Fig. 2, or Fig. 3, as applicable to the specific model being installed. The Recessed Escutcheon Data table in the Bulletin identifies the only recessed escutcheons that are permitted to be used with each Model F1FR Series Recessed sprinkler. The use of any other recessed escutcheon will void all approvals and negate all warranties.

Concealed Sprinklers

Model F1FR Series Concealed Pendent sprinklers are to be installed as shown in Fig. 4 or Fig. 5, as applicable to the selected cover plate. Model F1FR56 Concealed Pendent and Model F1FR56LL Concealed Pendent sprinklers have a factory-installed Model CCP cup. A protective cap is installed at the factory that should remain on the sprinkler until the sprinkler is installed and should then be reinstalled on the sprinkler until the cover plate is installed. The concealed sprinkler assemblies are completed by the installation of a Model CCP push-on/thread-off cover plate assembly. The cover plate and sprinkler cup assemblies are joined using a cover plate skirt with flexible tabs for threaded engagement. A choice of two Model CCP cover plate assemblies provides either 1/2-inch (13mm) or 5/8-inch (8mm) of cover adjustment. Do not install Model F1FR Series Concealed Pendent sprinklers in ceilings which have positive pressure in the space above.

Model F1FR Series Concealed Pendent sprinklers require a 2-5/8-inch (67mm) diameter hole to be cut in the ceiling. The Model RC1 wrench is used to engage the sprinkler wrenching surfaces and to install the sprinkler in the fitting. Remove the protective cap to install the sprinkler, then reinstall the protective cap until the cover plate is installed. When inserting or removing the wrench from the sprinkler/cup assembly, care should be taken to prevent damage to the sprinkler. Do not wrench any other part of the sprinkler/cup assembly. Installation is completed by removing the protective cap from the sprinkler and pushing the cover plate onto the cup. Final adjustment is made by hand turning the cover plate until the skirt flange makes full contact with the ceiling. Cover plate removal requires turning the cover plate in the counter clockwise direction. After installation, inspect all sprinklers to ensure that there is a gap between the cover plate and ceiling and that the four cup slots are open and free from any air flow impediment to the space above.

Concealed cover plate/cup assemblies are listed only for use with specific sprinklers. The use of any concealed cover plate/cup assembly other than the Reliable Model CCP with Model F1FR56 Concealed Pendent and Model F1FR56LL Concealed Pendent sprinklers or the use of the Model CCP Concealed cover plate assembly on any sprinkler with which it is not specifically listed my prevent good fire protection and will void all guarantees, warranties, listings and approvals.

Technical Data:

Sensitivity: Quick-response
Thread Size: 1/2-inch NPT standard; ISO 7-R1/2 optional
Maximum Working Pressure: 175 psi (12 bar) - 100% Factory tested hydrostatically to 500 psi (34.5 bar)
SIN RA1425, RA1414 & RA1435 cULus listed for 250 psi (17 bar)

Design and Installation Information

Model	Nominal K-factor		Nominal Orifice Diameter		Deflector/ Orientation	Nominal Sprinkler Height		Installation Wrench	SIN	Listings and Approvals	Approval Notes
	US	Metric	inches	mm		inches	mm				
F1FR28	2.8	40	3/8	10	Pendent	2.25	57	D	RA1411	cULus	2
					Recessed Pendent	2.25	57	GFR2	RA1411	cULus	2
					Upright	2.25	57	D	RA1421	cULus	1,2
F1FR40	4.0	57	3/8	10	Pendent	2.25	57	D	RA1418	VdS	
					Recessed Pendent	2.25	57	GFR2	RA1418	VdS	
F1FR42	4.2	60	7/16	10	Pendent	2.25	57	D	RA1413	cULus	2
					Recessed Pendent	2.25	57	GFR2	RA1413	cULus	2
					Upright	2.25	57	D	RA1423	cULus	1,2
F1FR42LL	4.2	60	7/16	10	Pendent	2.25	57	D	RA1410	cULus, NSF	
					Recessed Pendent	2.25	57	GFR2	RA1410	cULus, NSF	
F1FRXLH (F1FR42 with Pintle)	4.2	60	7/16	10	Pendent	2.25	57	D	RA1413	cULus	2
					Recessed Pendent	2.25	57	GFR2	RA1413	cULus	2
					Upright	2.25	57	D	RA1423	cULus	1,2
F1FR56	5.6	80	1/2	15	Pendent	2.25	57	D	RA1414	cULus, FM, LPCB, VdS, EC	1,2,3,4
					Recessed Pendent	2.25	57	GFR2	RA1414	cULus, FM, LPCB, VdS, EC	1,2,3,4
					Concealed Pendent	2.25	57	RC1	RA1414	cULus,VdS,EC	5,6
					Upright	2.25	57	D	RA1425	cULus, FM, LPCB, VdS, EC	1,2,3,4
					"Conventional (Pendent or Upright)"	2.25	57	D	RA1475	LPCB, VdS, EC	4
F1FR56LL	5.6	80	1/2	15	Pendent	2.25	57	D	RA1415	cULus, NSF	1
					Recessed Pendent	2.25	57	GFR2	RA1415	cULus, NSF	
					Concealed Pendent	2.25	57	RC1	RA1414	cULus, NSF	6
F1FR56	5.6	80	1/2	15	Horizontal Sidewall	2.63	67	D	RA1435	cULus, FM	1,2,3,7
					Recessed Horizontal Sidewall	2.63	67	GFR2	RA1435	cULus, FM	8
F1FR56	5.6	80	1/2	15	Vertical Sidewall (Pendent or Upright)	2.25	57	D	RA1485	cULus, FM, LPCB	1,2,3,9

(1) cULus Listed Corrosion Resistant sprinkler when ordered with available Polyester coating.
(2) cULus Listed Corrosion Resistant sprinkler when ordered with available Electroless Nickel PTFE plating.
(3) Available with FM approved Polyester coating in black or white.
(4) Available with LPCB and VdS approved Polyester coating.
(5) VdS and EC approvals of the F1FR56 Concealed Pendent sprinkler are for 155°F (68°C) temperature rated sprinklers only. VdS approved sprinklers must use Norbulb brand glass bulbs with the 1/2-inch (12.7mm) adjustment Model CCP cover plate only.
(6) Model F1FR56 Concealed Pendent and Model F1FR56LL Concealed Pendent sprinklers must be used with Reliable Model CCP cover plates, available as either standard depth with 1/2-inch (12.7mm) of adjustment or low profile with 5/16-inch (8.0 mm) of adjustment.
(7) cULus Listing of the F1FR56 Horizontal Sidewall sprinkler is for Light and Ordinary Hazard occupancies only. FM Approval of the F1FR56 Horizontal Sidewall sprinkler is for Light Hazard occupancies only.
(8) cULus Listing and FM Approval of the F1FR56 Recessed Horizontal Sidewall sprinkler is for Light Hazard occupancies only.
(9) The F1FR56 Vertical Sidewall sprinkler is listed and approved for use only in Light Hazard occupancies. Minimum to maximum deflector to ceiling distance shall be 4 inches to 12 inches (102mm to 305mm). LPCB approval of the F1FR56 Vertical Sidewall sprinkler is for installation in the Pendent position only.

Listed and Approved Temperature Ratings

Model	Deflector/ Orientation	Ordinary Temp. Classification 100°F (38°C) Max. Ambient Temp.		Intermediate Temp. Classification 150°F (65°C) Max. Ambient Temp.		High Temp. Classification 225°F (107°C) Max. Ambient Temp.
		135°F (57°C) Temp. Rating	155°F (68°C) Temp. Rating	175°F (79°C) Temp. Rating	200°F (93°C) Temp. Rating	286°F (141°C) Temp. Rating
		Orange Bulb	Red Bulb	Yellow Bulb	Green Bulb	Blue Bulb
F1FR28	Pendent	cULus				
	Recessed Pendent	cULus				–
	Upright	cULus				
F1FR40	Pendent	VdS				
	Recessed Pendent	VdS				–
F1FR42	Pendent	cULus				
	Recessed Pendent	cULus				–
	Upright	cULus				
F1FR42LL	Pendent	–			cULus, NSF	–
	Recessed Pendent	–			cULus, NSF	–
F1FRXLH	Pendent	cULus				
	Recessed Pendent	cULus				–
	Upright	cULus				
F1FR56	Pendent	cULus, FM, LPCB, VdS, EC				
	Recessed Pendent	cULus, FM, LPCB, VdS, EC				–
	Concealed Pendent*	cULus	cULus,VdS,EC	cULus		–
	Upright	cULus, FM, LPCB, VdS, EC				
	"Conventional (Pendent or Upright)"	LPCB, VdS, EC				
F1FR56LL	Pendent	–			cULus, NSF	–
	Recessed Pendent	–			cULus, NSF	–
	Concealed Pendent*	–			cULus, NSF	–
F1FR56	Horizontal Sidewall	cULus, FM				
	Recessed Horizontal Sidewall	cULus, FM				–
F1FR56	Vertical Sidewall (Pendent or Upright)	cULus, FM, LPCB				

* Model F1FR56 Concealed Pendent and F1FR56LL Concealed Pendent sprinklers must be used with Reliable Model CCP cover plates. For Ordinary Temperature Classification sprinklers use a 135°F (57°C) temperature rated cover plate. For Intermediate Temperature Classification sprinklers use a 165°F (74°C) temperature rated cover plate.

Recessed Escutcheon Data

Model	Deflector/ Orientation	Listed and Approved Recessed Escutcheons			SIN
		Model F1 (Fig. 1 & 3) 3/4-inch (19mm) adjustment	Model F2 (Fig. 1 & 3) 1/2-inch (12.7mm) adjustment	Model FP (Fig. 2) 1/2-inch (12.7mm) adjustment	
F1FR28	Recessed Pendent	cULus	cULus	cULus	RA1411
F1FR40	Recessed Pendent	VdS	VdS	VdS	RA1418
F1FR42	Recessed Pendent	cULus	cULus	cULus	RA1413
F1FR42LL	Recessed Pendent	cULus, NSF	cULus, NSF	cULus, NSF	RA1410
F1FR42XLH	Recessed Pendent	cULus	cULus	cULus	RA1413
F1FR56	Recessed Pendent	cULus, LPCB, VdS, EC	cULus, FM, LPCB, VdS, EC	cULus, VdS, EC	RA1414
F1FR56LL	Recessed Pendent	cULus, NSF	cULus, NSF	cULus, NSF	RA1415
F1FR56	Recessed Horizontal Sidewall	cULus	cULus, FM	cULus	RA1435

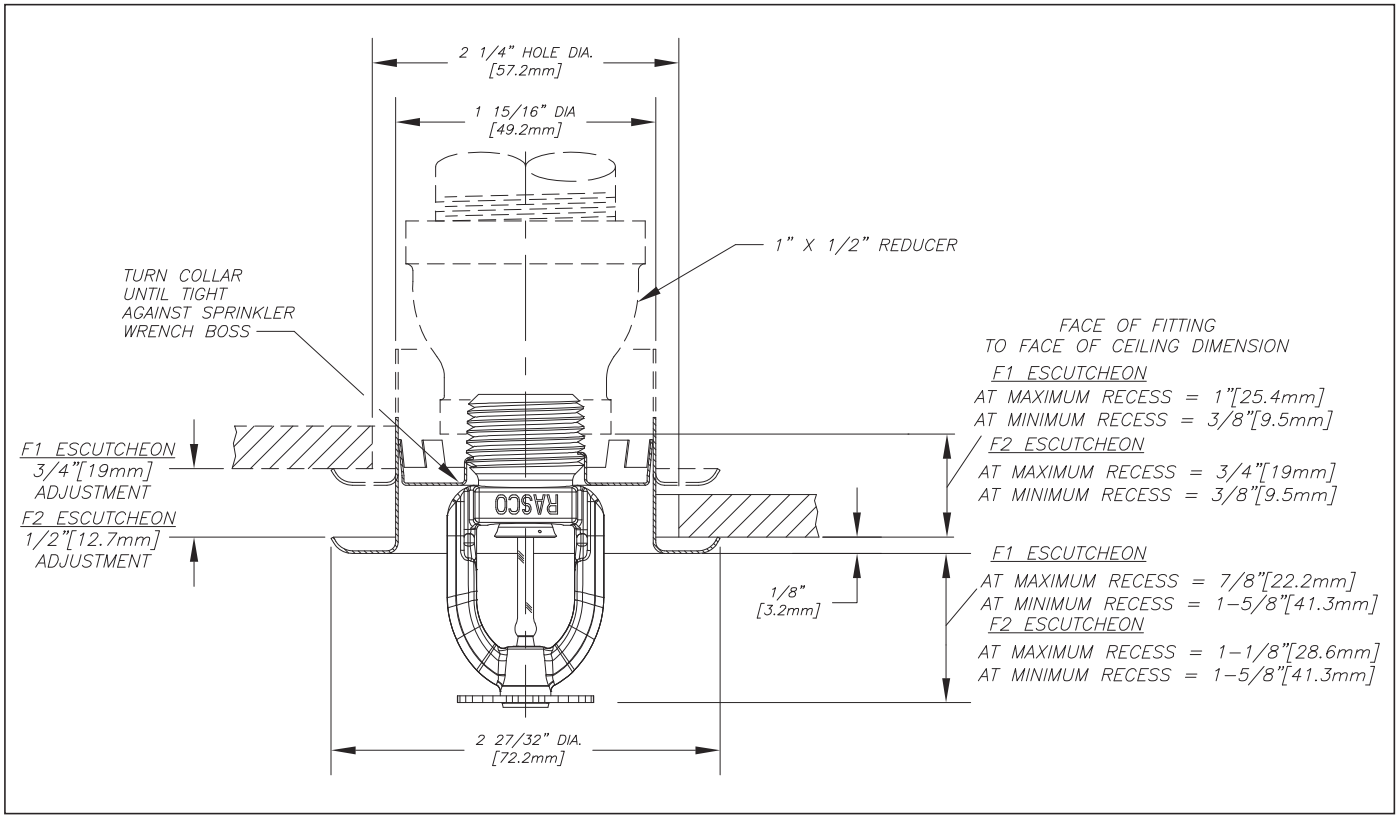

Fig. 1
Model F1FR56, F1FR56LL, F1FR42, F1FR40, F1FR42LL, F1FRXLH & F1FR28
Recessed Pendent sprinkler with Model F1 or F2 escutcheon

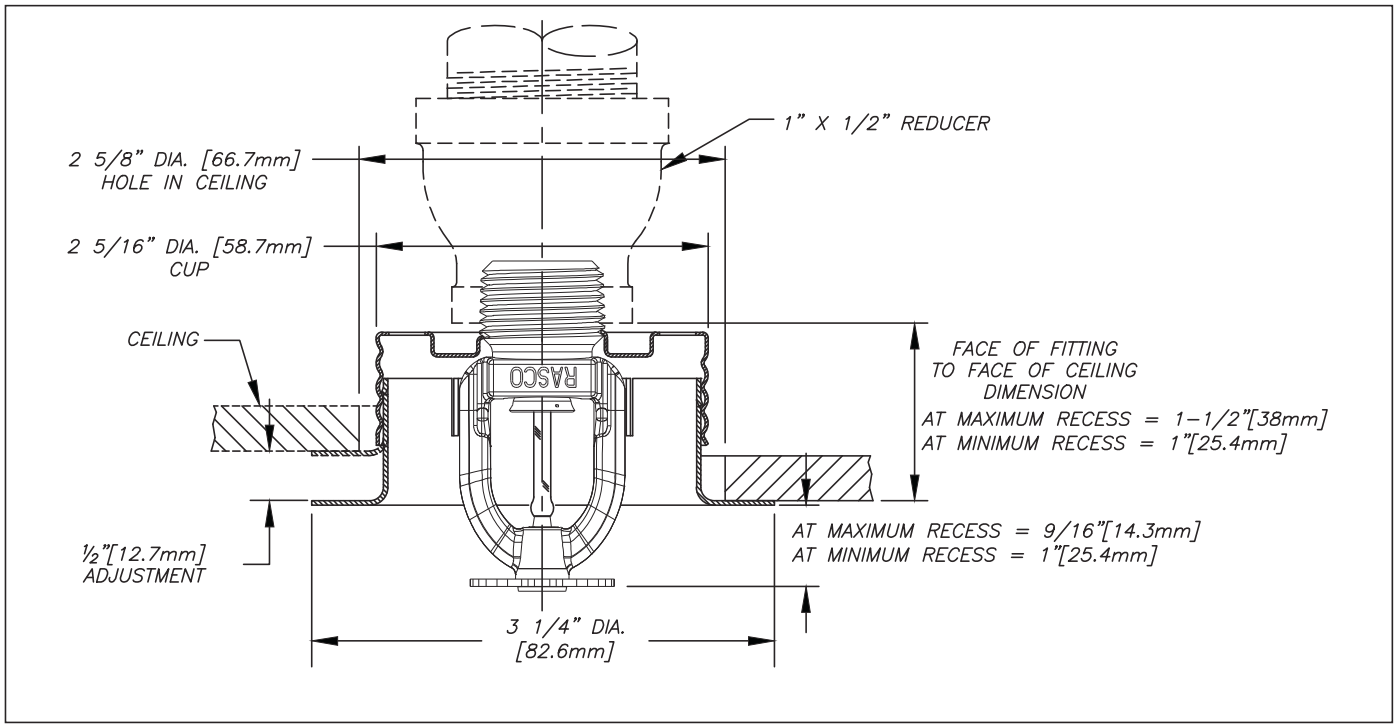

Fig. 2
Model F1FR56, F1FR56LL, F1FR42, F1FR40, F1FR42LL, F1FRXLH & F1FR28
Recessed Pendent sprinkler with Model FP escutcheon

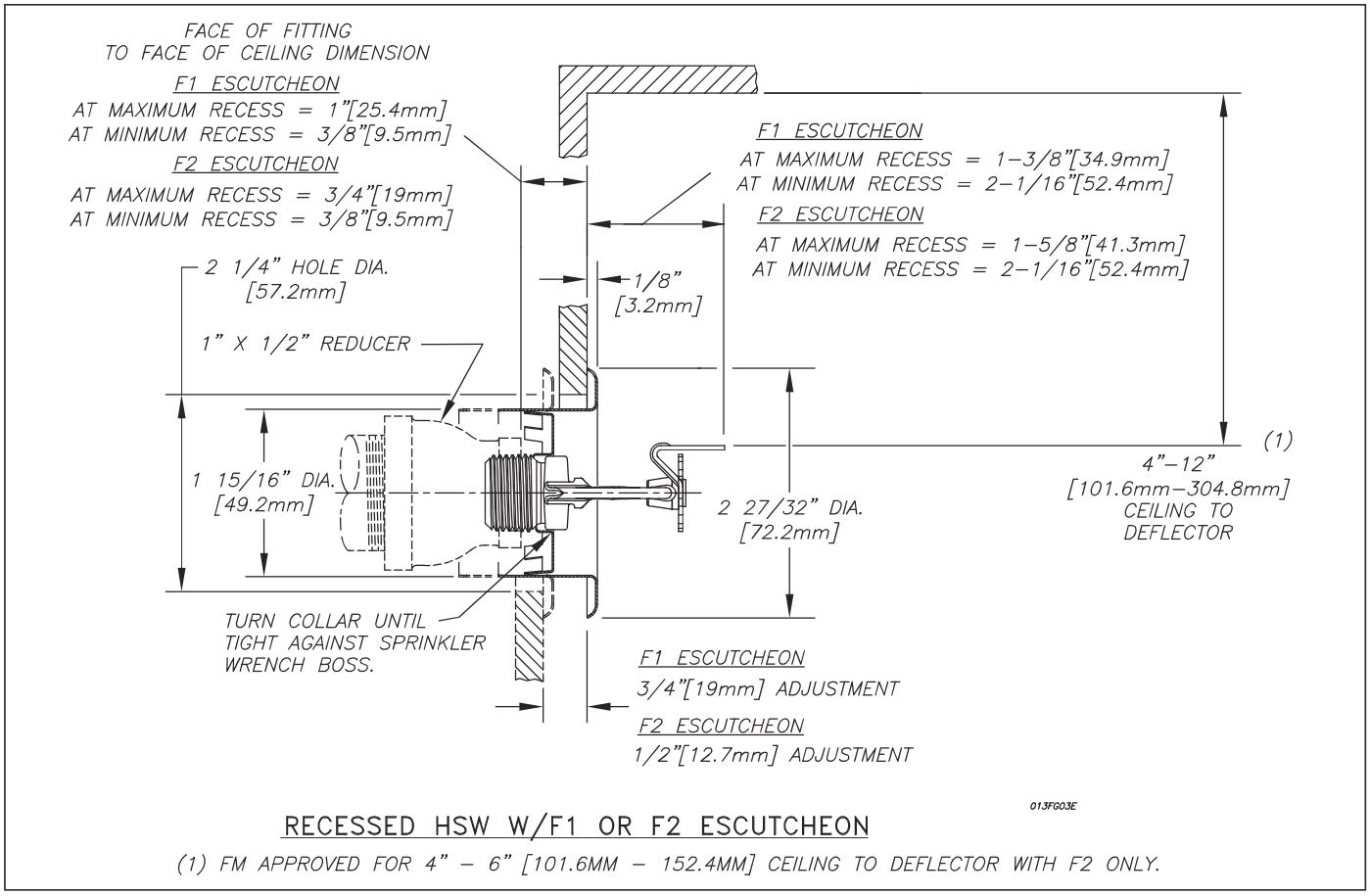

Fig. 3
Model F1FR56 Recessed Horizontal Sidewall sprinkler with Model F1 or F2 escutcheon

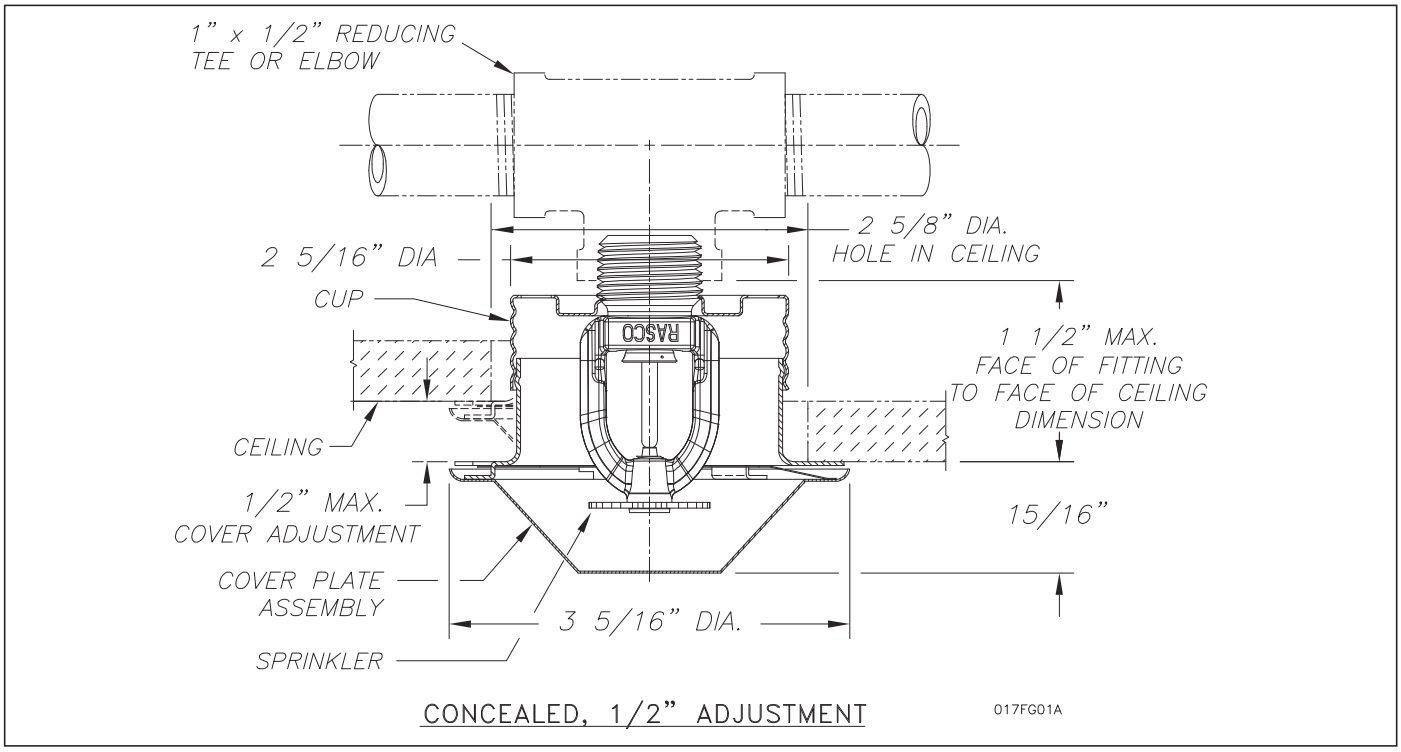

Fig. 4
Model F1FR56/F1FR56LL Concealed Pendent sprinkler with standard depth
1/2-inch (12.7mm) adjustment - Model CCP cover plate

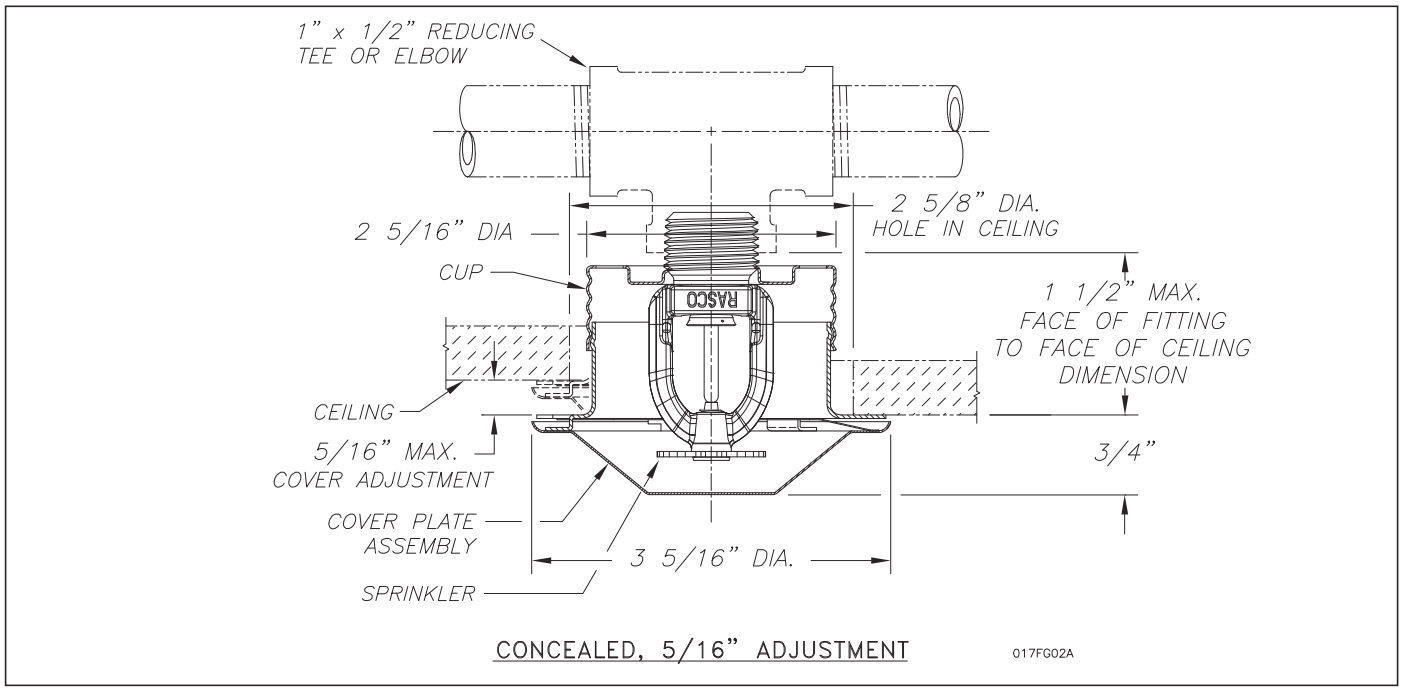

Fig. 5 - Model F1FR56/F1FR56LL Concealed Pendent sprinkler with low profile 5/16-inch (8.0mm) adjustment - Model CCP cover plate

Maintenance

The Model F1FR Series sprinklers should be inspected and the sprinkler system maintained in accordance with NFPA 25. Do not clean sprinklers with soap and water, ammonia or any other cleaning fluids. Remove dust by using a soft brush or gentle vacuuming. Replace any sprinkler which has been painted (other than factory applied) or damaged in any way. A stock of spare sprinklers should be maintained to allow quick replacement of damaged or operated sprinklers.

Finishes [1]

Standard Finishes		
Sprinkler	**Escutcheon**	**Cover plate[1]**
Bronze	Brass	Chrome
Chrome Plated	Chrome	White
Polyester	Plated	
Coated [4][5][6]	White Painted	
Special Application Finishes		
Sprinkler	**Escutcheon**	**Cover plate[1]**
Electroless Nickel PTFE[7]	Electroless Nickel PTFE	Bright Brass
Bright Brass[3]	Bright Brass	Black Plating
Black Plated	Black Plated	Black Paint
Black Paint[2][6]	Black Paint	Off White
Off White[2][6]	Off White	Satin Chrome
Chrome Dull	Chrome Dull	

[1] Other finishes and colors are available on special order. Consult the factory for details. Custom color painted sprinklers may not retain their UL Corrosion resistance listing. Coverplate custom paint is semi-gloss, unless specified otherwise.

[2] cULus Listed only.

[3] 200°F (93°C) maximum.

[4] cULus listed "corrosion resistance" applies to SIN Numbers RA1435 (HSW), RA1485(VSW), RA1425 (Upright), RA1414 (Pendent) and RA1415 (Pendent) in standard black or white. Corrosion resistance in other polyester colors is available upon request.

[5] FM Approvals finish as "Polyester coated" applies to SIN Number RA1414, RA1435 and RA1425 in standard black or white.

[6] LPCB and VdS Approved finish applies only to RA1425, RA1414, RA1418 (VdS) and RA1475.

[7] cULus listed Corrosion Resistant

Material Data	
Frame:	DZR Brass, QM Brass, or Low Lead Brass
Deflector:	CDA Alloy 220, 260, or 510
Load Screw\Pintle:	CDA Alloy 360 or 544
Cup:	CDA Alloy 651 or 693
Washer:	Nickel Alloy 440 or 360, coated with PTFE Adhesive Tape
Bulb:	Glass

Ordering Information

Specify:

1. Sprinkler Model: [F1FR28][F1FR40][F1FR42][F1FR42LL][F1FRXLH][F1FR56][F1FR56LL]
2. Sprinkler Deflector/Orientation: [Pendent][Recessed Pendent][Upright][Conventional][Horizontal Sidewall][Recessed Horizontal Sidewall][Vertical Sidewall]
3. Sprinkler threads: [1/2-inch NPT][ISO 7-R1/2]
4. Sprinkler Temperature Rating: [135°F (57°C)][155°F (68°C)][175°F (79°C)][200°F (93°C)][286°F (141°C)]
5. Sprinkler Finish
6. Escutcheon Model: [F1][F2][FP]
7. Escutcheon Finish (where applicable)
8. Cover plate Model: [standard profile CCP 1/2-inch (12.7mm) adjustment][low profile CCP 5/16-inch (8.0mm) adjustment]
9. Cover plate Temperature Rating: [135°F (57°C) for use with Ordinary Temperature sprinklers][165°F (74°C) for use with Intermediate Temperature sprinklers]
10. Cover plate Finish

Note: When Model F1FR Series Recessed sprinklers are ordered, the sprinklers and escutcheons are packaged separately.

Reliable...For Complete Protection

Reliable offers a wide selection of sprinkler components. Following are some of the many precision-made Reliable products that guard life and property from fire around the clock.

- Automatic sprinklers
- Flush automatic sprinklers
- Recessed automatic sprinklers
- Concealed automatic sprinklers
- Adjustable automatic sprinklers
- Dry automatic sprinklers
- Intermediate level sprinklers
- Open sprinklers
- Spray nozzles
- Alarm valves
- Retarding chambers
- Dry pipe valves
- Accelerators for dry pipe valves
- Mechanical sprinkler alarms
- Electrical sprinkler alarm switches
- Water flow detectors
- Deluge valves
- Detector check valves
- Check valves
- Electrical system
- Sprinkler emergency cabinets
- Sprinkler wrenches
- Sprinkler escutcheons and guards
- Inspectors test connections
- Sight drains
- Ball drips and drum drips
- Control valve seals
- Air maintenance devices
- Air compressors
- Pressure gauges
- Identification signs
- Fire department connection

The equipment presented in this bulletin is to be installed in accordance with the latest published Standards of the National Fire Protection Association, Factory Mutual Research Corporation, or other similar organizations and also with the provisions of governmental codes or ordinances whenever applicable. Products manufactured and distributed by Reliable have been protecting life and property for over 90 years, and are installed and serviced by the most highly qualified and reputable sprinkler contractors located throughout the United States, Canada and foreign countries.

Manufactured by

Reliable®

Reliable Automatic Sprinkler Co., Inc.
(800) 431-1588 Sales Offices
(800) 848-6051 Sales Fax
(914) 829-2042 Corporate Offices
www.reliablesprinkler.com Internet Address

Recycled Paper

Revision lines indicate updated or new data.

EG. Printed in U.S.A. 12 /15 P/N 9999970300