18-AC79D1-7-EN

Installer's Guide

Condensing Units

4TTR3018–060

ALL phases of this installation must comply with NATIONAL, STATE AND LOCAL CODES

IMPORTANT — This Document is customer property and is to remain with this unit. Please return to service information pack upon completion of work.

These instructions do not cover all variations in systems or provide for every possible contingency to be met in connection with the installation. Should further information be desired or should particular problems arise which are not covered sufficiently for the purchaser's purposes, the matter should be referred to your installing dealer or local distributor.

Note: The manufacturer recommends installing only approved matched indoor and outdoor systems. All of the manufacture's split systems are A.H.R.I. rated only with TXV/EEV indoor systems. Some of the benefits of installing approved matched indoor and outdoor split systems are maximum efficiency, optimum performance and the best overall system reliability.

Table of Contents

Section 1. Safety 2
Section 2. Unit Location Considerations 3
Section 3. Unit Preparation 5
Section 4. Setting the Unit 5
Section 5. Refrigerant Line Considerations 5
Section 6. Refrigerant Line Routing 6
Section 7. Refrigerant Line Brazing 7
Section 8. Refrigerant Line Leak Check 9
Section 9. Evacuation 10
Section 10. Service Valves 11
Section 11. Electrical - Low Voltage 11
Section 12. Electrical - High Voltage 13
Section 13. Start Up 14
Section 14. System Charge Adjustment 15
Section 15. Checkout Procedures and Troubleshooting 19
Section 16. Refrigerant Circuits 22

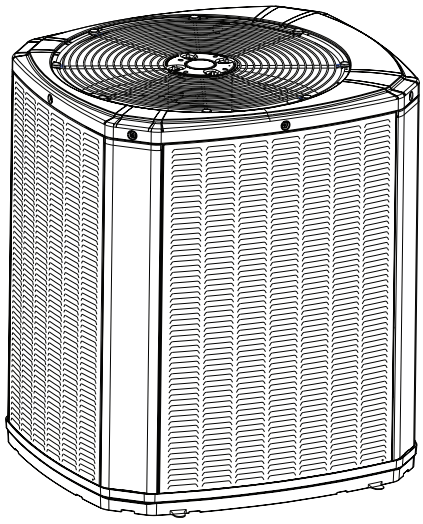

Section 1. Safety

⚠ WARNING

This information is intended for use by individuals possessing adequate backgrounds of electrical and mechanical experience. Any attempt to repair a central air conditioning product may result in personal injury and/or property damage. The manufacture or seller cannot be responsible for the interpretation of this information, nor can it assume any liability in connection with its use.

⚠ WARNING

These units use R-410A refrigerant which operates at 50 to 70% higher pressures than R-22. Use only R-410A approved service equipment. Refrigerant cylinders are painted a “Rose” color to indicate the type of refrigerant and may contain a “dip” tube to allow for charging of liquid refrigerant into the system. All R-410A systems use a POE oil that readily absorbs moisture from the atmosphere. To limit this “hygroscopic” action, the system should remain sealed whenever possible. If a system has been open to the atmosphere for more than 4 hours, the compressor oil must be replaced. Never break a vacuum with air and always change the driers when opening the system for component replacement. For specific handling concerns with R-410A and POE oil reference Retrofit Bulletins SS-APG006-EN and APP-APG011-EN or APP-APG012-EN.

⚠ WARNING

UNIT CONTAINS R-410A REFRIGERANT!
R-410A operating pressures exceed the limit of R-22. Proper service equipment is required. Failure to use proper service tools may result in equipment damage or personal injury.

SERVICE

USE ONLY R-410A REFRIGERANT AND APPROVED POE COMPRESSOR OIL.

⚠ WARNING

Extreme caution should be exercised when opening the Liquid Line Service Valve. Turn counterclockwise until the valve stem just touches the rolled edge. No torque is required. Failure to follow this warning will result in abrupt release of system charge and may result in personal injury and /or property damage.

⚠ WARNING

LIVE ELECTRICAL COMPONENTS!
During installation, testing, servicing, and troubleshooting of this product, it may be necessary to work with live electrical components. Failure to follow all electrical safety precautions when exposed to live electrical components could result in death or serious injury.

⚠ CAUTION

If using existing refrigerant lines make certain that all joints are brazed, not soldered.

⚠ CAUTION

Scroll compressor dome temperatures may be hot. Do not touch the top of compressor; it may cause minor to severe burning.

Section 2. Unit Location Considerations

2.1 Unit Dimensions and Weight

Table 2.1

Unit Dimensions and Weight		
Models	H x D x W (in)	Weight* (lb)
4TTR3018H	29 x 26 x 29	133
4TTR3024H	29 x 26 x 29	130
4TTR3030G	29 x 30 x 33	153
4TTR3036G	29 x 30 x 33	159
4TTR3042D	29 x 34 x 37	196
4TTR3048D	29 x 34 x 37	203
4TTR3060D	37 x 34 x 37	226

* Weight values are estimated.

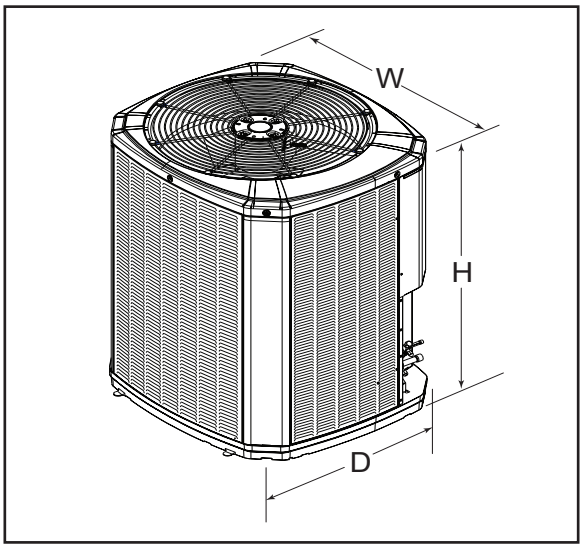

When mounting the outdoor unit on a roof, be sure the roof will support the unit's weight.

Properly selected isolation is recommended to alleviate sound or vibration transmission to the building structure.

2.2 Refrigerant Piping Limits

1. The maximum length of refrigerant lines from outdoor to indoor unit should NOT exceed sixty (60) feet.

2. The maximum vertical change should not exceed sixty (60) feet.

3. Service valve connection diameters are shown in Table 5.1.

Note: For line lengths greater than sixty (60) feet, Refer to Refrigerant Piping Application Guide, SS-APG006-EN or Refrigerant Piping Software Program, 32-3312-03 (or latest revision).

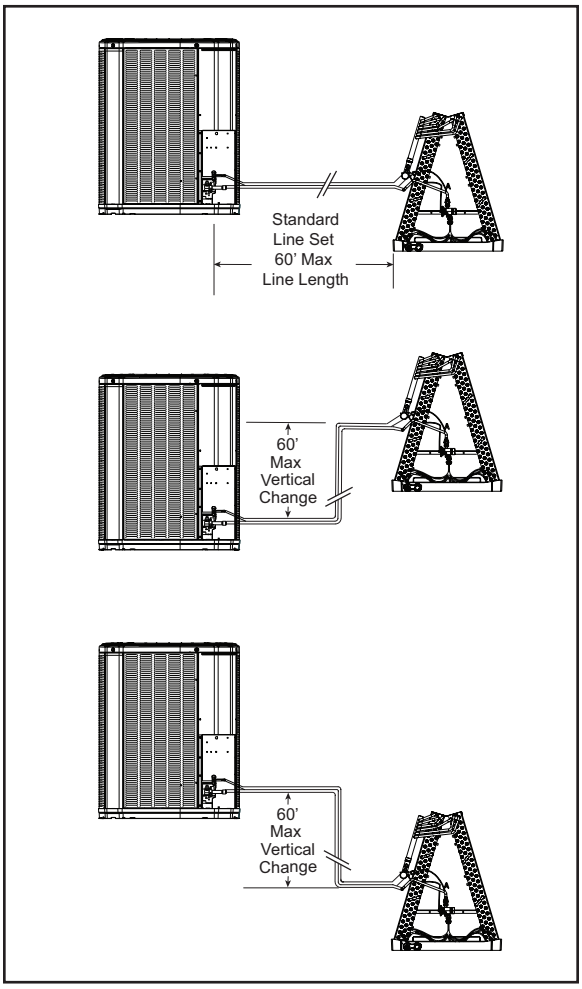

2.3 Suggested Locations for Best Reliability

Ensure the top discharge area is unrestricted for at least five (5) feet above the unit.

Three (3) feet clearance must be provided in front of the control box (access panels) and any other side requiring service.

Do not locate close to bedrooms as operational sounds may be objectionable.

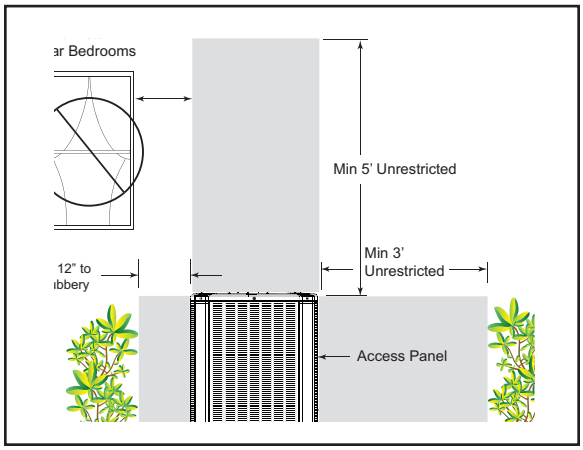

Position the outdoor unit a minimum of 12” from any wall or surrounding shrubbery to ensure adequate airflow.

Outdoor unit location must be far enough away from any structure to prevent excess roof runoff water from pouring directly on the unit.

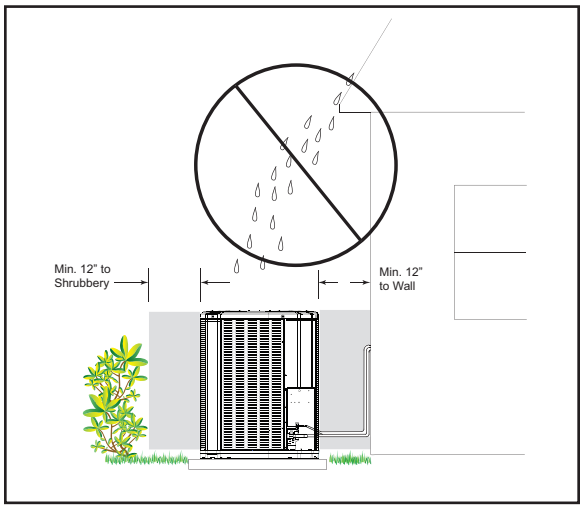

2.4 Coastal Considerations

If installed within one mile of salt water, including seacoasts and inland waterways, models without factory supplied Seacoast Salt Shields require the addition of BAYSEAC001 (Seacoast Kit) at installation time.

Section 3. Unit Preparation

3.1 Prepare The Unit For Installation

STEP 1 - Check for damage and report promptly to the carrier any damage found to the unit.

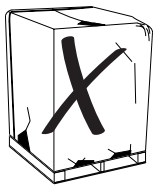

STEP 2 - To remove the unit from the pallet, remove tabs by cutting with a sharp tool.

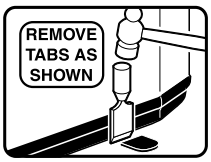

Section 4. Setting the Unit

4.1 Pad Installation

When installing the unit on a support pad, such as a concrete slab, consider the following:

- The pad should be at least 1” larger than the unit on all sides.
- The pad must be separate from any structure.
- The pad must be level.
- The pad should be high enough above grade to allow for drainage.
- The pad location must comply with National, State, and Local codes.

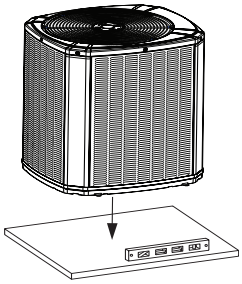

Section 5. Refrigerant Line Considerations

5.1 Refrigerant Line and Service Valve Connection Sizes

Table 5.1

	Line Sizes		Service Valve Connection Sizes	
Model	Vapor Line	Liquid Line	Vapor Line Connection	Liquid Line Connection
4TTR3018H	3/4	3/8	3/4	3/8
4TTR3024H	3/4	3/8	3/4	3/8
4TTR3030G	3/4	3/8	3/4	3/8
4TTR3036G	3/4	3/8	3/4	3/8
4TTR3042D	3/4	3/8	3/4	3/8
4TTR3048D	7/8	3/8	7/8	3/8
4TTR3060D	7/8	3/8	7/8	3/8

5.2 Factory Charge

Trane outdoor condensing units are factory charged with the system charge required for the outdoor condensing unit, fifteen (15) feet of tested connecting line, and the smallest indoor evaporative coil match. **If connecting line length exceeds fifteen (15) feet and/or a larger indoor evaporative coil is installed, then final refrigerant charge adjustment is necessary. See table for line length adders.**

TUBING INFORMATION						
LINE TYPE		REFRIGERANT TO ADD AT SPECIFIED ADDITIONAL LENGTH				
Suction Line	**Liquid Line**	**20 ft**	**30 ft**	**40 ft**	**50 ft**	**60 ft**
3/4”	3/8"	3 oz	9 oz	15 oz	21 oz	27 oz
7/8"	3/8"	3 oz	9 oz	16 oz	22 oz	28 oz

5.3 Required Refrigerant Line Length

Determine required line length and lift. You will need this later in STEP 2 of Section 14.

Total Line Length = _____ Ft.

Total Vertical Change (lift) = _____ Ft.

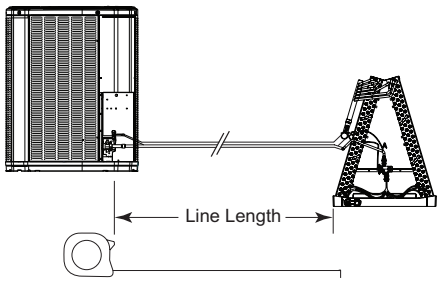

5.4 Refrigerant Line Insulation

Important: *The Vapor Line must always be insulated. DO NOT allow the Liquid Line and Vapor Line to come in direct (metal to metal) contact.*

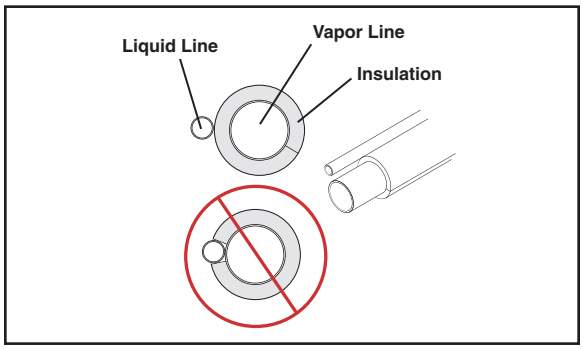

5.5 Reuse Existing Refrigerant Lines

⚠ CAUTION

If using existing refrigerant lines make certain that all joints are brazed, not soldered.

For retrofit applications, where the existing indoor evaporator coil and/or refrigerant lines will be used, the following precautions should be taken:

- Ensure that the indoor evaporator coil and refrigerant lines are the correct size.
- Ensure that the refrigerant lines are free of leaks, acid, and oil.

Important: *For more information see publication number SS-APG006-EN.*

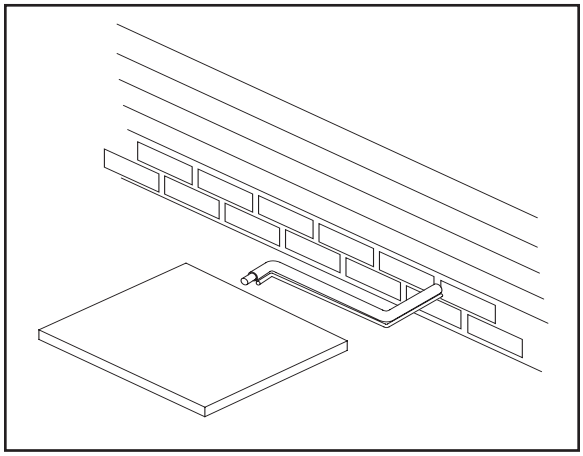

Section 6. Refrigerant Line Routing

6.1 Precautions

Important: *Take precautions to prevent noise within the building structure due to vibration transmission from the refrigerant lines.*

Comply with National, State, and Local Codes when isolating line sets from joists, rafters, walls, or other structural elements.

For Example:

- When the refrigerant lines have to be fastened to floor joists or other framing in a structure, use isolation type hangers.
- Isolation hangers should also be used when refrigerant lines are run in stud spaces or enclosed ceilings.
- Where the refrigerant lines run through a wall or sill, they should be insulated and isolated.
- Isolate the lines from all ductwork.
- Minimize the number of 90º turns.

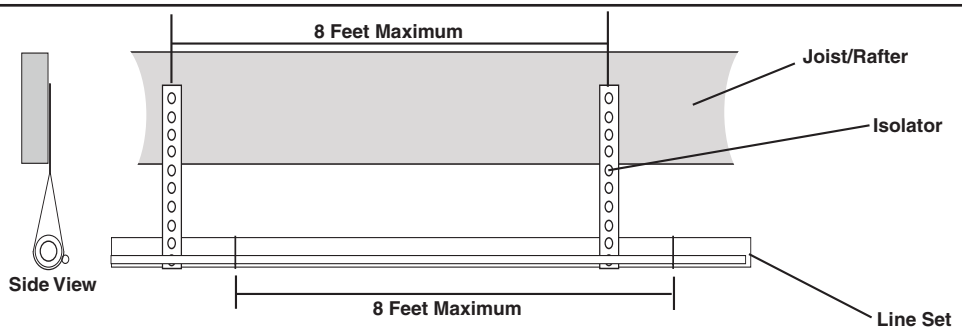

Secure Vapor line from joists using isolators every 8 ft. Secure Liquid Line directly to Vapor line using tape, wire, or other appropriate method every 8 ft.

Isolation From Joist/Rafter

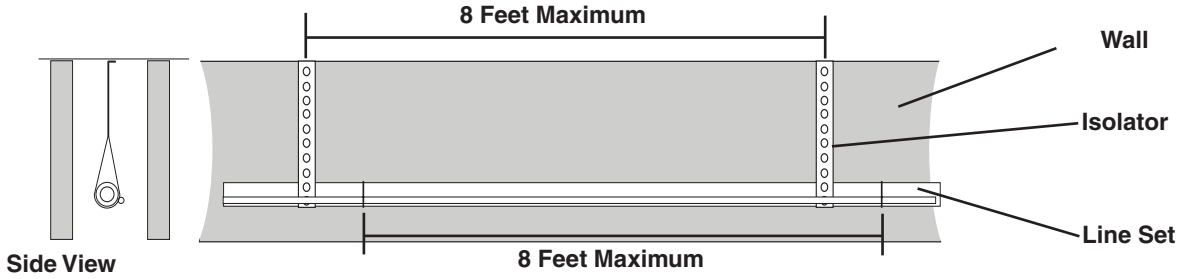

Secure Vapor Line using isolators every 8 ft. Secure Liquid Line directly to Vapor Line using tape, wire, or other appropriate method every 8 ft.

Isolation In Wall Spaces

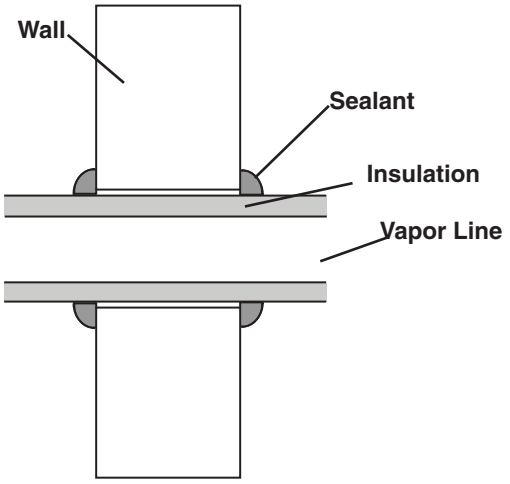

Isolation Through Wall

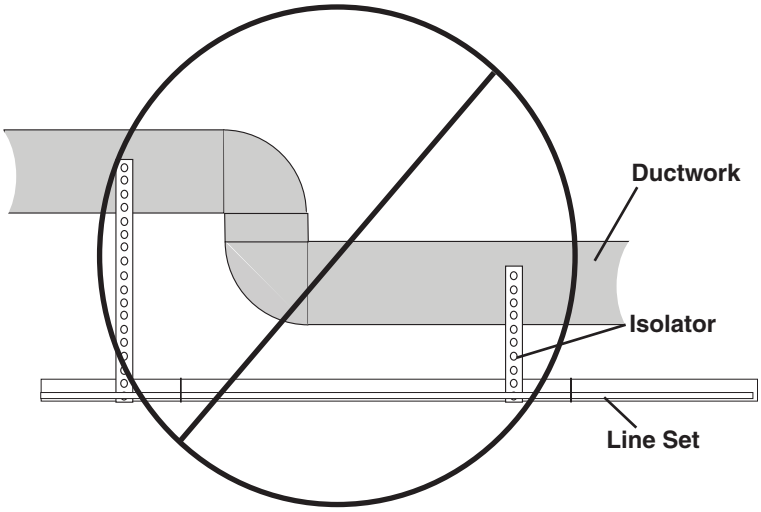

DO NOT hang line sets from ductwork

Section 7. Refrigerant Line Brazing

7.1 Braze The Refrigerant Lines

STEP 1 - Remove caps or plugs. Use a deburing tool to debur the pipe ends. Clean both internal and external surfaces of the tubing using an emery cloth.

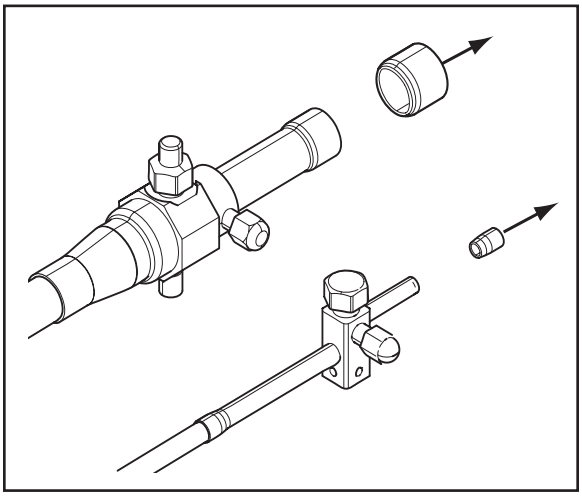

STEP 2 - Remove the pressure tap cap and valve cores from both service valves.

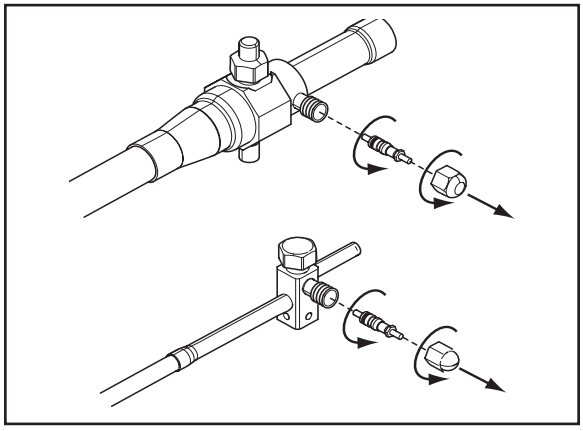

STEP 3 - Purge the refrigerant lines and indoor coil with dry nitrogen.

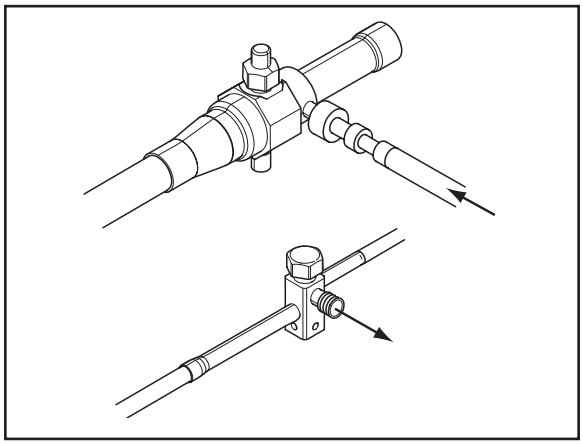

STEP 4 - Wrap a wet rag around the valve body to avoid heat damage and continue the dry nitrogen purge.

Braze the refrigerant lines to the service valves.

For units shipped with a field-installed external drier, check liquid line filter drier's directional flow arrow to confirm correct direction of refrigeration flow (away from outdoor unit and toward evaporator coil) as illustrated. Braze the filter drier to the Liquid Line.

Continue the dry nitrogen purge. Do not remove the wet rag until all brazing is completed.

Important: Remove the wet rag before stopping the dry nitrogen purge.

Note: *Install drier in Liquid Line.*

NOTE: **Precautions should be taken to avoid heat damage to basepan during brazing. It is recommended to keep the flame directly off of the basepan.**

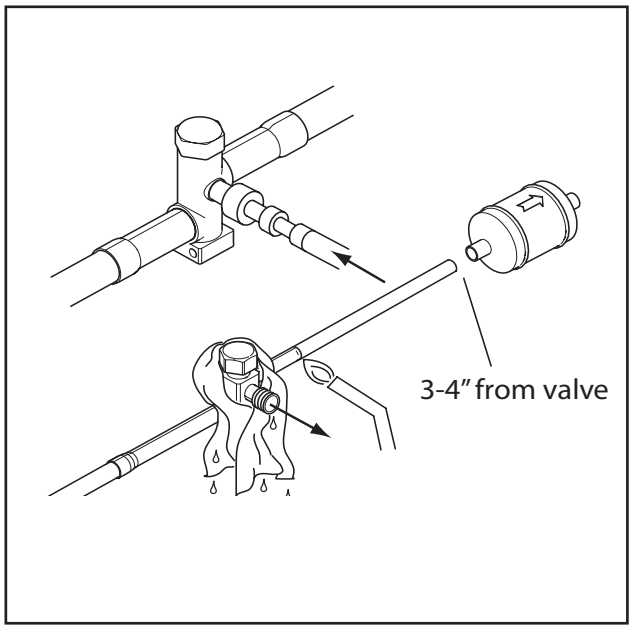

STEP 5 - Replace the pressure tap valve cores after the service valves have cooled.

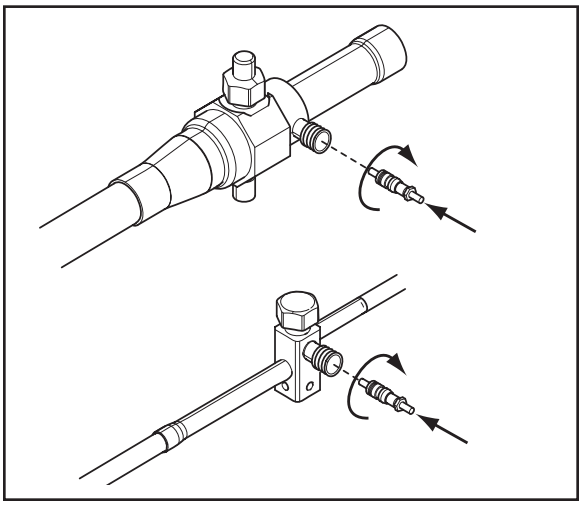

Section 8. Refrigerant Line Leak Check

8.1 Check For Leaks

STEP 1 - Pressurize the refrigerant lines and evaporator coil to 150 PSIG using dry nitrogen.

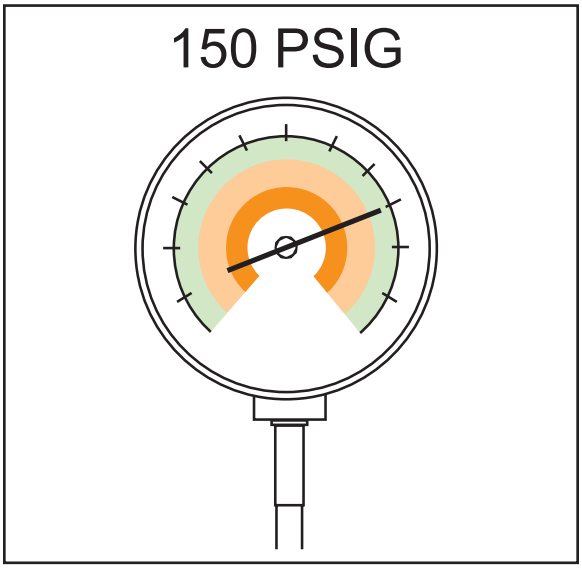

STEP 2 - Check for leaks by using a soapy solution or bubbles at each brazed location.

Remove nitrogren pressure and repair any leaks before continuing.

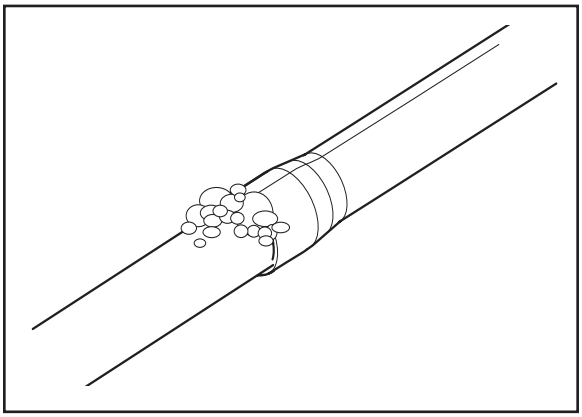

Section 9. Evacuation

9.1 Evacuate the Refrigerant Lines and Indoor Coil

Important: *Do not open the service valves until the refrigerant lines and indoor coil leak check and evacuation are complete.*

STEP 1 - Evacuate until the micron gauge reads no higher than 350 microns, then close off the valve to the vacuum pump.

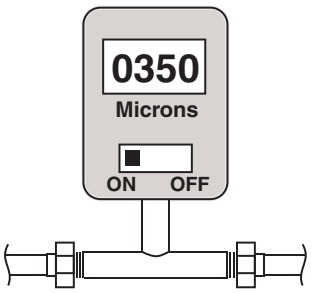

STEP 2 - Observe the micron gauge. Evacuation is complete if the micron gauge does not rise above 500 microns in one (1) minute.

Once evacuation is complete blank off the vacuum pump and micron gauge, and close the valves on the manifold gauge set.

Section 10. Service Valves

10.1 Open the Gas Service Valve

Important: *Leak check and evacuation must be completed before opening the service valves.*

NOTE: Do not vent refrigerant gases into the atmosphere

STEP 1 - Remove valve stem cap.

STEP 2 - Using an adjustable wrench, turn valve stem 1/4 turn counterclockwise to the fully open position.

STEP 3 - Replace the valve stem cap to prevent leaks. Tighten finger tight plus an additional 1/6 turn.

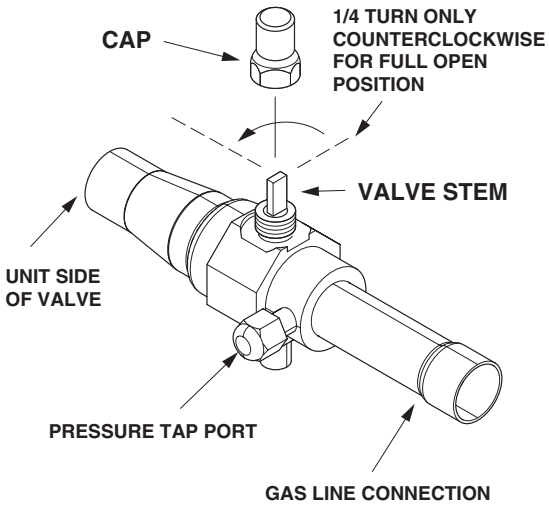

10.2 Open the Liquid Service Valve

⚠ WARNING

Extreme caution should be exercised when opening the Liquid Line Service Valve. Turn counterclockwise until the valve stem just touches the rolled edge. No torque is required. Failure to follow this warning will result in abrupt release of system charge and may result in personal injury and /or property damage.

Important: *Leak check and evacuation must be completed before opening the service valves.*

STEP 1 - Remove service valve cap.

STEP 2 - Fully insert 3/16" hex wrench into the stem and back out counterclockwise until valve stem just touches the rolled edge (approximately five (5) turns.)

STEP 3 - Replace the valve cap to prevent leaks. Tighten finger tight plus an additional 1/6 turn.

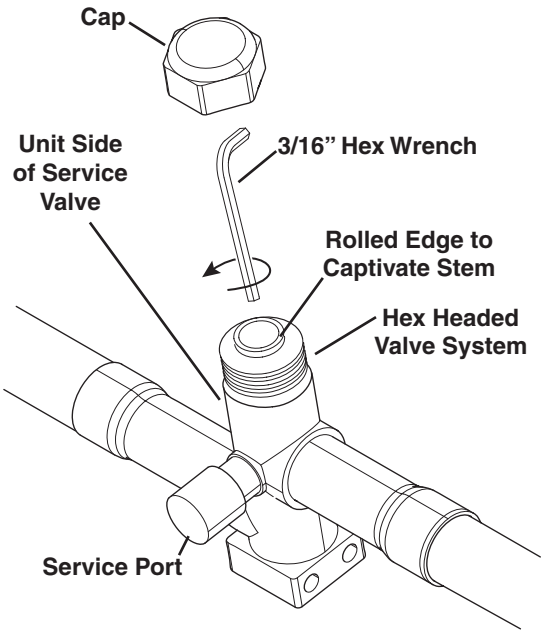

Section 11. Electrical - Low Voltage

11.1 Low Voltage Maximum Wire Length

Table 11.1 defines the maximum total length of low voltage wiring from the outdoor unit, to the indoor unit, and to the thermostat.

Table 11.1

24 VOLTS	
WIRE SIZE	MAX. WIRE LENGTH
18 AWG	150 Ft.
16 AWG	225 Ft.
14 AWG	300 Ft.

11.2 Low Voltage Hook-up Diagrams

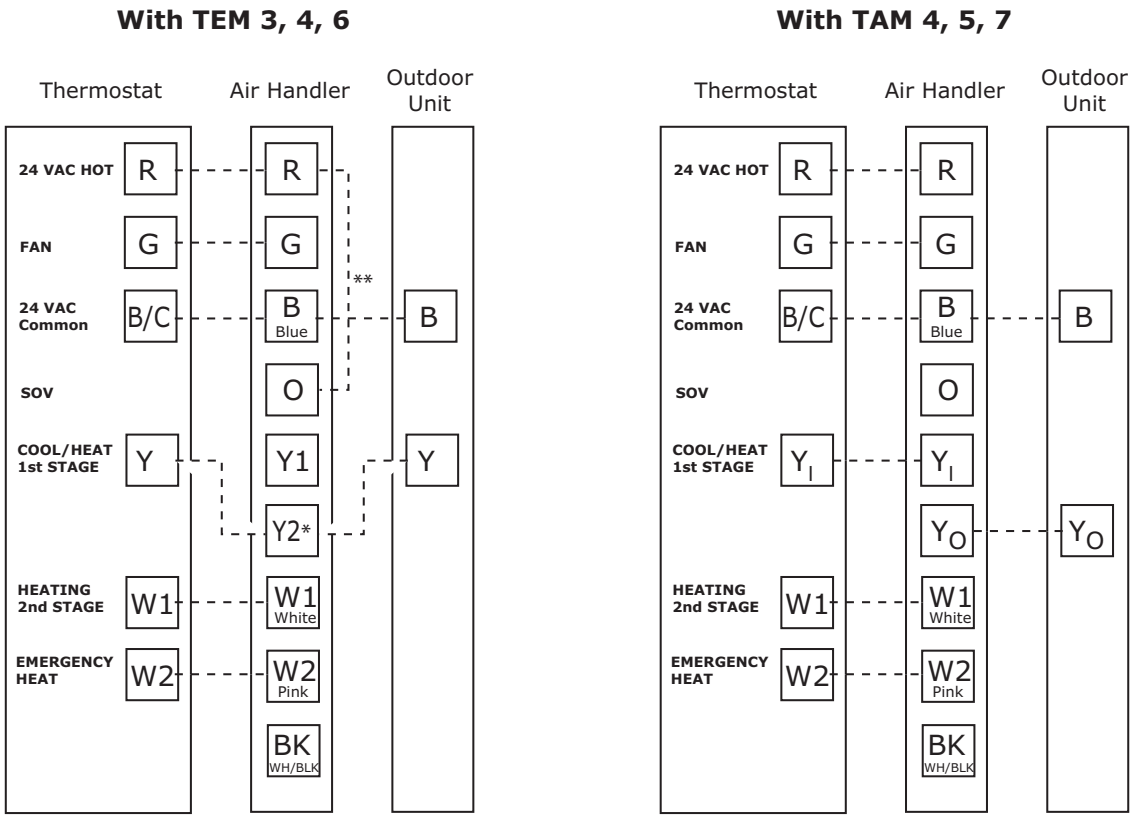

- Units with pigtails require wirenuts for connections. Cap all unused wires.
- For any BK enabled comfort control, do not connect Y1 or Y2 at the air handler.
- In AC systems for multiple stages of electric heat, jumper W1 and W2 together if comfort control has only one stage of heat.

* Y for TEM3 and TEM4

** Only applies for TEM6

Section 12. Electrical - High Voltage

12.1 High Voltage Power Supply

⚠ WARNING

LIVE ELECTRICAL COMPONENTS!
During installation, testing, servicing, and troubleshooting of this product, it may be necessary to work with live electrical components. Failure to follow all electrical safety precautions when exposed to live electrical components could result in death or serious injury.

The high voltage power supply must agree with the equipment nameplate.

Power wiring must comply with national, state, and local codes.

Follow instructions on unit wiring diagram located on the inside of the control box cover and in the Service Facts document included with the unit.

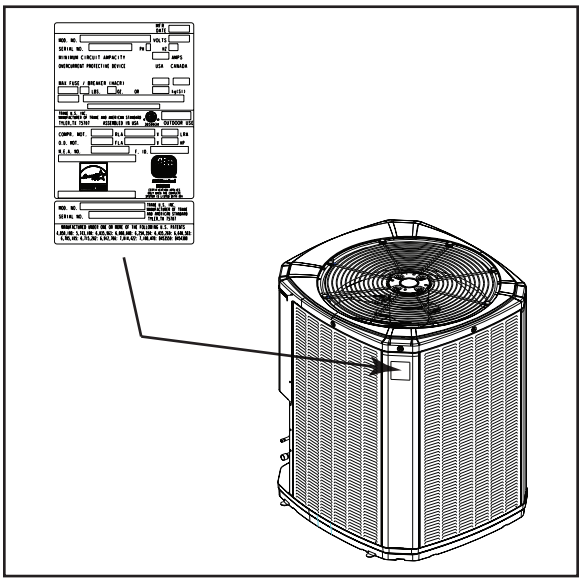

12.2 High Voltage Disconnect Switch

Install a separate disconnect switch at the outdoor unit.

For high voltage connections, flexible electrical conduit is recommended whenever vibration transmission may create a noise problem within the structure.

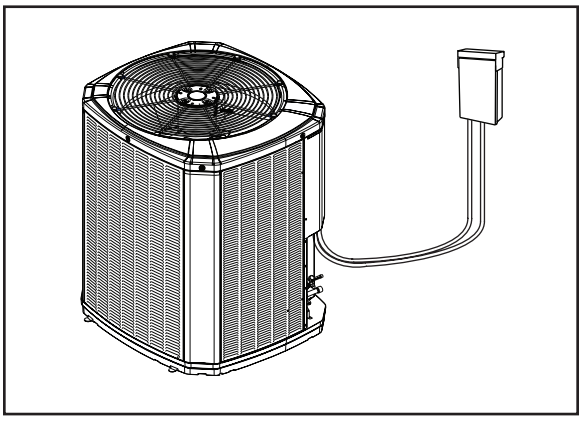

12.3 High Voltage Ground

Ground the outdoor unit per national, state, and local code requirements.

Section 13. Start Up

13.1 System Start Up

STEP 1 - Ensure Sections 7 through 12 have been completed.

STEP 2 - Set System Thermostat to OFF.

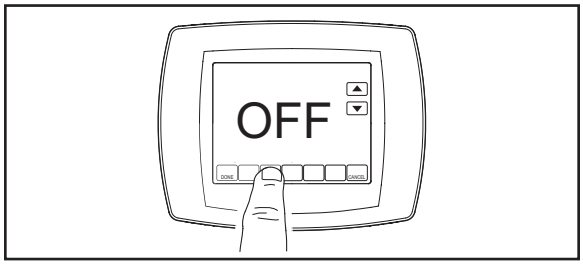

STEP 3 - Turn on disconnect(s) to apply power to the indoor and outdoor units.

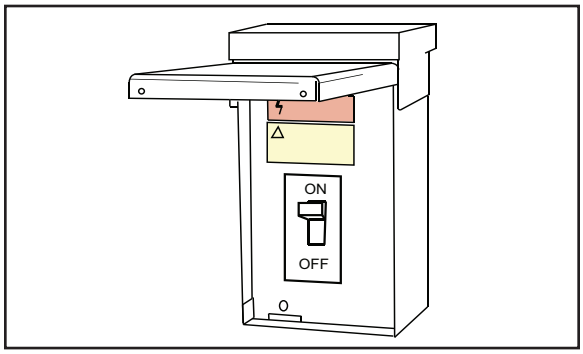

STEP 4 - Wait one (1) hour before starting the unit if compressor crankcase heater accessory is used and the Outdoor Ambient is below 70ºF.

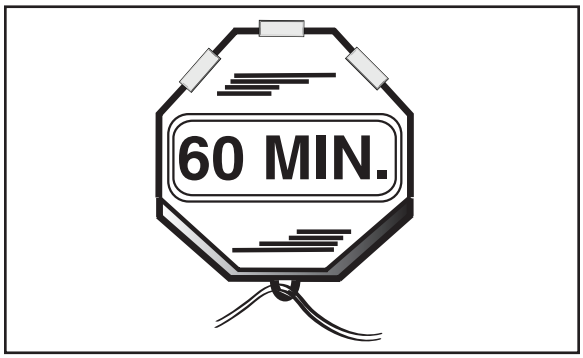

STEP 5 - Set system thermostat to ON.

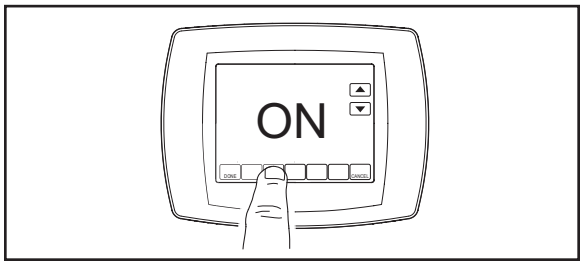

Section 14. System Charge Adjustment

14.1 Temperature Measurements

STEP 1 - Check the outdoor temperatures.

Subcooling (in cooling mode) is the only recommended method of charging above 55° F ambient outdoor temperature.

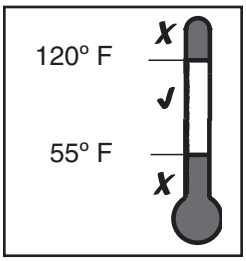

Outdoor Temp

For best results the indoor temperature should be kept between 70° F to 80° F.

Note: It is important to return in the spring or summer to accurately charge the system in the cooling mode when outdoor ambient temperature is above 55° F.

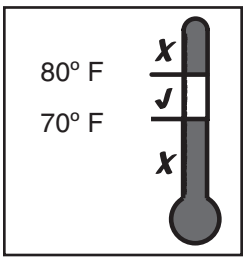

Indoor Temp

14.2 Subcooling Charging in Cooling (Above 55° F Outdoor Temp.)

STEP 1 - Use the refrigerant line total length and lift measurements from Section 5 and use line length adders as shown in Section 5.2 if required.

Total Line Length = _____ Ft.

Vertical Change (Lift) = _____ Ft.

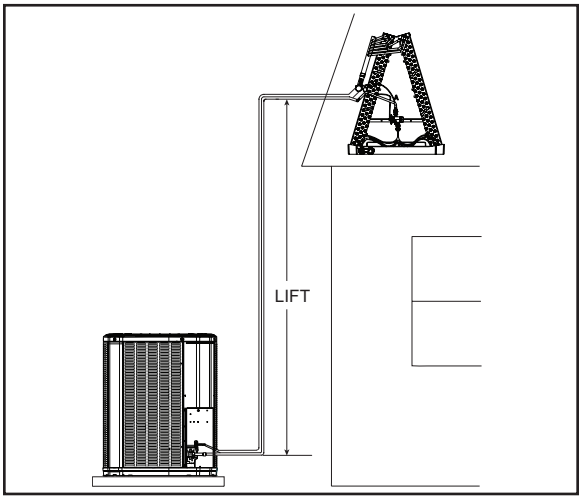

STEP 2 - Determine the final subcooling value using total Line Length and Lift measured in STEP 1 and the charts below.

1 1/2 Ton

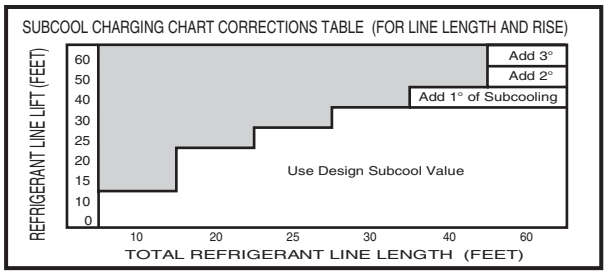

2 Ton

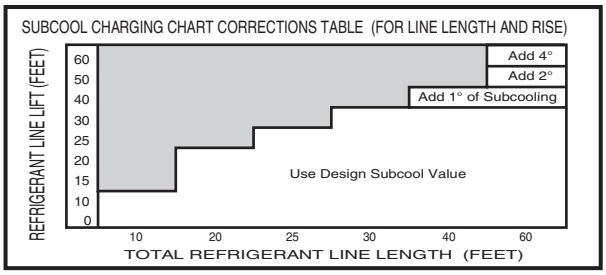

2 1/2 Ton

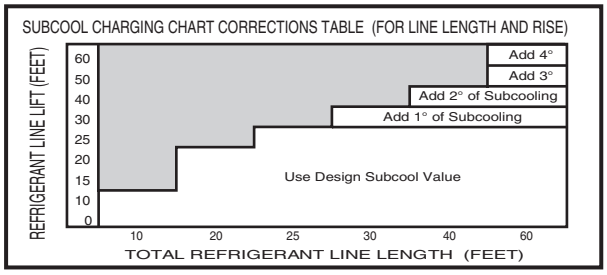

3 Ton

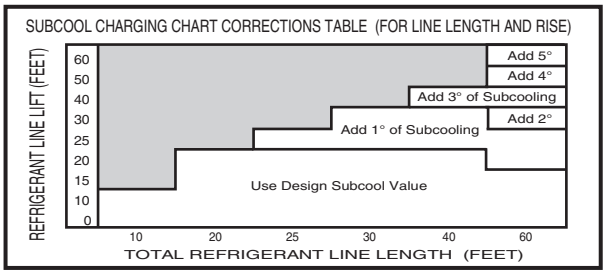

3 1/2 Ton

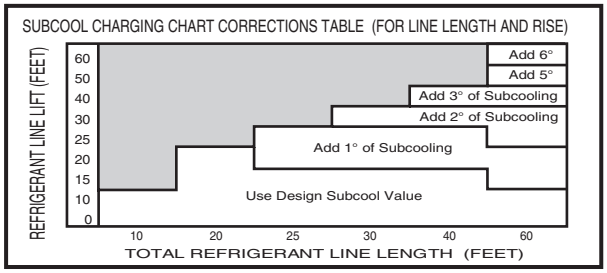

4 Ton

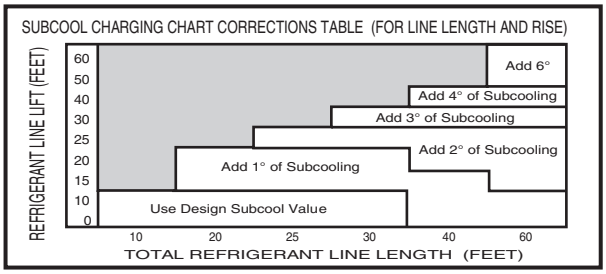

5 Ton

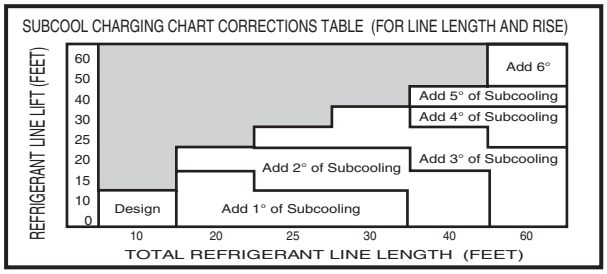

Design Subcooling Value = _____° F
(from nameplate or Service Facts)

Subcooling Correction = _____° F

Final Subcooling Value = _____° F

STEP 3 - Stabilize the system by operating for a minimum of 20 minutes.

At startup, or whenever charge is removed or added, the system must be operated for a minimum of 20 minutes to stabilize before accurate measurements can be made.

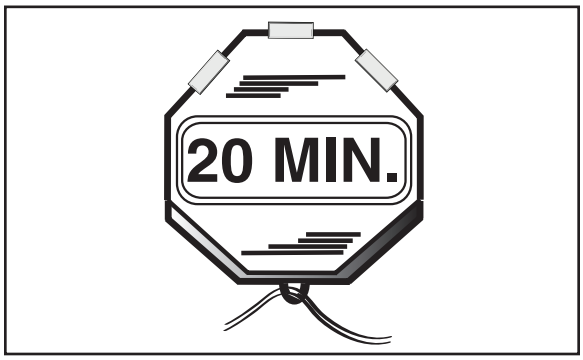

STEP 4 - Measure the liquid line temperature and pressure at the outdoor unit's service valve.

Measured Liquid Line Temp = _____ ° F

Liquid Gage Pressure = _____ PSI

Final Subcooling Value = _____ ° F

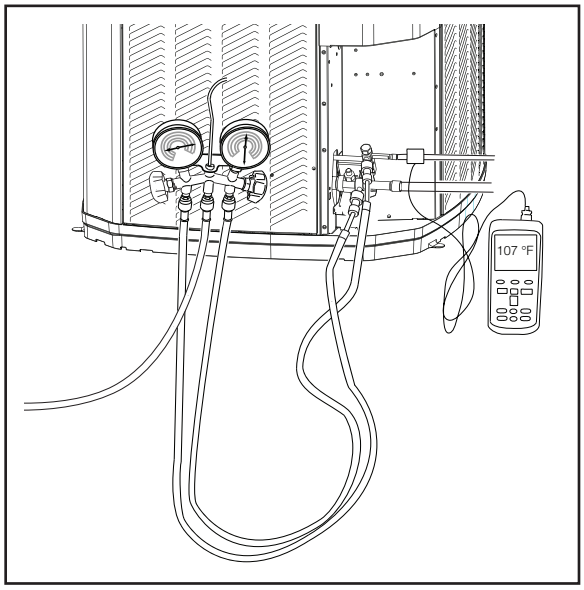

STEP 5 - Use the final subcooling value, refrigerant temperature and pressure from STEP 4, to determine the proper liquid gage pressure using Table 14.2.

Example: Assume a 12° F Final Subcooling value and liquid temp of 90° F.

1. Locate 12° F Final Subcooling in Table 14.2.
2. Locate the Liquid Temperarature (90° F) in the left column.
3. The Liquid Gage Pressure should be approximately 327 PSI. (This is the shown as the intersection of the Final Subcooling column and the Liquid Temperature row.

Table 14.2

R-410A REFRIGERANT CHARGING CHART							
LIQUID TEMP (°F)	FINAL SUBCOOLING (°F)						
	8	9	10	11	12	13	14
	LIQUID GAGE PRESSURE (PSI)						
55	179	182	185	188	191	195	198
60	195	198	201	204	208	211	215
65	211	215	218	222	225	229	232
70	229	232	236	240	243	247	251
75	247	251	255	259	263	267	271
80	267	271	275	279	283	287	291
85	287	291	296	300	304	309	313
90	309	313	318	322	327	331	336
95	331	336	341	346	351	355	360
100	355	360	365	370	376	381	386
105	381	386	391	396	402	407	413
110	407	413	418	424	429	435	441
115	435	441	446	452	458	464	470
120	464	470	476	482	488	495	501
125	495	501	507	514	520	527	533

From Dwg. D154557P01 Rev. 3

STEP 6 - Adjust refrigerant level to attain proper gage pressure.

Add refrigerant if the Liquid Gage Pressure is lower than the chart value.

1. Connect gages to refrigerant bottle and unit as illustrated.
2. Purge all hoses.
3. Open bottle.
4. Stop adding refrigerant when liquid line temperature and Liquid Gage Pressure matches the charging chart Final Subcooling value.

Recover refrigerant if the Liquid Gage Pressure is higher than the chart value.

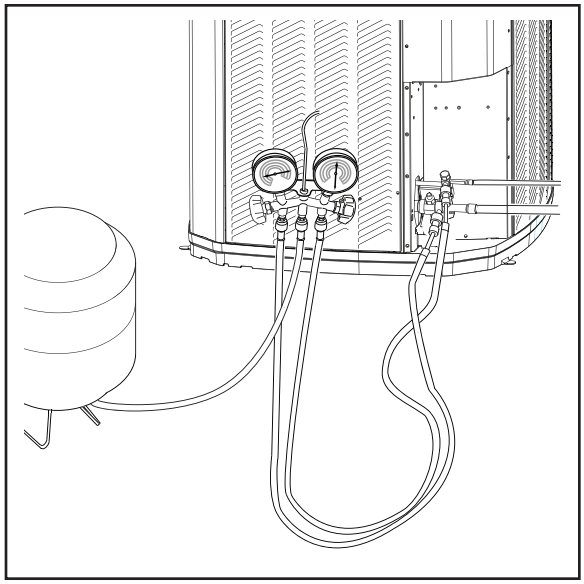

STEP 7 - Stabilize the system.

1. Wait 20 minutes for the system condition to stabilize between adjustments.

Note: When the Liquid Line Temperature and Gage Pressure approximately match the chart, the system is properly charged.

2. Remove gages.
3. Replace service port caps to prevent leaks. Tighten finger tight plus an additional 1/6 turn.

STEP 8 - Verify typical performance.

Refer to System Pressure Tables to verify typical performance.

(Example only - see Pressure Tables)

R-410A REFRIGERANT CHARGING CHART							
LIQUID TEMP (°F)	DESIGN SUBCOOLING (°F)						
	8	9	10	11	12	13	14
	LIQUID GAGE PRESSURE (PSI)						
55	179	182	185	188	191	195	198
60	195	198	201	204	208	211	215
65	211	215	218	222	225	229	232
70	229	232	236	240	243	247	251
75	247	251	255	259	263	267	271
80	267	271	275	279	283	287	291
85	287	291	296	300	304	309	313
90	309	313	318	322	327	331	336
95	331	336	341	346	351	355	360
100	355	360	365	370	376	381	386
105	381	386	391	396	402	407	413
110	407	413	418	424	429	435	441
115	435	441	446	452	458	464	470
120	464	470	476	482	488	495	501
125	495	501	507	514	520	527	533
Refer to Service Facts or Installer's Guide for charging method.							

OD 13/14 SEER AC only		18	24/25	30/31	36/37	42/43	48	60
OD Temp	ID Wet Bulb	Suction Pressure						
110	71	160	159	156	157	158	154	158
	67	154	152	150	149	150	148	148
	63	148	144	144	142	142	140	140
	59	142	137	138	135	135	132	132
100	71	156	155	152	153	154	152	154
	67	150	148	146	145	147	144	146
	63	144	141	140	138	138	136	138
	59	138	134	134	132	131	130	130
90	71	152	152	150	149	152	148	150
	67	146	145	144	143	143	142	142

STEP 9 - Record System Information for reference.

Record system pressures and temperatures after charging is complete.

Outdoor model number = _____

Measured Outdoor Ambient = _____ ° F

Measured Indoor Ambient = _____ ° F

Measured Liquid Line Temp = _____ ° F

Measured Suction Line Temp = _____ ° F

Liquid Gage Pressure = _____ PSI

Suction Gage Pressure = _____ PSI

Section 15. Checkout Procedures and Troubleshooting

15.1 Operational And Checkout Procedures

Final phases of this installation are the unit Operational and Checkout Procedures. To obtain proper performance, all units must be operated and charge adjustments made.

Important: *Perform a final unit inspection to be sure that factory tubing has not shifted during shipment. Adjust tubing if necessary so tubes do not rub against each other when the unit runs. Also be sure that wiring connections are tight and properly secured.*

CHECKOUT PROCEDURE

After installation has been completed, it is recommended that the entire system be checked against the following list:

1. Leak check refrigerant lines. ..... [ ]
2. Properly insulate suction lines and fittings..... [ ]
3. Properly secure and isolate all refrigerant lines..... [ ]
4. Seal passages through masonry.
   If mortar is used, prevent mortar from coming into direct contact with copper tubing. ..... [ ]
5. Verify that all electrical connections are tight..... [ ]
6. Observe outdoor fan during on cycle for clearance and smooth operation..... [ ]
7. Be sure that indoor coil drain line drains freely. Pour water into drain pan..... [ ]
8. Be sure that supply registers and return grilles are open and unobstructed..... [ ]
9. Be sure that a return air filter is installed. ..... [ ]
10. Be sure that the correct airflow setting is used. (Indoor blower motor) ..... [ ]
11. Operate complete system in each mode to ensure safe operation..... [ ]

TROUBLESHOOTING

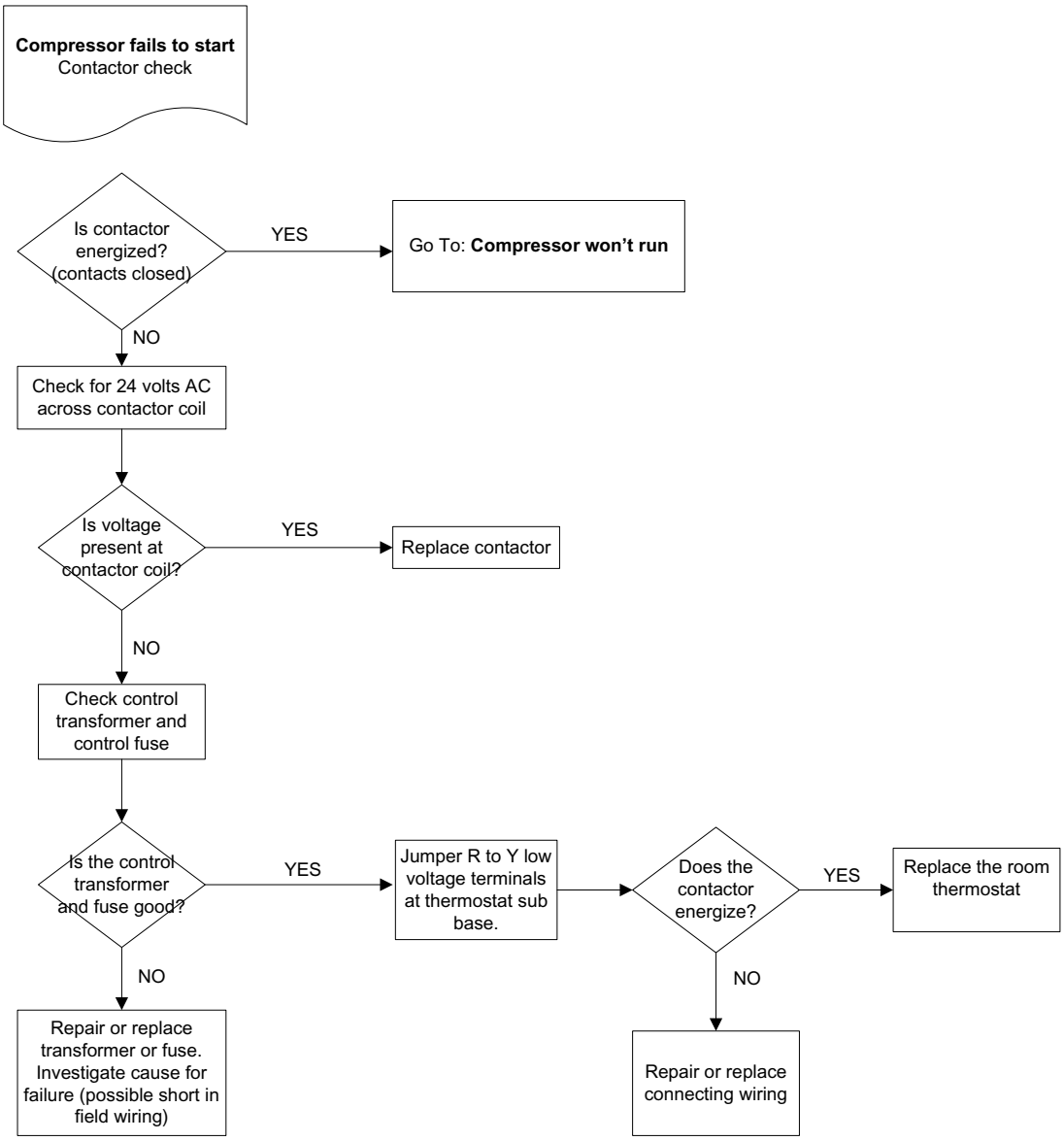

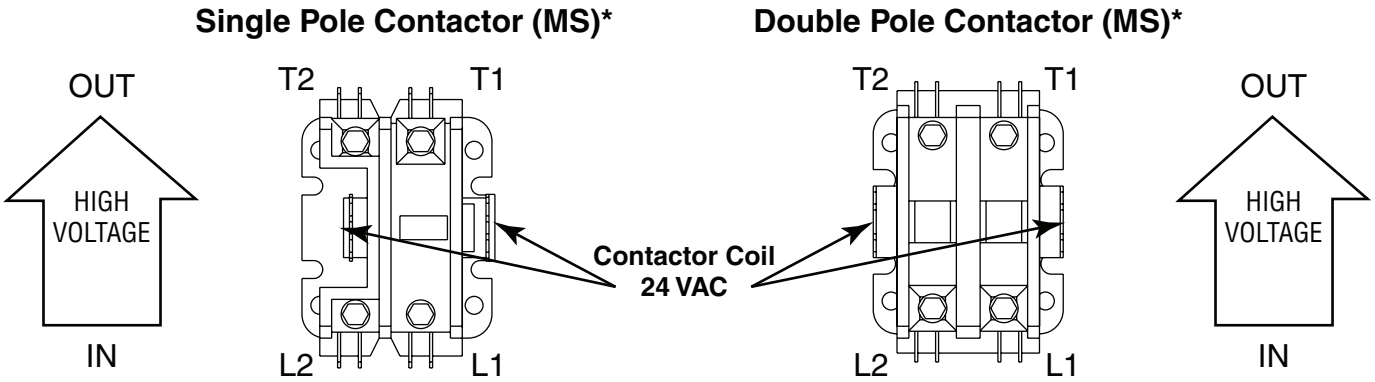

*Refer to Wiring Diagram to determine if a single pole or double pole contactor is used.

TROUBLESHOOTING

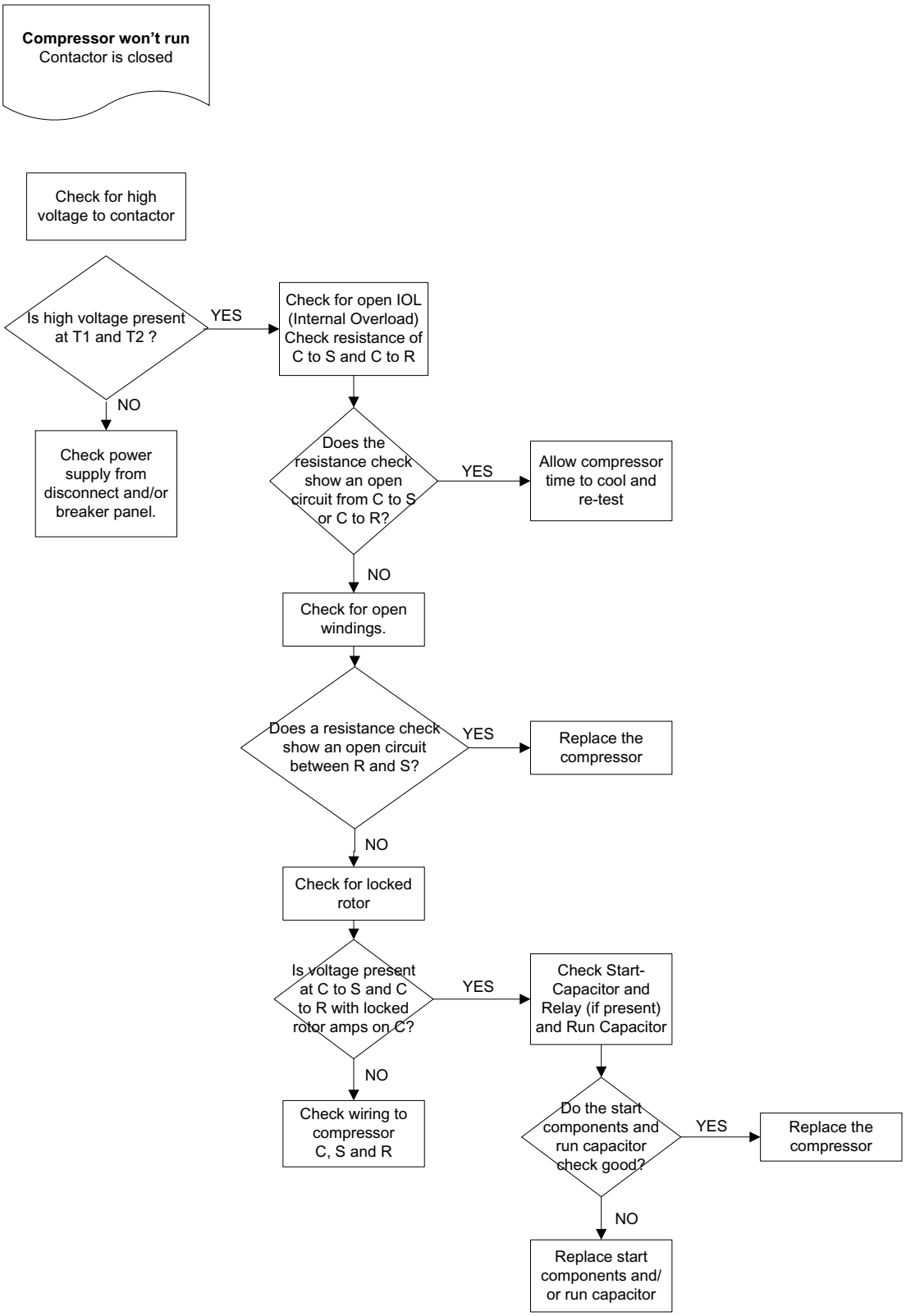

SYSTEM FAULTS		WHAT TO CHECK MODE	HIGH VOLTAGE WIRING	POWER SUPPLY	COMPRESSOR IOL	RUN CAPACITOR	START CAPACITOR	START RELAY	CONTACTOR CONTACTS	LOW VOLTAGE WIRING	CONTROL TRANSFORMER	THERMOSTAT	CONTACTOR COIL	LOW VOLTAGE FUSE	STUCK COMPRESSOR	INEFFICIENT COMP.	REF. UNDERCHARGE	REF. OVERCHARGE	EXCESSIVE EVAP. LOAD	NONCONDENSABLES	RES. O.D. AIRFLOW	O.D. AIR RECIRCULATION	TXV/EEV STUCK OPEN	SUPERHEAT	RES. I.D. AIRFLOW	REF. CIR. RESTRICTIONS	SOV LEAKING	SOV COIL DEFECTIVE	CHECK VALVE LEAKING	*DEFROST RELAY DEF.	DEFROST CONTROL DEF.
REFRIGERANT CIRCUIT																															
Head Pressure Too High	C																		P	P	S	P	S				S				
	H																		P	P	S					P	S				
Head Pressure Too Low	C																S	P						S	S		S	S	S	P	
	H																S	P						S	S		S	S		P	
Suction Pressure Too High	C																S		P	P					S			P		P	
	H																S								S			P			
Suction Pressure Too Low	C																	P							S	P	S		S		
	H																	P				S	S		S		S				
Liquid Refrig. Floodback (TXV/EEV)	C																							P						P	
	H																							P						P	
Liquid Refrig. Floodback (Cap. Tube)	C																		P			S	S		S	P					
	H																		P			S	S		S				S		
I.D. Coil Frosting	C																	P				S	S								
	H																														
Compressor Runs Inadequate or No Cooling/Htg	C																S	P		S	S				S	P	S	S	S	S	
	H																S	P			S				S	P	S	S		S	
ELECTRICAL																															
Compressor & O.D. Fan Won't Start	C	P	P						S	P	S	P	P																		
	H	P	P						S	P	S	P	P																		
Compressor Will Not Start But O.D. Fan Runs	C		P	S	P	S	S	S						P																	
	H		P	S	P	S	S	S						P																	
O.D. Fan Won't Start	C		P		P			S																							
	H		P		P			S																							
Compressor Hums But Won't Start	C				P	S	S	S						P																	
	H				P	S	S	S						P																	
Compressor Cycles on IOL	C		P	S	P	S	S	S						P	S	P	P	S		S	S			S			S				
	H		P	S	P	S	S	S						P	S	P	P	S		S				S	P		S				
I.D. Blower Won't Start	C	P	P						S	P	S		S																		
	H	P	P						S	P	S		S																		
DEFROST																															
Unit Won't Initiate Defrost	C																														
	H																												P		P	P
Defrost Terminates on Time	C																														
	H																	P														P
Unit Icing Up	C																														
	H																	P				S	S			S			P			P

C - Cooling H - Heating P - Primary Causes S - Secondary Causes * - 3 Phase Only

16.0 Refrigerant Circuits

018, 024, 030, 042 Units

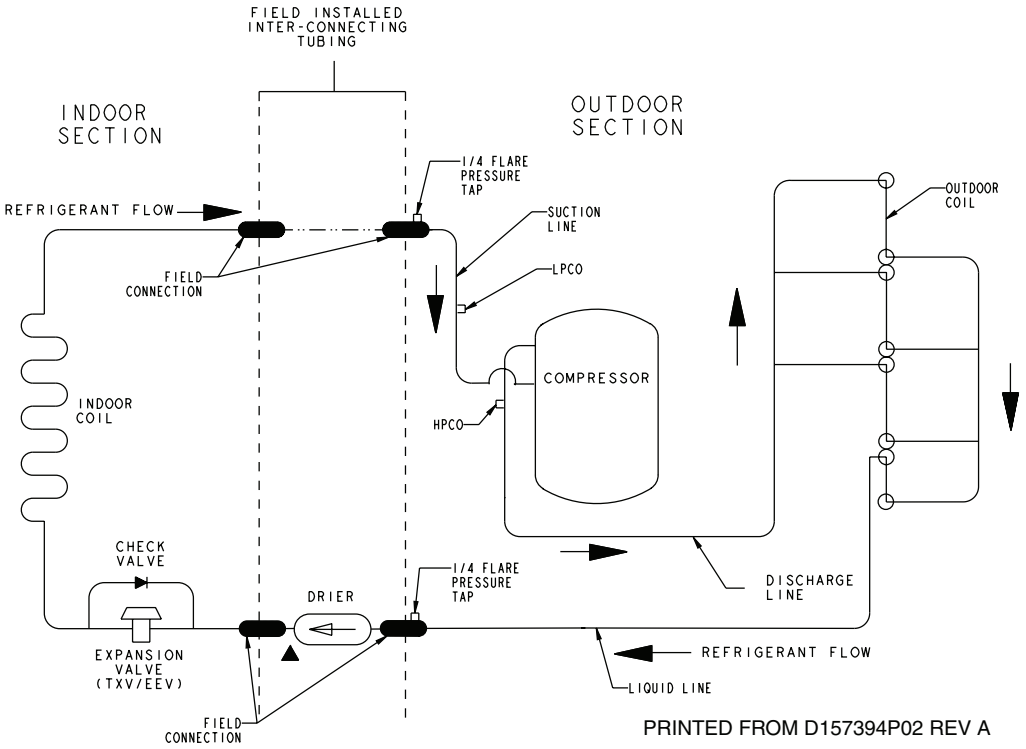

PRINTED FROM D157394P02 REV A

036 Units

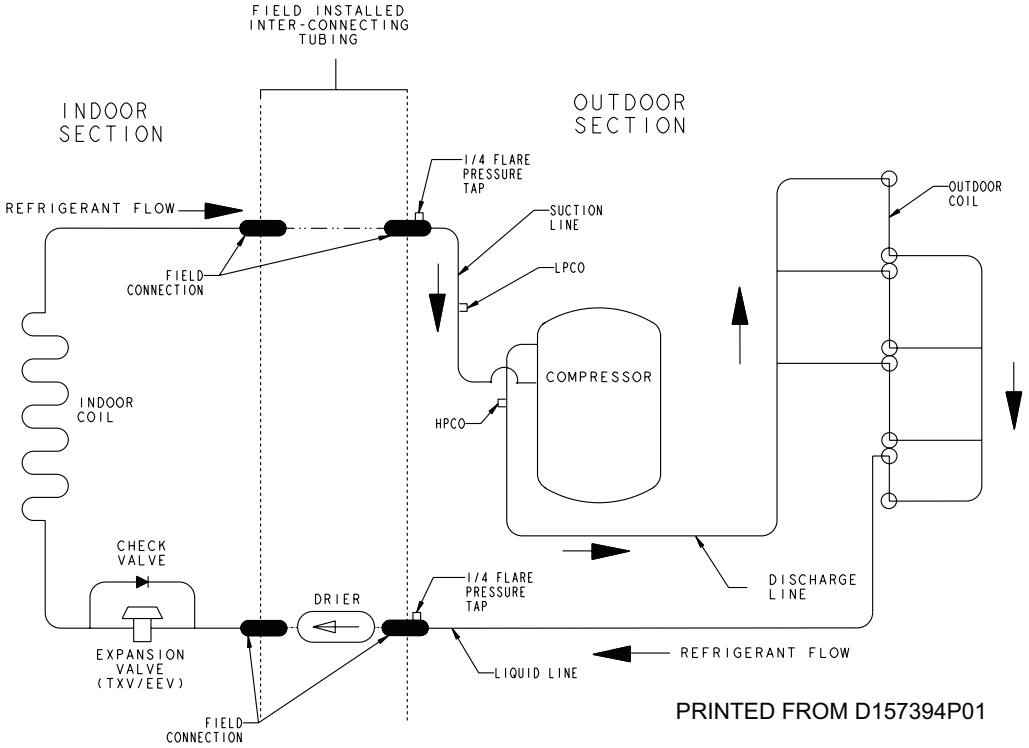

048 Units

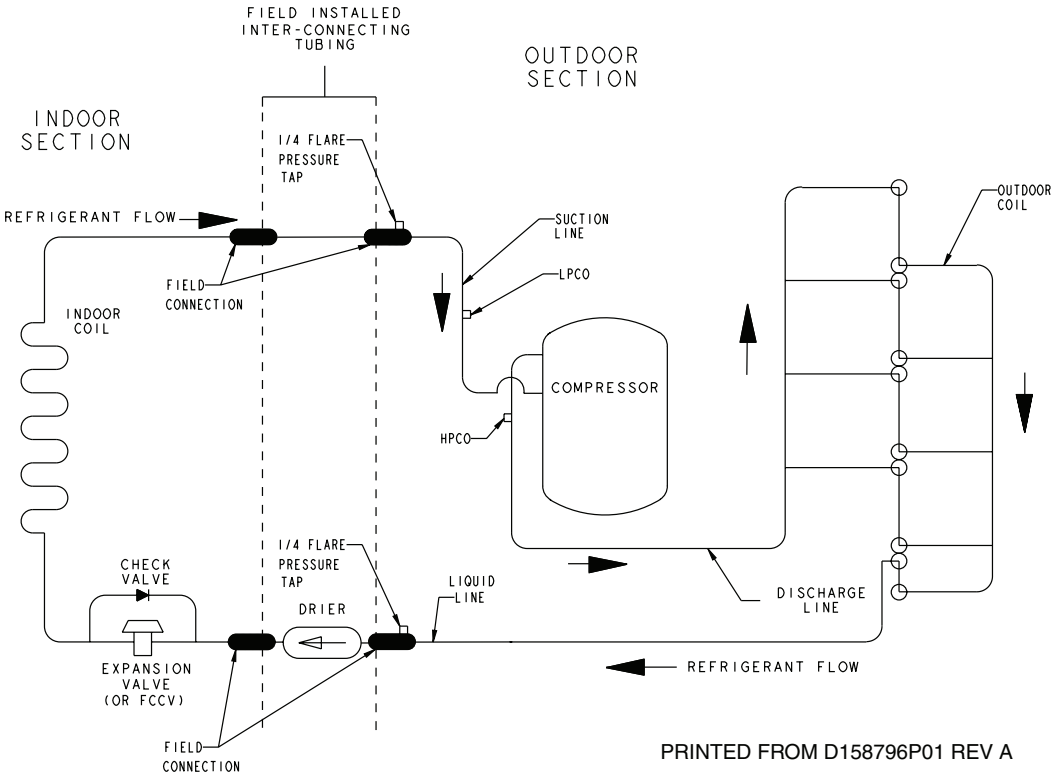

060 Units

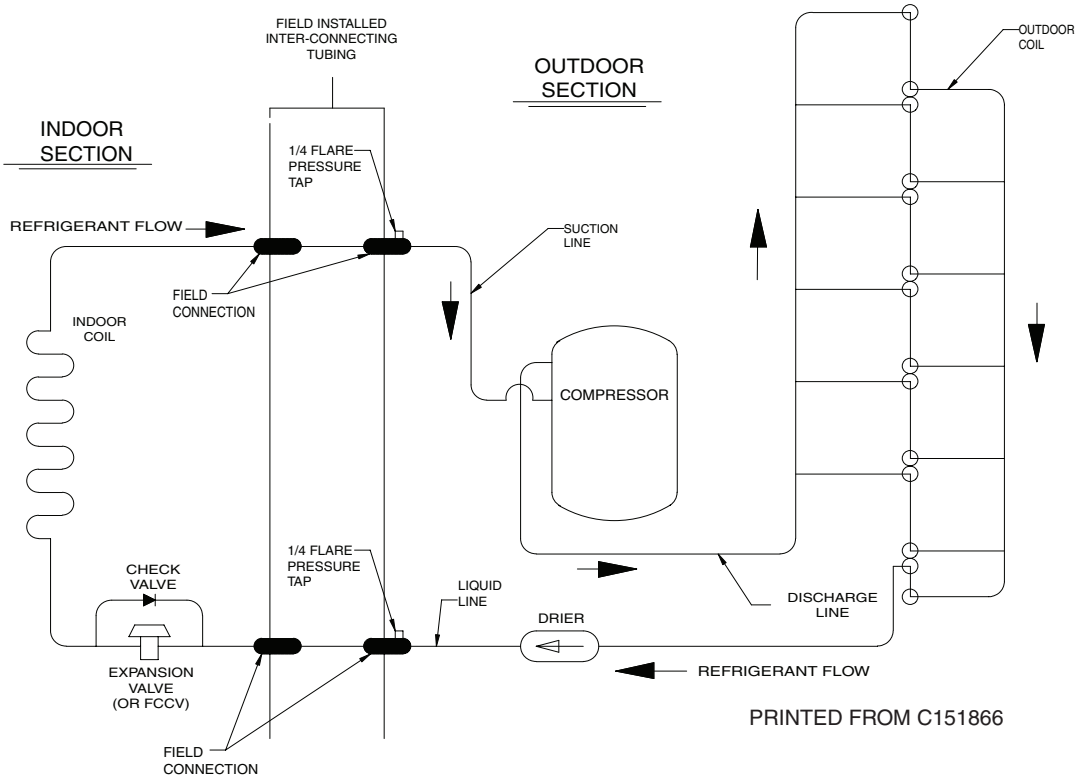

6200 Troup Highway
Tyler, TX 75707
www.trane.com

The manufacturer has a policy of continuous product and product data improvement and it reserves the right to change design and specifications without notice.

Representative-only illustrations included in this document.

© 2015 Trane U.S.,Inc.