CENTERCAL
PROPERTIES, LLC

The Village at Totem Lake - Building A

Kirkland, Washington

60% SUBMITTAL
05/31/2016

ABBREVIATIONS

AB	ANCHOR BOLT
ACM	ALUMINUM COMPOSITE METAL
ACS FLR	ACCESS FLOOR
ACS PNL	ACCESS PANEL
ACT	ACOUSTICAL CEILING TILE
AD	AREA DRAIN
ADA	AMERICANS WITH DISABILITIES ACT
ADH	ADHESIVE
ADJ	ADJUSTABLE
AFF	ABOVE FINISHED FLOOR
AHU	AIR HANDLING UNIT
ALT	ALTERNATE
ALUM	ALUMINUM
APC	ACOUSTICAL PANEL CEILING
APC	ARCHITECTURAL PRECAST CONCRETE
B/	BOTTOM OF
BD	BOARD
BLDG	BUILDING
BM	BENCH MARK
BOT	BOTTOM
BSMT	BASEMENT
CB	CATCH BASIN
CG	CORNER GUARD
CI	CAST IRON
CJ	CONTROL JOINT
CL	CENTERLINE
CLG	CEILING
CLO	CLOSET
CLR	CLEAR
CMU	CONCRETE MASONRY UNIT
CMT	COLOR TO MATCH
CO	CLEAN OUT
COL	COLUMN
CONC	CONCRETE
CONSTR	CONSTRUCTION
CONT	CONTINUOUS
CORR	CORRIDOR
CPT	CARPET
CSK	COUNTERSUNK
CT	CERAMIC TILE
DEMO	DEMOLITION
DEPT	DEPARTMENT
DET	DETAIL
DF	DRINKING FOUNTAIN
DIA	DIAMETER
DIAG	DIAGONAL
DIM	DIMENSION
DL	DEAD LOAD
DMPF	DAMP PROOF(ING)
DN	DOWN
DR	DOOR
DRN	DRAIN
DS	DOWNSPOUT
DWG / DWGS	DRAWING / DRAWINGS
E	EAST
EA	EACH
EC	EXPOSED CONSTRUCTION
EIFS	EXTERIOR INSULATION FINISH SYSTEM
EJ	EXPANSION JOINT
EL	ELEVATION
ELEC	ELECTRIC
ELEV	ELEVATOR
EMER	EMERGENCY
EMER SHR	EMERGENCY SHOWER
ENCL	ENCLOSURE
EQ	EQUAL
EQUIP	EQUIPMENT
ETC	ET CETERA
EWC	ELECTRIC WATER COOLER
EWS	EYE WASH STATION
EXH	EXHAUST
EXIST	EXISTING
EXP	EXPANSION JOINT
EXT	EXTERIOR
FA	FIRE ALARM
FD	FLOOR DRAIN
FDN	FOUNDATION
FE	FIRE EXTINGUISHER
FEC	FIRE EXTINGUISHER CABINET
FH	FIRE HYDRANT
FHC	FIRE HOSE CABINET
FHCE	FIRE HOSE CABINET & EXTINGUISHER
FHR	FIRE HOSE RACK
FIN	FINISH
FIN FLR EL	FINISH FLOOR ELEVATION
FLR	FLOOR
FLUOR	FLUORESCENT
FO	FACE OF
FRG	FIBERGLASS REINFORCED GYPSUM
FT	FOOT OR FEET
FTG	FOOTING
FURN	FURNISH(ED) (FURNITURE)
GA	GAUGE
GALV	GALVANIZED
GL	GLASS
GYP	GYPSUM
H	HIGH
HB	HOSE BIBB
HC	HOLLOW CORE
HCP	HANDICAP(PED)
HDW	HARDWARE
HM	HOLLOW METAL
HORIZ	HORIZONTAL
HPT	HIGH POINT
HR	HOUR
HT	HEIGHT
HVAC	HEATING, VENTILATION, AIR CONDITIONING
ID	INSIDE DIAMETER
IN	INCH
INCL	INCLUDE(D)(ING)
INSUL	INSULATION/INSULATE
INT	INTERIOR
J.C.	JANITOR CLOSET
JT	JOINT
KIT	KITCHEN
KOP	KNOCK OUT PANEL
LAB	LABORATORY
LAV	LAVATORY
LB(S)	POUNDS
LF	LINEAL FEET
LL	LIVE LOAD
LPT	LOW POINT
LT WT	LIGHTWEIGHT
LTG	LIGHTING
MACH	MACHINE
MATL	MATERIAL
MAX	MAXIMUM
MECH	MECHANICAL
MED	MEDIUM
MEMB	MEMBRANE
MEZZ	MEZZANINE
MFR	MANUFACTURER
MH	MANHOLE
MIN	MINIMUM
MISC	MISCELLANEOUS
MLDG	MOLDING
MO	MASONRY OPENING
MTD	MOUNTED
MTL	METAL
MWP	MEMBRANE WATERPROOFING
N	NORTH
NC	NOISE CRITERIA
NIC	NOT IN CONTRACT
NOM	NOMINAL
NTS	NOT TO SCALE
OC	ON CENTER
OD	OUTSIDE DIAMETER
OH	OVERHEAD
OPNG	OPENING
OPP	OPPOSITE
PCC	PRECAST CONCRETE
PCMU	PREFACED CONCRETE MASONRY
UNIT	
PCP	PORTLAND CEMENT PLASTER
PERP	PERPENDICULAR
PL	PLATE
PLAM	PLASTIC LAMINATE
PLAS	PLASTER
PLBG	PLUMB(ING)(ER)
PLYWD	PLYWOOD
PN	PROJECT NORTH
PNL	PANEL
PR	PAIR
PREFAB	PREFABRICATED
PROP	PROPERTY
PSF	POUNDS PER SQUARE FOOT
PSI	POUNDS PER SQUARE INCH
PT	PAINT
PTD	PAINTED
QT	QUARRY TILE
R	RISER/RADIUS
RB	RESILIENT BASE
RCP	REFLECTED CEILING PLAN
RD	ROOF DRAIN
REC/V	RECEIVING
REF	REFERENCE
REF	REFRIGERATOR
REINF	REINFORCED
REQ'D/REQ'D	REQUIRED
REQ/REQS	REQUIREMENT/REQUIREMENTS
REV	REVISION, REVISED
RF	RESILIENT FLOORING
RM	ROOM
RO	ROUGH OPENING
ROW	RIGHT OF WAY
RTU	ROOF TOP UNIT
S	SOUTH
SAB	SOUND ATTENUATION BATT (BLANKET)
SAN	SANITARY
SC	SOLID CORE
SCHED	SCHEDULE
SECT	SECTION
SF	SQUARE FEET
SHT	SHEET
SIM	SIMILAR
SQ	SQUARE
SS	STAINLESS STEEL
STC	SOUND TRANSMISSION CLASS
STD	STANDARD
STL	STEEL
STOR	STORAGE
STRUCT	STRUCTURAL
SUSP	SUSPENDED
SYMM	SYMMETRICAL
T	TREAD
T/	TOP OF
TBD	TO BE DETERMINED
TEL	TELEPHONE
TER	TERRAZZO
TEMP	TEMPORARY
THK	THICK(NESS)
TN	TRUE NORTH
TS	TUBE STEEL
TV	TELEVISION
TYP	TYPICAL
UL	UNDERWRITERS LABORATORIES
UNASSIG	UNASSIGNED
UNO	UNLESS NOTED OTHERWISE
UR	URINAL
VAR	VARIES
VERT	VERTICAL
VEST	VESTIBULE
VIF	VERIFY IN FIELD
W	WEST, WIDTH, WIDE
W/	WITH
WBL	WOOD BLOCKING
WC	WATER CLOSET
WD	WOOD BLOCKING
WH	WATER HEATER
WP	WORK POINT
WWF	WELDED WIRE FABRIC
WWM	WELDED WIRE MESH

MATERIALS LEGEND

(MATERIALS INDICATIONS N.T.S.)

UNEXCAVATED EARTH
EXCAVATED EARTH
GRAVEL
CONCRETE
INSULATION (RIGID)
INSULATION (BATT OR LOOSE)
GYPSUM BOARD
METAL (LARGE SCALE)
METAL (SMALL SCALE)
WOOD FINISHED
WOOD ROUGH / BLOCKING
CEMENT, GROUT, STONE AND SAND
CERAMIC TILE, ACOUSTIC TILE
PLYWOOD
CLAY MASONRY
CONCRETE MASONRY
COMPRESSIBLE FILL
SEALANT & BACKER ROD
CARPET
CARPET PAD
STEEL W/ SPRAY-APPLIED FIREPROOFING

GENERAL NOTES

1. PERFORM ALL WORK IN STRICT ACCORDANCE WITH THE REQUIREMENTS OF ALL GOVERNING CODES AND ORDINANCES, INCLUDING BUT NOT LIMITED TO INTERNATIONAL BUILDING CODE 2012, WASHINGTON STATE CODES, ICC/ANSI 117.1-2003, OSHA REGULATIONS, AND ALL AGENCIES HAVING JURISDICTION.
2. THE GENERAL CONTRACTOR AND ALL SUBCONTRACTORS SHALL VERIFY IN THE FIELD ALL CONDITIONS AFFECTING THEIR WORK. SUBSURFACE CONDITIONS MUST BE INSPECTED PRIOR TO THE START OF WORK. ANY CONDITIONS FOUND THAT ALTER OR OTHERWISE CHANGE THE REQUIREMENTS FOR THE WORK SHALL BE REPORTED IMMEDIATELY TO THE ARCHITECT. ALL CONTRACTORS SHALL CHECK AND VERIFY ALL DIMENSIONS, ELEVATIONS AND CONDITIONS AT THE SITE PRIOR TO COMMENCEMENT OF WORK AND NOTIFY THE ARCHITECT IN WRITING OF ANY DISCREPANCIES IN PLANS AND SPECIFICATIONS BEFORE PROCEEDING.
3. ALL WORK OF THE PROJECT SHALL BE PERFORMED CAREFULLY AND SKILLFULLY BY WORKERS ADEPT IN THEIR TRADES.
4. CARE SHALL BE TAKEN TO AVOID DISTURBANCE OF ADJACENT FUNCTIONS/BUILDINGS. ALL WORK, DELIVERIES AND OTHER CONSTRUCTION RELATED ACTIVITIES SHALL ADHERE IN STRICT ACCORDANCE TO THE CITY OF KIRKLAND RESTRICTIONS AND CONDITIONS. GENERAL CONTRACTOR IS TO HAVE A COPY OF SAID REQUIREMENTS AND CONDITIONS AVAILABLE AT THE JOB SITE AT ALL TIMES FOR REVIEW. SCHEDULING OF ALL WORK, DELIVERIES, AND SHUTDOWNS SHALL BE COORDINATED WITH THE OWNER AND OWNERS OF ADJACENT PROPERTIES.
5. THE GENERAL CONTRACTOR IS RESPONSIBLE FOR THE THOROUGH COORDINATION OF ALL TRADES. NO CLAIMS FOR ADDITIONAL WORK WILL BE ACCEPTED FOR WORK RELATED TO SUCH COORDINATION.
6. ALL CONTRACTORS SHALL EXAMINE THE BID DOCUMENTS AND SHALL BE INFORMED OF THE ENTIRE CONTENTS THEREOF PRIOR TO SUBMISSION OF ANY PROPOSAL. ALL CONTRACTORS SHALL EXAMINE THE CONTRACT DOCUMENTS AND SHALL BE INFORMED OF THE ENTIRE CONTENTS THEREOF PRIOR TO THE COMMENCEMENT OF ANY WORK. ANY ERRORS OR AMBIGUITIES NOTED DURING SAID EXAMINATION SHALL BE IMMEDIATELY BROUGHT TO THE ATTENTION OF THE ARCHITECT, PRIOR TO THE SUBMISSION OF A BID. THE ARCHITECT WILL ISSUE AN ADDENDUM OR INTERPRETATION OF THE CITED ERROR OR AMBIGUITY. NO SUBSEQUENT CLAIM FOR EXTRA WORK WILL BE ALLOWED ON ACCOUNT OF CLAIMED MISUNDERSTANDING OF THE MEANING OR INTENT OF THE CONTRACT DOCUMENTS OR ANY PORTION THEREOF IF THE ITEM OCCASIONING THE CLAIM APPEARED IN, OR WAS INFERABLE FROM, SAID CONTRACT DOCUMENTS AS FURNISHED FOR BIDDING OR CONSTRUCTION.
7. ALL WOOD BLOCKING AND FINISHES SHALL COMPLY WITH THE FIRE RESISTIVE REQUIREMENTS OF THE INTERNATIONAL BUILDING CODE
8. FIRE STOPS, DRAFT STOPS AND ALL FIRE SAFING IS TO BE PROVIDED AS REQUIRED BY THE CODE: (SEE SPECIFICATION CHAPTER 7). FIRE-RESISTANCE-RATED PARTITIONS, FIRE BARRIERS, AND FIRE WALLS SEPARATING VACANT TENANT SPACES FROM THE REMAINDER OF THE BUILDING SHALL BE MAINTAINED. OPENINGS, JOINTS, AND PENETRATIONS IN FIRE-RESISTANCE-RATED ASSEMBLIES SHALL BE PROTECTED IN ACCORDANCE WITH CHAPTER 7 OF THE INTERNATIONAL BUILDING CODE.
9. PERSONS, IN CHARGE OR CONTROL OF, A BUILDING OR PORTION THEREOF, SHALL REMOVE THEREFROM ALL ACCUMULATIONS OF COMBUSTIBLE MATERIALS, FLAMMABLE OR COMBUSTIBLE WASTE OR RUBBISH AND SHALL SECURELY LOCK OR OTHERWISE SECRURE DOORS, WINDOWS AND OTHER OPENINGS TO PREVENT ENTRY BY UNAUTHERIZED PERSONS. THE PREMISE SHALL BE MAINTAINED CLEAR OF WASTE AND HAZARDOUS MATERIALS.
10. ALL DIMENSIONS, NOTES AND DETAILS SHOWING A PORTION OF A DRAWING SHALL APPLY TYPICALLY TO ALL OPPOSITE HAND AND/OR SIMILAR CONDITIONS. DO NOT SCALE DRAWINGS & VERIFY ALL LISTED DIMENSIONS IN FIELD AS REQUIRED FOR THE SCOPE OF THE WORK.
11. DRAWINGS OF EXISTING CONSTRUCTION ARE INTENDED TO BE AN AID TO RECONSTRUCTION AND CANNOT BE ASSUMED TO BE ACCURATE IN DETAIL OR DIMENSION. CONTRACTOR SHALL CHECK AND VERIFY ALL DIMENSIONS, ELEVATIONS, AND CONDITIONS AT THE SITE PRIOR TO COMMENCEMENT OF WORK AND NOTIFY THE ARCHITECT IN WRITING OF ANY DISCREPANCIES IN PLANS AND SPECIFICATIONS BEFORE PROCEEDING.
12. ALL WORK INCLUDED IN THE CONSTRUCTION DOCUMENTS IS THE RESPONSIBILITY OF THE GENERAL CONTRACTOR UNLESS NOTED OTHERWISE. ALL SYSTEMS SHALL BE OPERATIONAL AND IN GOOD WORKING ORDER.
13. PER THE INTERNATIONAL BUILDING CODE, FIRE-RETARDANT TREATED WOOD IS PERMITTED WITHIN ASSEMBLIES OF TWO-HOUR MAXIMUM RATING (SEE CODE MATRIX).
14. ALL STEEL LINTELS OVER MASONRY WALL OPENINGS 5'-0" WIDE OR WIDER SHALL BE FIRE-PROOFED WITH INTUMESCENT PAINT OR OTHER APPROVED FIRE-PROOFING METHOD. BOTTOM FLANGE OF THE LINTEL NEED NOT BE FIRE-PROOFED. ARCHITECT TO APPROVE FIRE-PROOFING METHOD IF OTHER THAN INTUMESCENT PAINT.
15. ALL ELECTRIC RISERS AND SHAFTS SERVING ELEVATORS, EMERGENCY AND EXIT LIGHTS, VOICE COMMUNICATION SYSTEMS, AND SMOKE CONTROL SYSTEMS/EQUIPMENT ARE TO BE ENCLOSED WITH TWO HOUR FIRE-RESISTIVE RATED CONSTRUCTION AND ARE TO INCLUDE CONTINUOUS THREE INCH (3") HIGH WATER STOPS ON ALL SIDES AS APPROPRIATE. INSTALL SLEEVES AS REQ'D.
16. REFER TO SPECIFICATIONS FOR ADDITIONAL INFORMATION. REFER TO STRUCTURAL, MECHANICAL, PLUMBING, AND ELECTRICAL DRAWINGS FOR ADDITIONAL GENERAL NOTES, CODE REQUIREMENTS, AND INFORMATION.
17. PROVIDE MIN. 4" HIGH REINFORCED CONCRETE HOUSEKEEPING PADS (OR SIZED PER CODE REQUIREMENTS AND/OR EQUIPMENT MANUFACTURER'S RECOMMENDATION) FOR ALL FLOOR MOUNTED EQUIPMENT.
18. PROVIDE FIRE-RETARDANT TREATED PLYWOOD BACKER BOARDS AROUND THE INSIDES OF ALL ELECTRICAL, TELEPHONE, AND IT (SECURITY, NETPOP, ETC.) ROOMS THROUGHOUT BUILDING AS REQUIRED FOR INSTALLATION OF EQUIPMENT.
19. ALL ACCESSIBLE ROUTES/DRIVE AISLES AND HANDICAPPED PARKING SPACES SHALL HAVE A MINIMUM CLEAR HEIGHT OF 86" ABOVE FINISH FLOOR, TO UNDERSIDE OF ALL BUILDING COMPONENTS.
20. FLAME SPREAD LIMITATIONS FOR INTERIOR FINISHES USED IN THE RESIDENTIAL PUBLIC CORRIDORS AND EXIT STARIS SHALL BE:
    - 1.1. FINISHED MATERIALS FOR PUBLIC CORRIDORS: MIN. CLASS I I FLAME SPREAD
    - 1.2. FINISHED MATERIALS FOR EXIT STAIRS: MIN. CLASS I FLAME SPREAD
21. SWITCHES AND OUTLETS TO BE WHITE WITH WHITE COVERPLATE, DECORA STYLE

SYMBOLS LEGEND

DETAIL CALLOUT
DETAIL NUMBER
SHEET WHERE DRAWN

REVISION CLOUD

DETAIL CALLOUT
DETAIL NUMBER
SHEET WHERE DRAWN

ROOM TAG
ROOM NAME
ROOM NUMBER
ROOM AREA (IF SHOWN)

GRID
GRID NAME/NUMBER

WINDOW TAG
WINDOW NUMBER

ELEVATION DATUM MARKER
EL: 0'-0"

DOOR TAG
DOOR NUMBER

NORTH ARROW

EQUIPMENT / FURNITURE TAG
NUMBER

SECTION CALLOUT
DETAIL NUMBER
SHEET WHERE DRAWN

CASEWORK TAG
MODEL NUMBER
H = HEIGHT
D = DEPTH
W = WIDTH
Q = QUANTITY

EXT. ELEVATION CALLOUT
DETAIL NUMBER
SHEET WHERE DRAWN

MULTI-LEADER

INT. ELEVATION CALLOUT
SHEET WHERE DRAWN
DETAIL NUMBER

WALL TYPE TAG
WALL TYPE
NUMBER ON WALL TAG CORRESPONDS TO DETAIL NUMBER ON SHEET X2.5

TITLE MARK
DETAIL NUMBER
VIEW NAME
1/8" = 1' - 0"
DRAWING SCALE

SIGNAGE TAG
NUMBER

MATCH LINE

PROJECT INFORMATION

ADDRESS:	KIRKLAND, WASHINGTON 98034
AREA SUMMARY:	40,235 SF
ZONING:	COMMERCIAL TL-2
OCCUPANCY	M - MERCANTILE
CONSTRUCTION:	TYPE III-B
FIRE PROTECTION:	SPRINKLERED THROUGHOUT

VICINITY MAP

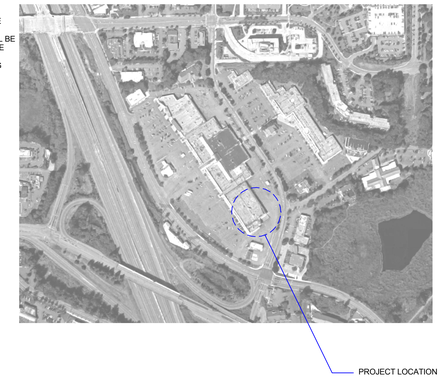

Sheet List

Sheet Number	Sheet Name
0. GENERAL	
G0001	COVER PAGE
G1001	GENERAL NOTES, ABBREVIATIONS, LEGENDS & DRAWING INDEX
G1101	MOUNTING HEIGHTS, DIAGRAMS & NOTES
G1201	EGRESS & FIRE SEPARATION DIAGRAMS
3. ARCHITECTURAL	
A1000	OVERALL SITE PLAN
A1001	SITE PLAN
A2101	FIRST FLOOR PLAN
A2102	MEZANINE PLAN
A2201	SLAB EDGE PLAN
A2701	REFLECTED CEILING PLAN
A2801	ROOF PLAN
A2802	ROOF EDGE PLAN
A2810	LOW SOUTH CANOPY PLANS
A2811	HIGH SOUTH CANOPY PLAN
A2812	HIGH SOUTH CANOPY PLANS
A2813	HIGH WEST CANOPY PLANS
A3001	OVERALL EXTERIOR ELEVATIONS
A3010	ENLARGED SOUTH ELEVATION, PARTIAL PLAN & WALL SECTIONS
A3011	ENLARGED SOUTH ELEVATION, PARTIAL PLAN & WALL SECTIONS
A3012	ENLARGED SOUTH ELEVATION, PARTIAL PLAN & WALL SECTIONS
A3013	ENLARGED SOUTH ELEVATION, PARTIAL PLAN & WALL SECTIONS
A3014	ENLARGED SOUTH ELEVATION, PARTIAL PLAN & WALL SECTIONS
A3020	ENLARGED EAST ELEVATION, PARTIAL PLAN & WALL SECTIONS
A3021	ENLARGED EAST ELEVATION, PARTIAL PLAN & WALL SECTIONS
A3030	ENLARGED NORTH ELEVATION, PARTIAL PLAN & WALL SECTION
A3100	3D VIEWS
A4001	BUILDING SECTIONS
A5001	ENLARGED FLOOR PLANS
A5002	ENLARGED FLOOR PLANS
A5201	STAIR PLANS & SECTIONS - NORTH
A5202	STAIR PLANS & SECTIONS - SOUTH
A5203	EXTERIOR RAMP DETAILS
A5204	ELEVATOR PLAN AND SECTIONS - DO NOT PRINT
A5205	ELEVATOR SECTION
A8101	PLAN DETAILS
A8201	WALL DETAILS
A8202	WALL DETAILS
A8211	STAIR DETAILS
A8221	ELEVATOR DETAILS
A8401	ROOF DETAILS
A8411	CANOPY DETAILS
A8501	EXPANSION JOINT DETAILS
A8601	OPENING DETAILS
A9101	DOOR SCHEDULE
A9201	WINDOW SCHEDULES
A9202	WINDOW SCHEDULES
4.0 Structure	
S0001	GENERAL NOTES
S0002	GENERAL NOTES
S0003	GENERAL NOTES
S0004	LOADING DIAGRAM
S1001	TYPICAL DETAILS
S1002	TYPICAL DETAILS
S1003	TYPICAL DETAILS
S1004	TYPICAL DETAILS
S1005	TYPICAL DETAILS
S1006	TYPICAL DETAILS
S1007	TYPICAL DETAILS
S1008	TYPICAL DETAILS
S2101	FOUNDATION PLAN
S2101A	SUPPLEMENTAL COLUMN PLAN
S2201	MEZZANINE FRAMING PLAN
S2301	MAIN ROOF FRAMING PLAN
S2401	UPPER ROOF / SCREEN WALL FRAMING PLAN
S2501	CANOPY FRAMING PLANS
S3001	STEEL COLUMN SCHEDULE
S3002	BRACED FRAME ELEVATIONS
S4001	FOUNDATION SECTIONS AND DETAILS
S4002	GRADE BEAM SECTIONS AND ELEVATIONS
S4003	FOUNDATION SECTIONS AND DETAILS
S4004	FOUNDATION SECTIONS AND DETAILS
S5001	STEEL FRAMING DETAILS
S5002	STEEL FRAMING DETAILS
S5011	STEEL ROOF FRAMING DETAILS
S5101	SCREEN WALL ELEVATIONS AND DETAILS
S5102	SUNSHADE GIRT ELEVATIONS AND DETAILS
5. MECHANICAL	
M0001A	MECHANICAL COVER SHEET
M0002A	EQUIPMENT SCHEDULES
M1001A	SITE PLAN - MECHANICAL
M2101A	FIRST FLOOR PLAN - MECH
M2102A	MEZZANINE PLAN - MECH
M2801A	ROOF PLAN - MECHANICAL
8. PLUMBING	
P0001A	PLUMBING COVER SHEET
P0002A	DIAGRAMS & CALCULATIONS
P1001A	BELOW GRADE PLAN - PLUMB
P2101A	FIRST FLOOR PLAN - PLUMB
P2102A	MEZZANINE PLAN - PLUMB
P2801A	ROOF PLAN - PLUMBING

CLIENT

CENTERCAL PROPERTIES, LLC

COPYRIGHT:

Any reproduction or distribution for any purpose other than authorized by IBI Group is forbidden. Written dimensions shall have precedence over scaled dimensions. Contractors shall verify and be responsible for all dimensions and conditions on the job, and report any errors, omissions or conflicts before then the dimensions and conditions shown on the drawing. Shop drawings shall be submitted to IBI Group for approval before proceeding with fabrication.

COPYRIGHT © 2016 IBI GROUP

ISSUES

NO.	ISSUANCE	STATUS	DATE
1	60% CD SET		5/31/2016

SEAL

10759 REGISTERED ARCHITECT
CRAIG ROTHENBURGER
STATE OF WASHINGTON

SUB CONSULTANT

PRIME CONSULTANT

IBI Group
18401 VON KARMAN AVE, SUITE 110
tel 949.833.5588 fax 949.833.5511
ibigroup.com

PROJECT

The Village at Totem Lake - Building A
Kirkland, Washington

PROJECT NO:	Building A
DRAWN BY:	Author
CHKD' BY:	Checker
SCALE:	As indicated
DATE:	5/31/2016

SHEET TITLE

GENERAL NOTES, ABBREVIATIONS, LEGENDS & DRAWING INDEX

BLDG	SHEET NUMBER	ISSUE
A	G1001	

C:\Users\ethan.walker\Documents\ATV_Totem_Bldg\A_2016_ethan.walker.rvt

5/31/2016 5:58:58 PM

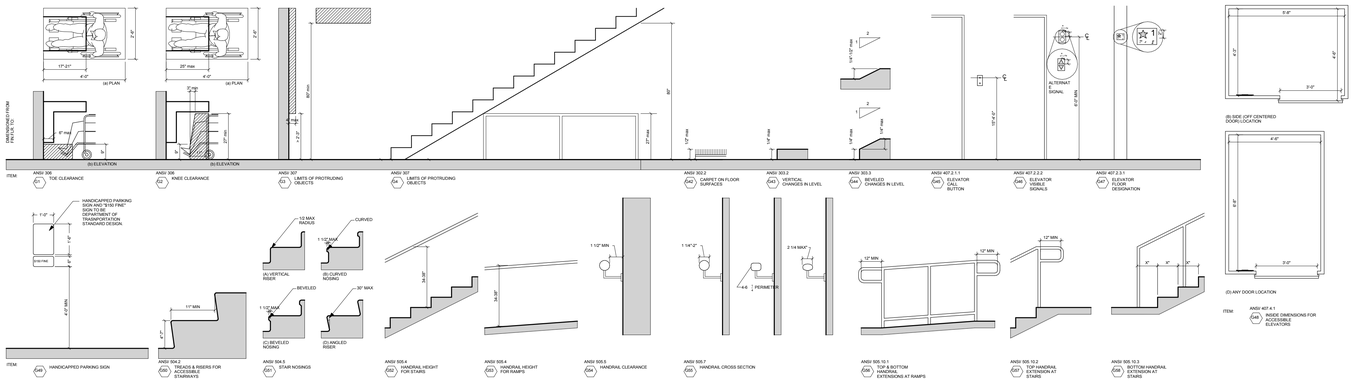

MANEUVERING CLEARANCE AT MANUAL SWINGING DOORS

(IF PER PLAN SIZE)

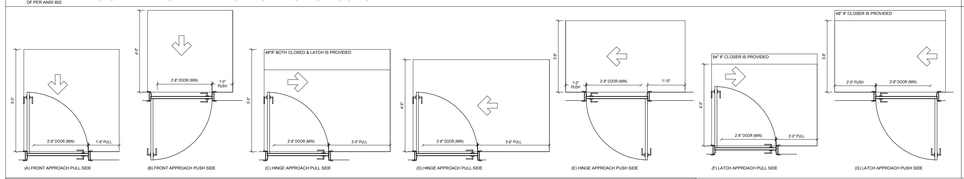

MANEUVERING CLEARANCE AT SLIDING DOORS

(IF PER PLAN SIZE)

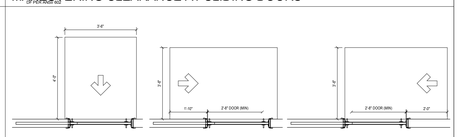

MANEUVERING CLEARANCE AT RECESSED DOORS

(IF PER PLAN SIZE)

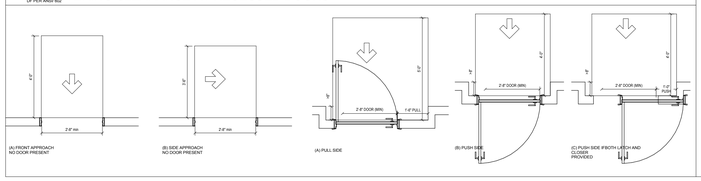

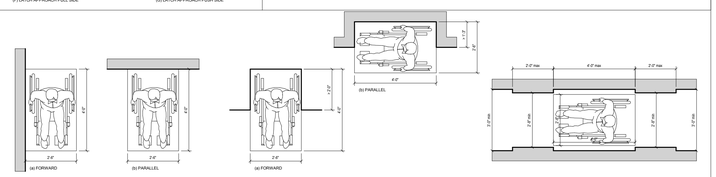

ACCESSIBILITY GENERAL NOTES

1. THIS PROJECT SHALL COMPLY FULLY WITH ALL REQUIREMENTS OF THE 2012 INTERNATIONAL BUILDING CODE CHAPTER 11 AND ANSI A 117.1-2009 AS APPLICABLE
2. ALL DOORS LEADING TO REQUIRED ACCESSIBLE SPACES SHALL BE MINIMUM 3'-0" WIDE, 18" CLEARANCE ON PULL SIDE, AND HAVE LEVER OPERATED HARDWARE, AND COMPLY FULLY WITH ANSI A117.1-2009 SECTION 404 (DOORS AND DOORWAYS)
3. ALL DOORS LEADING TO HAZARDOUS SPACES SHALL HAVE KNURLED
4. ALL CONTROLS AND OPERATING MECHANISMS SHALL BE WITHIN REACH RANGE (AS DESCRIBED IN ANSI A117.1 SECTION 308) AND COMPLY WITH IBC CHAPTER 11 (CONTROLS, OPERATING MECHANISMS AND HARDWARE) 15"A.F.F TO 48" A.F.F.
5. ALL EMERGENCY WARNING / FIRE ALARM SYSTEMS SHALL BE BOTH AUDIBLE AND VISUAL AND SHALL COMPLY FULLY WITH ANSI 117.1 2009 CH.7.702. ALL VISUAL ALARMS THROUGHOUT THE BUILDING TO BE SYNCHRONIZED.
6. VISUAL ALARMS SHALL BE MOUNTED 80" MIN OR 6" BELOW CEILING WHICHEVER IS LESS. VISUAL ALARMS ONLY ARE ACCEPTABLE IF AN AUDIBLE ALARM LOCATED IN THE CORRIDOR IS CLOSE ENOUGH TO EXCEED SOUND LEVELS WITHIN THE ROOM OR SPACE BY A MINIUM OF 15 DBA.
7. WHERE A REQUIRED EXIT FROM AN OCCUPIABLE LEVEL ABOVE OR BELOW A
8. ALL STAIRS, EXCEPT THOSE IN DWELLING UNITS, IN ENCLOSED STAIR TOWERS, OR SET TO THE SIDE OF THE PATH OF TRAVEL SHALL HAVE A DETECTABLE WARNING AT THE TOP AND AT THE LANDING OF STAIR RUNS. COMPLYING WITH IBC CHAPTER 10 ALL STAIRS SHALL COMPLY WITH IBC CHAPTER 10 .
9. SIGNAGE (NEC) PROVIDED THROUGHOUT THE BUILDING SHALL BE BRAILLE, TACTILE AND COLOR CONTRASTING AND FULLY COMPLY WITH IBC 2012 (SIGNAGE).
10. NOT USED
11. PROVIDE MAXIMUM 1:12 SLOPE AT ALL RAMPS WITH HANDRAILS AT BOTH SIDES. (ANSI A117.1-405)
12. MAIN BUILDING ENTRY SHALL BE ALONG AN ACCESSIBLE ROUTE, AND SHALL COMPLY WITH CHAPTER 11, IBC 2012
13. ACCESSIBLE ENTRANCE: MAIN ENTRY SHALL BE FULLY ACCESSIBLE, EQUIPPED WITH ELECTRIC PUSH BUTTON DOOR OPERATOR DEVICE, AND COMPLY FULLY WITH IBC 1105 (ACCESSIBLE ENTRANCES). RECEPTION DESK TO PROVIDE ACCESSIBLE ACCESS (36" WIDE @ 28" TO 34" A.F.F.)
14. NOT USED
15. NOTE USED
16. GRAB BARS SHALL BE INSTALLED AT 33" TO 36" A.F.F. TO TOP OF GRAB BAR. FLUSH CONTROLS IN ADA STALLS AND BATHROOMS TO BE ON THE WIDE SIDE OF THE TOILET.
17. NOT USED
18. NOT USED
19. CHANGE IN LEVEL OF 1/4 INCH HIGH MAXIMUM SHALL BE PERMITTED TO BE VERTICAL. CHANGES IN LEVEL BETWEEN 1/4 INCH HIGH MAXIMUM AND 1/2 INCH HIGH MAXIMUM SHALL BE BEVELED WITH A SLOPE NOT STEEPER THAN 1:2. CHANGES IN LEVEL GREATER THAN 1/2 INCH SHALL BE RAMPED AND SHALL COMPLY WITH ANSI 117.1.

ACCESSIBILITY REQUIREMENTS

ENTRANCES

1. PROVIDE 32" MIN. CLEAR DOOR OPENING FOR ENTRANCE DOORS
2. SECOND MEANS OF EGRESS AS REQUIRED BY FIRE CODE
3. ALL ENTRANCE DOORS SHALL HAVE LEVEL OPERATED HARDWARE
4. 18" MIN MANEUVERING CLEARANCE ON PULL SIDE OF DOOR
5. THRESHOLD HEIGHT SHALL BE NO GREATER THAN 1/2" FOR SWING DOORS AND NO GREATER THAN 3/4" SLIDING GLASS DOORS
6. DOOR OPENING FORCE SHALL BE NO GREATER THAN 8.5 LBS.

KITCHENS

ACCESSIBLE ROUTE

7. ACCESSIBLE KITCHENS AND THEIR COMPONENTS SHALL BE ON AN ACCESSIBLE ROUTE

CLEAR FLOOR SPACE

8. CLEARANCE BETWEEN COUNTERS SHALL BE 40" MIN
9. CLEARANCE BETWEEN COUNTERS UN U-SHAPED KITCHENS SHALL BE 60" MIN
10. A CLEAR FLOOR SPACE AT LEAST 30"x48" THAT ALLOWS EITHER A FORWARD OR PARALLEL APPROACH SHALL BE PROVIDED AT ALL APPLIANCES

CONTROLS

11. CONTROLS, DISPENSERS, RECEPTACLES AND OTHER OPERABLE EQUIPMENT SHALL COMPLY WITH A FORWARD OR PARALLEL APPROACH
REACH RANGE REQUIREMENTS (FORWARD APPROACH 15"-48" ABOVE FINISHED FLOOR (AFF);PARALLEL APPROACH 9"TO 54" AFF).

1 G1101 MOUNTING HEIGHTS, DIAGRAMS & NOTES

Scale: 1 : 36

CLIENT

CENTERCAL PROPERTIES, LLC

COPYRIGHT:

Any reproduction or distribution for any purpose other than authorized by IBI Group is forbidden. Written dimensions shall have precedence over scaled dimensions. Contractors shall verify and be responsible for all dimensions and conditions on the job, and report any errors or omissions to the Consultant on the dimensions and conditions shown on the drawing. Shop drawings shall be submitted to IBI Group for approval before proceeding with fabrication.

COPYRIGHT © 2016 IBI GROUP

ISSUES

NO.	ISSUANCE	STATUS	DATE
1	60% CD SET		5/31/2016

SEAL

10759 REGISTERED ARCHITECT
CRAIG ROTHENBURGER
STATE OF WASHINGTON

SUB CONSULTANT

PRIME CONSULTANT

IBI Group
19401 VON KARMAN AVE, SUITE 110
tel 949.833.5588 fax 949.833.5511
ibigroup.com

PROJECT

The Village at Totem Lake - Building A
Kirkland, Washington

PROJECT NO:	Building A
DRAWN BY:	Author
CHKD' BY:	Checker
SCALE:	1 : 36
DATE:	5/31/2016

SHEET TITLE

MOUNTING HEIGHTS, DIAGRAMS & NOTES

BLDG	SHEET NUMBER	ISSUE
A	G1101	

5/31/2016 5:58:57 PM C:\Users\ethan.walker\Documents\ATV_Totem_Bldg'A_A_2016_ethan.walker.rvt

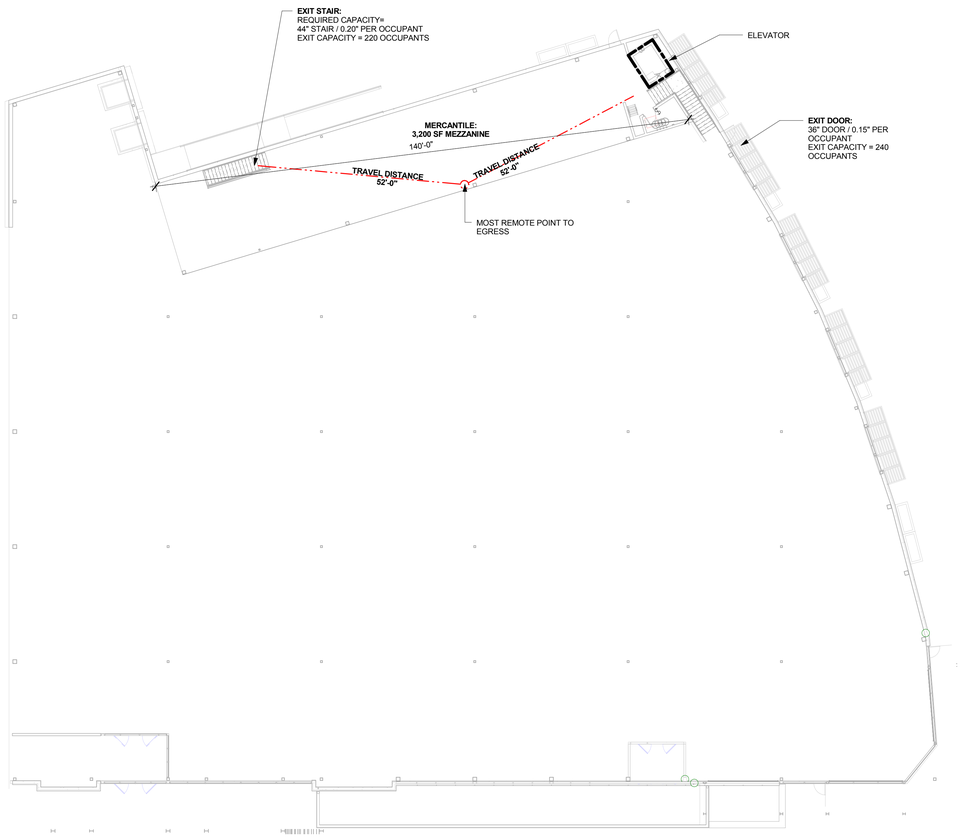

2 G1201 EGRESS AND FIRE SEPARATION PLAN MEZZANINE LEVEL

Scale: 1/16" = 1'-0"

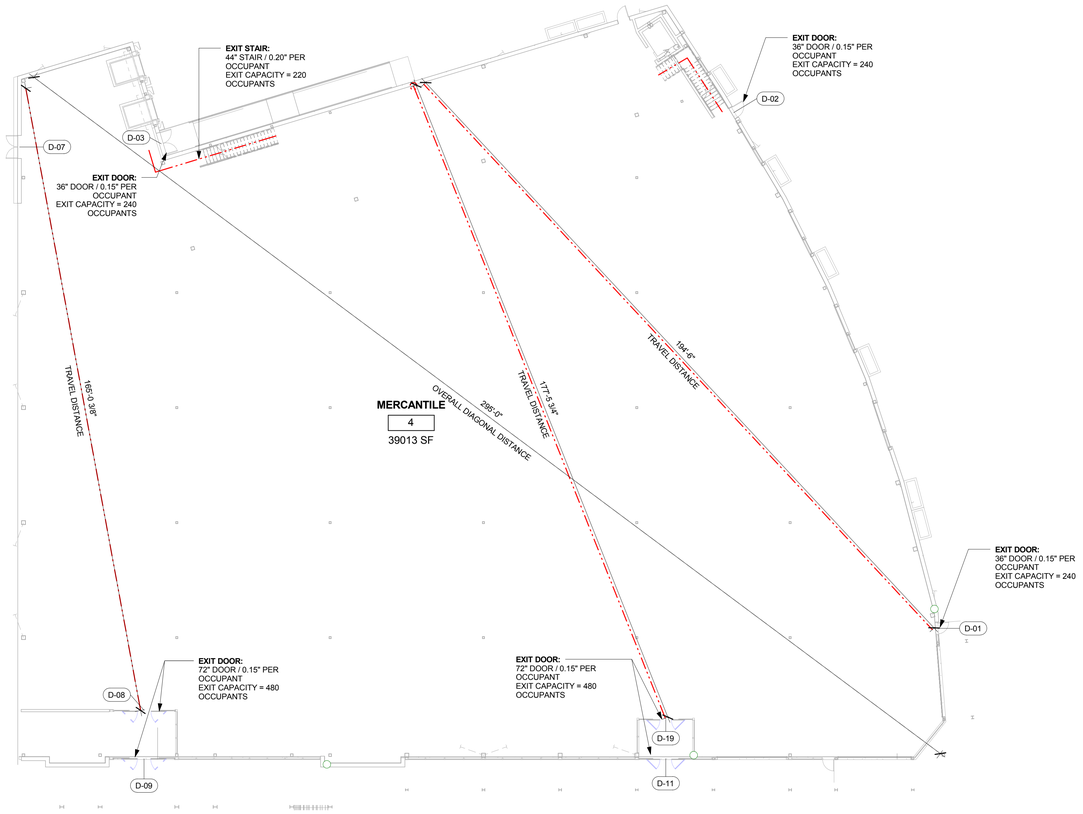

1 G1201 EGRESS AND FIRE SEPARATION FIRST FLOOR PLAN

Scale: 1/16" = 1'-0"

Means of Egress Calculation						
Name	Square Footage	Load Factor	No. Occupants	Egress Capacity Factor	Exit Width (IN)	No. of Exits
BLDG A - LEVEL 1						
BUILDING A - First Floor	39482 SF	30	1317	0.15	198	4
BLDG A - MEZZANINE						
BUILDING A - Mezzanine	3574 SF	30	120	0.15	18	2

EXIT DOOR CAPACITY		
Mark	Width	Actual Capacity

RATED DOOR LEGEND

UL LABEL	RATING	MAX GLASS AREA
A	180 MIN	100 SQ IN PER LEAF
B	90 MIN	100 SQ IN PER LEAF
C	45 MIN	1296 SQ IN PER LITE
S	SMOKE	

FIRE SEPARATION LEGEND

ONE HOUR SEPARATION

EGRESS TRAVEL PATH

EXIT SUMMARY

MEZZANINE
60 GROSS SF PER PERSON ADDITIONAL FLOORS
3,200 SF / 60 SF PER PERSON =
54 ALLOWABLE OCCUPANTS

*1,440 PERSONS PER EXITING PROVIDED

1,396 PERSONS TOTAL ALLOWABLE OCCUPANTS

PROJECT IS IN COMPLIANCE WITH NFPA 13 AUTOMATIC SPRINKLER SYSTEM.

MERCANTILE:
GRADE FLOOR
30 GROSS SF PER PERSON FIRST FLOOR
39049 SF / 30 SF PER PERSON =
1302 ALLOWABLE OCCUPANTS

BUILDING CODE EXIT REQUIREMENTS

1. MAXIMUM TRAVEL DISTANCES (PER TABLE 1016.1):
   - A, M, R.....250 FT (W/ SPRINKLERS)
   - B.....300 FT (W/ SPRINKLERS)
   - S-2.....400 FT (W/ SPRINKLERS)
2. DEAD END CORRIDORS (PER SECTION 1018.4): 20 FT (EXCEPT 50 FT FOR OCCUPANCIES B, M, R, AND S W/ SPRINKLERS)
3. MINIMUM EXIT DOOR WIDTH: 36"
   MINIMUM EXIT STAIR WIDTH: 44"
4. DOOR WIDTH INDICATES WIDTH OF DOOR LEAF.
   STAIR WIDTH INDICATES WIDTH OF TREADS.
5. SINGLE MEANS OF EGRESS FROM DWELLING UNIT PERMITTED PER TABLE 1015.1 (100 OCCUP. MAX.)
6. THE CAPACITY OF EXITS CALCULATED AS FOLLOWS (PER SECTION 1005.1):
   - STAIRS AND OTHER VERTICAL EXITS: 0.20" PER PERSON
   - DOORS AND HORIZONTAL EXITS: 0.15" PER PERSON
7. OCCUPANCY CALCULATED AS FOLLOWS (PER TABLE 1004.1.1):
   MERCANTILE
   AREAS ON OTHER FLOORS.....60SF PER PERSON
   BASEMENT AND GRADE FLOOR.....30SF PER PERSON
   MECHANICAL ROOMS.....300 SF PER PERSON
   LOADING / STORAGE.....300 SF PER PERSON
   EXERCISE ROOMS.....50 SF PER PERSON

   UNCONCENTRATED ASSEMBLY.....15 SF PER PERSON
8. SWING OF EXIT DOORS IN THE DIRECTION OF EGRESS.
9. EGRESS HEADROOM: 7'-6" MIN.
   STAIRS AND DOORS HEADROOM: 7'-0" MIN.

CLIENT

CENTERCAL PROPERTIES, LLC

COPYRIGHT:

Any reproduction or distribution for any purpose other than authorized by IBI Group is forbidden. Written dimensions shall have precedence over scaled dimensions. Contractors shall verify and be responsible for all dimensions and conditions on the job, and IBI Group must be informed of any variation from the dimensions and conditions shown on the drawing. Shop drawings shall be submitted to IBI Group for approval before proceeding with fabrication.

COPYRIGHT © 2016 IBI GROUP

ISSUES

NO.	ISSUANCE	STATUS	DATE
1	60% CD SET		5/31/2016

SEAL

10759 REGISTERED ARCHITECT

CRAIG ROTHENBURGER
STATE OF WASHINGTON

SUB CONSULTANT

PRIME CONSULTANT

IBI

IBI Group
18401 VON KARMAN AVE, SUITE 110
tel 949.833.5588 fax 949.833.5511
ibigroup.com

PROJECT

The Village at Totem Lake - Building A
Kirkland, Washington

PROJECT NO:	Building A
DRAWN BY:	Author
CHKD' BY:	Checker
SCALE:	As indicated
DATE:	5/31/2016

SHEET TITLE

EGRESS & FIRE SEPARATION DIAGRAMS

BLDG	SHEET NUMBER	ISSUE
A	G1201	

C:\Users\nathan.walker\Documents\ATW_Totem_Bldg_A_2016_nthan.walker.rvt

5/31/2016 5:08:58 PM

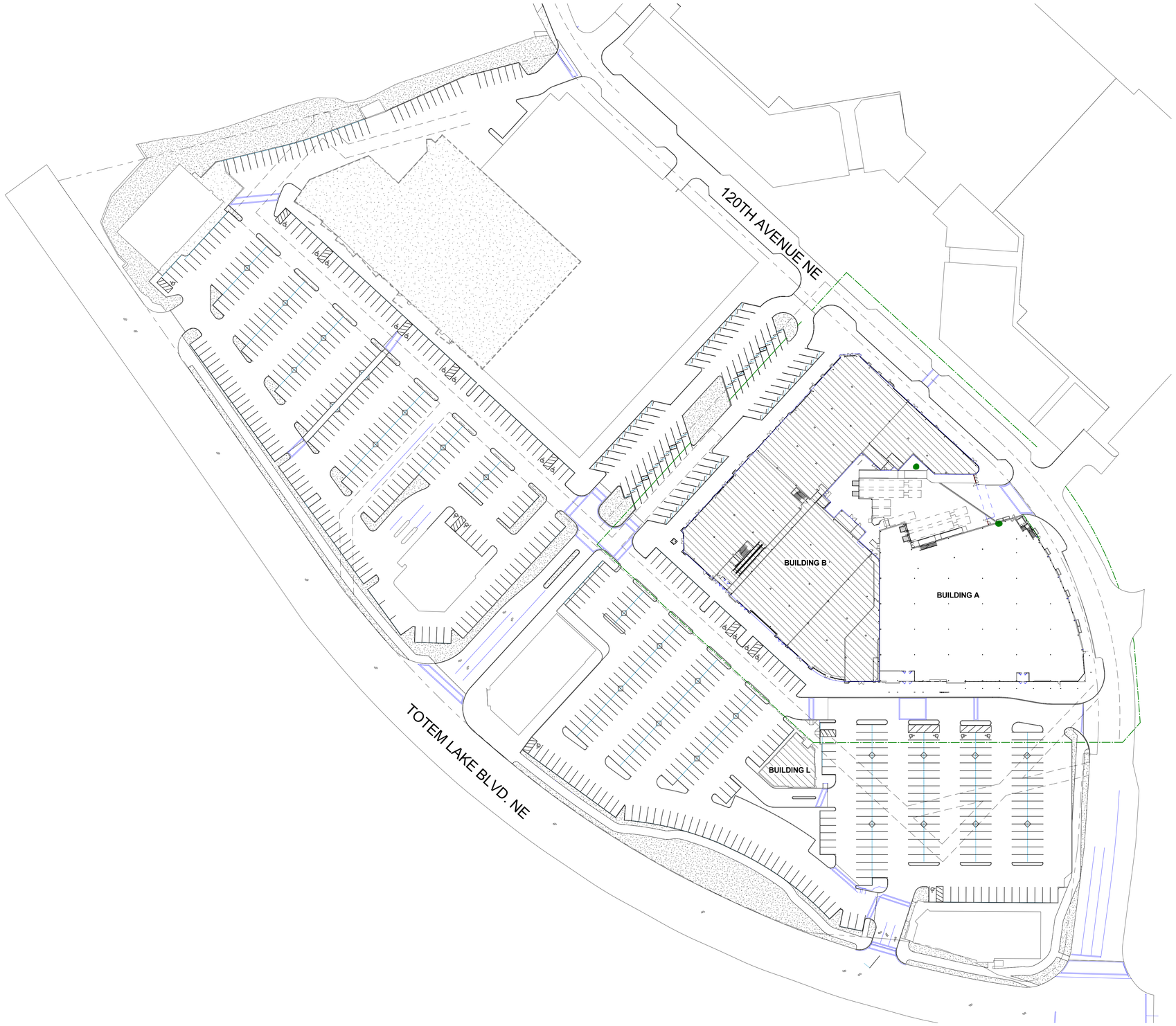

1 A1000 OVERALL SITE PLAN
Scale: 1" = 50'-0"

N PROJECT
N TRUE

CLIENT

CENTERCAL PROPERTIES, LLC

COPYRIGHT:

Any reproduction or distribution for any purpose other than authorized by IBI Group is forbidden. Written dimensions shall have precedence over scaled dimensions. Contractors shall verify and be responsible for all dimensions and conditions on the job and IBI Group shall be informed of any variations from the dimensions and conditions shown on the drawing. Shop drawings shall be submitted to IBI Group for approval before proceeding with fabrication.

COPYRIGHT © 2016 IBI GROUP

ISSUES

NO.	ISSUANCE	STATUS	DATE
1	60% CD SET		5/31/2016

SEAL

10759 REGISTERED ARCHITECT
CRAIG ROTHENBURGER
STATE OF WASHINGTON

SUB CONSULTANT

PRIME CONSULTANT

IBI Group
18401 VON KARMAN AVE, SUITE 110
tel 949.833.5588 fax 949.833.5511
ibigroup.com

PROJECT
The Village at Totem Lake - Building A
Kirkland, Washington

PROJECT NO:	Building A
DRAWN BY:	Author
CHKD' BY:	Checker
SCALE:	1" = 50'-0"
DATE:	5/31/2016

SHEET TITLE
OVERALL SITE PLAN

BLDG	SHEET NUMBER	ISSUE
A	A1000	

C:\Users\ethan.walker\Documents\ATW_Totem_Bldg A_2016_ethan.walker.rvt

5/31/2016 5:58:08 PM

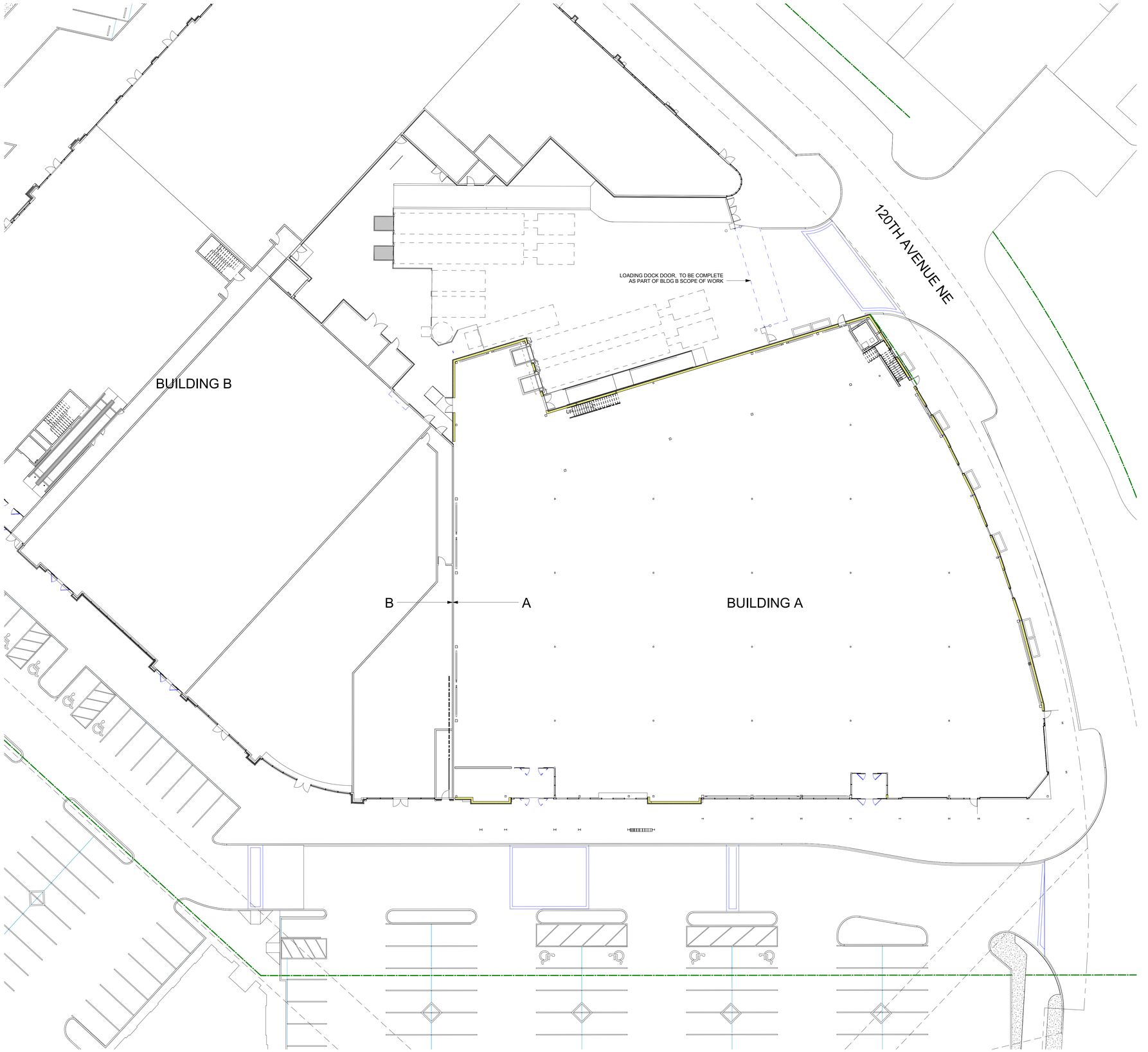

1 SITE PLAN
A1001 Scale: 1/16" = 1'-0"

C:\Users\ethan.walker\Documents\ATW_Totem_Bldg A_2016_ethan.walker.rvt

5/31/2016 5:58:10 PM

CLIENT

CENTERCAL PROPERTIES, LLC

COPYRIGHT:

Any reproduction or distribution for any purpose other than authorized by IBI Group is forbidden. Written dimensions shall have precedence over scaled dimensions. Contractors shall verify and be responsible for all dimensions and conditions on the job and IBI Group shall be informed of any variations from the dimensions and conditions shown on the drawing. Shop drawings shall be submitted to IBI Group for approval before proceeding with fabrication.

COPYRIGHT © 2016 IBI GROUP

ISSUES

NO.	ISSUANCE	STATUS	DATE
1	60% CD SET		5/31/2016

SEAL

10759 REGISTERED ARCHITECT

CRAIG ROTHENBURGER
STATE OF WASHINGTON

SUB CONSULTANT

PRIME CONSULTANT

IBI Group
18401 VON KARMAN AVE, SUITE 110
tel 949.833.5588 fax 949.833.5511
ibigroup.com

PROJECT

The Village at Totem Lake - Building A
Kirkland, Washington

PROJECT NO:	Building A
DRAWN BY:	Author
CHKD' BY:	Checker
SCALE:	1/16" = 1'-0"
DATE:	5/31/2016

SHEET TITLE

SITE PLAN

BLDG	SHEET NUMBER	ISSUE
A	A1001	

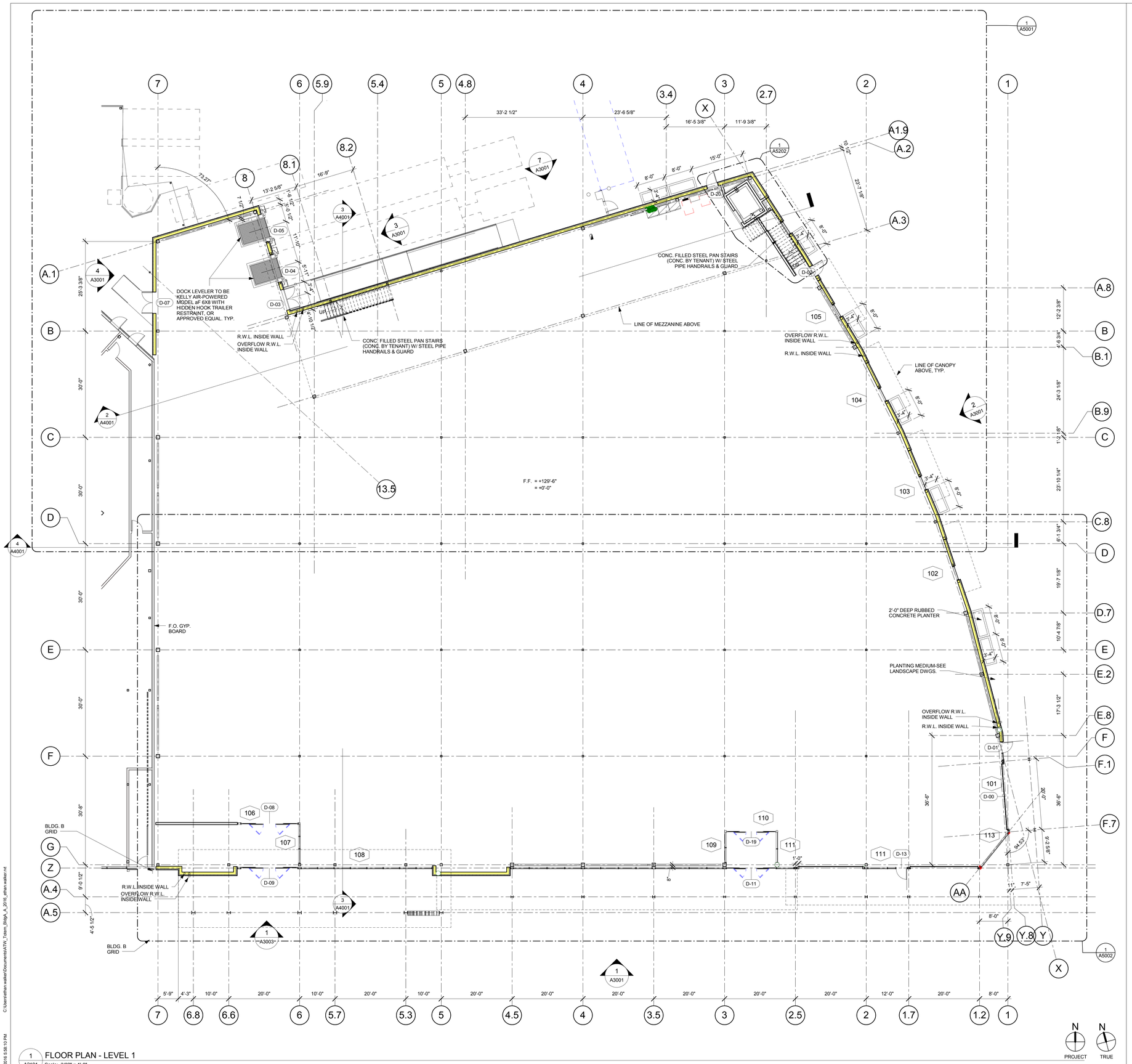

1 A2101 FLOOR PLAN - LEVEL 1
Scale: 3/32" = 1'-0"

CLIENT

CENTERCAL PROPERTIES, LLC

COPYRIGHT:

Any reproduction or distribution for any purpose other than authorized by IBI Group is forbidden. Written dimensions shall have precedence over scaled dimensions. Contractors shall verify and be responsible for all dimensions and conditions on the job, and IBI Group must be informed of any variations from the dimensions and conditions shown on the drawing. Shop drawings shall be submitted to IBI Group for approval before proceeding with fabrication.

COPYRIGHT © 2016 IBI GROUP

ISSUES

NO.	ISSUANCE	STATUS	DATE
1	60% CD SET		5/31/2016

SEAL

10759 REGISTERED ARCHITECT
CRAIG ROTHENBURGER
STATE OF WASHINGTON

SUB CONSULTANT

PRIME CONSULTANT

IBI Group
18401 VON KARMAN AVE, SUITE 110
tel 949.833.5588 fax 949.833.5511
ibigroup.com

PROJECT
The Village at Totem Lake - Building A
Kirkland, Washington

PROJECT NO:	Building A
DRAWN BY:	Author
CHKD' BY:	Checker
SCALE:	3/32" = 1'-0"
DATE:	5/31/2016

SHEET TITLE
FIRST FLOOR PLAN

BLDG	SHEET NUMBER	ISSUE
A	A2101	

5/31/2016 5:58:10 PM C:\Users\ethan.walker\Documents\ATV_Totem_Bldg_A_2016_ethan.walker.rvt

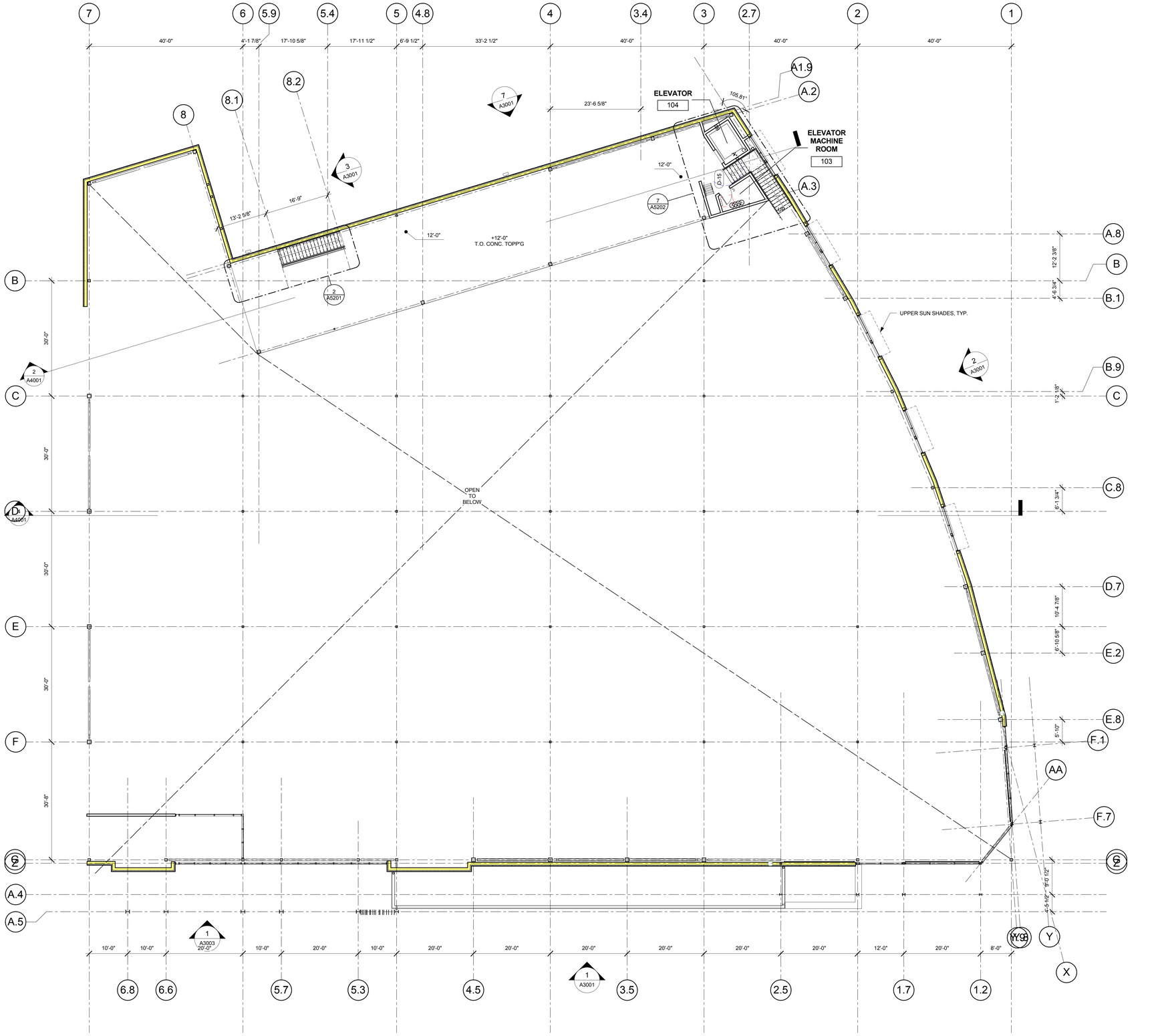

1 A2102 FLOOR PLAN - MEZZANINE
Scale: 3/32" = 1'-0"

N PROJECT
N TRUE

CLIENT

CENTERCAL PROPERTIES, LLC

COPYRIGHT:

Any reproduction or distribution for any purpose other than authorized by IBI Group is forbidden. Written dimensions shall have precedence over scaled dimensions. Contractors shall verify and be responsible for all dimensions and conditions on the job, and report any errors or omissions to the architect then the dimensions and conditions shown on the drawing. Shop drawings shall be submitted to IBI Group for approval before proceeding with fabrication.

COPYRIGHT © 2016 IBI GROUP

ISSUES

NO.	ISSUANCE	STATUS	DATE
1	60% CD SET		5/31/2016

SEAL

10759 REGISTERED ARCHITECT
CRAIG ROTHENBURGER
STATE OF WASHINGTON

SUB CONSULTANT

PRIME CONSULTANT

IBI Group
18401 VON KARMAN AVE. SUITE 110
tel 949.833.5588 fax 949.833.5511
ibigroup.com

PROJECT
The Village at Totem Lake - Building A
Kirkland, Washington

PROJECT NO:	Building A
DRAWN BY:	Author
CHKD' BY:	Checker
SCALE:	3/32" = 1'-0"
DATE:	5/31/2016

SHEET TITLE
MEZANINE PLAN

BLDG	SHEET NUMBER	ISSUE
A	A2102	

C:\Users\jonathan.walker\Documents\ATW_Totem_Bldg\A_A_2016_jethan.walker.rvt

5/31/2016 5:58:11 PM

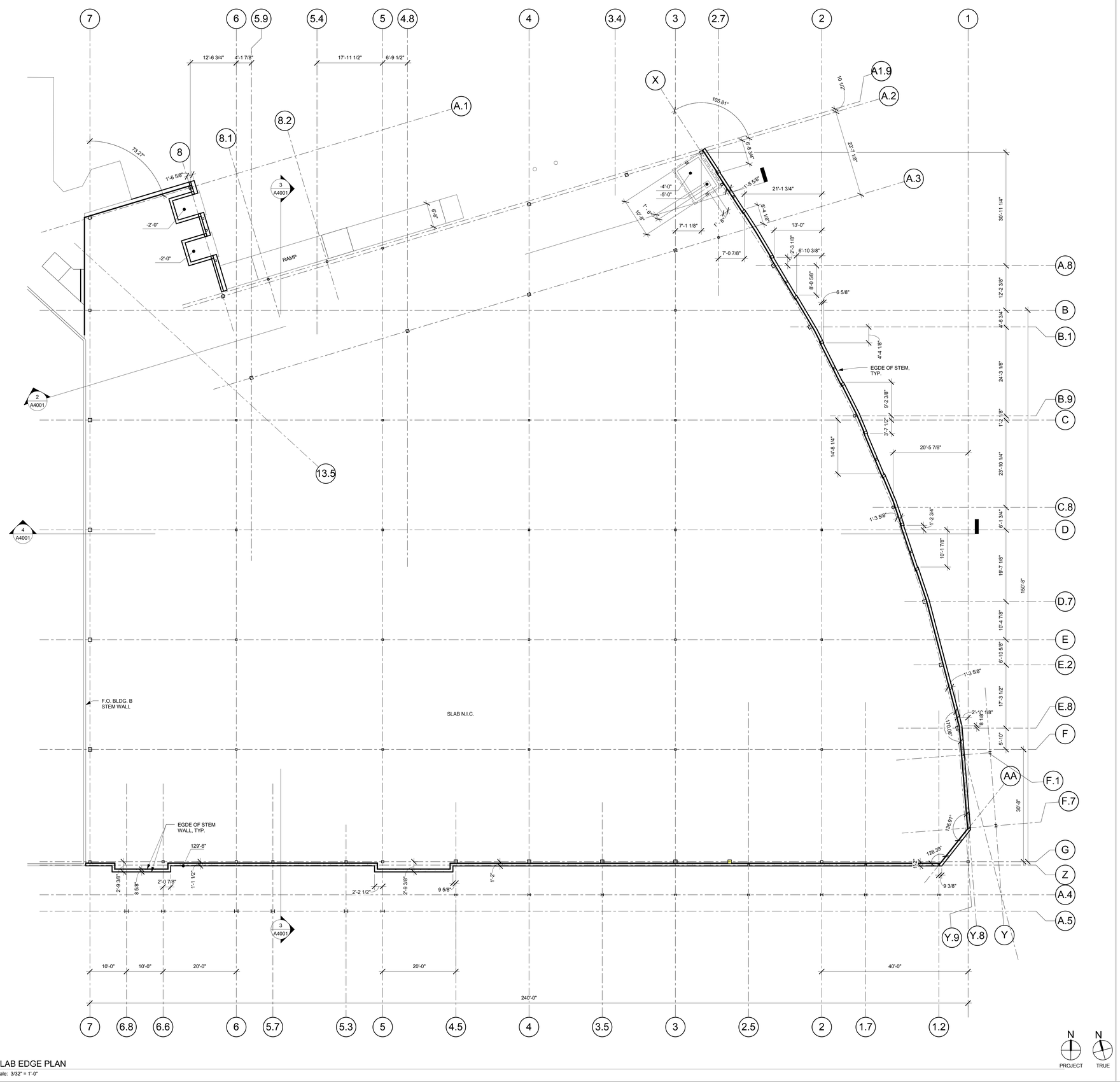

1 SLAB EDGE PLAN
A2201 Scale: 3/32" = 1'-0"

C:\Users\ethan.walker\Documents\ATW_Totem_BldgA_A_2016_ethan.walker.rvt

5/31/2016 5:58:11 PM

CLIENT

CENTERCAL PROPERTIES, LLC

COPYRIGHT:

Any reproduction or distribution for any purpose other than authorized by IBI Group is forbidden. Written dimensions shall have precedence over scaled dimensions. Contractors shall verify and be responsible for all dimensions and conditions on the job and IBI Group shall be informed of any variations from the dimensions and conditions shown on the drawing. Shop drawings shall be submitted to IBI Group for approval before proceeding with fabrication.

COPYRIGHT © 2016 IBI GROUP

ISSUES

NO.	ISSUANCE	STATUS	DATE
1	60% CD SET		5/31/2016

SEAL

10759 REGISTERED ARCHITECT

CRAIG ROTHENBURGER
STATE OF WASHINGTON

SUB CONSULTANT

PRIME CONSULTANT

IBI Group
18401 VON KARMAN AVE, SUITE 110
tel 949.833.5588 fax 949.833.5511
ibigroup.com

PROJECT

The Village at Totem Lake - Building A
Kirkland, Washington

PROJECT NO:	Building A
DRAWN BY:	Author
CHKD' BY:	Checker
SCALE:	3/32" = 1'-0"
DATE:	5/31/2016

SHEET TITLE

SLAB EDGE PLAN

BLDG	SHEET NUMBER	ISSUE
A	A2201	

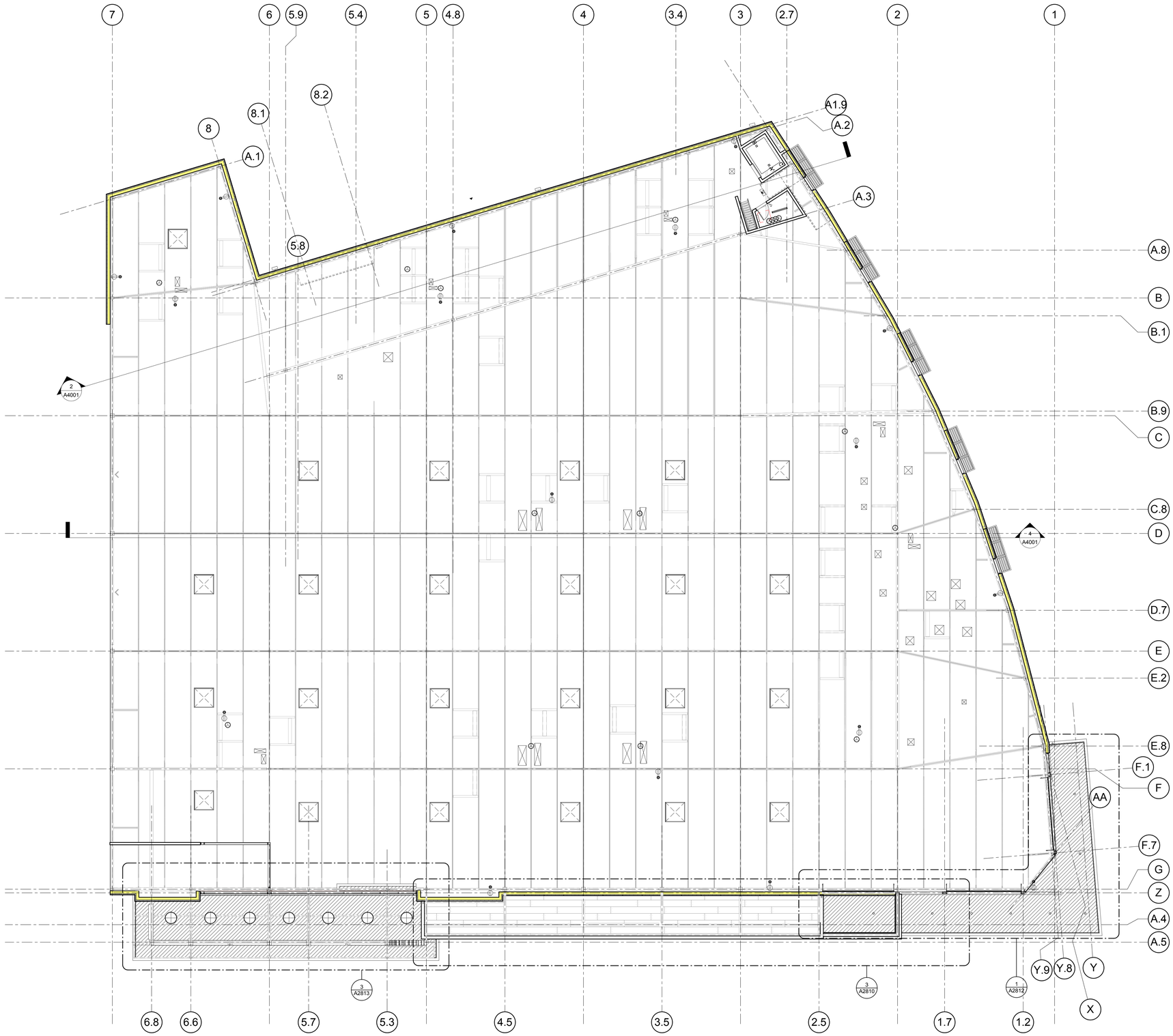

1 A2701 GROUND LEVEL RCP
Scale: 3/32" = 1'-0"

N PROJECT
N TRUE

CLIENT

CENTERCAL PROPERTIES, LLC

COPYRIGHT:

Any reproduction or distribution for any purpose other than authorized by IBI Group is forbidden. Written dimensions shall have precedence over scaled dimensions. Contractors shall verify and be responsible for all dimensions and conditions on the job and IBI Group shall be informed of any variations from the dimensions and conditions shown on the drawing. Shop drawings shall be submitted to IBI Group for approval before proceeding with fabrication.

COPYRIGHT © 2016 IBI GROUP

ISSUES

NO.	ISSUANCE	STATUS	DATE
1	60% CD SET		5/31/2016

SEAL

10759 REGISTERED ARCHITECT
CRAIG ROTHENBURGER
STATE OF WASHINGTON

SUB CONSULTANT

PRIME CONSULTANT

IBI Group
18401 VON KARMAN AVE, SUITE 110
tel 949.833.5588 fax 949.833.5511
ibigroup.com

PROJECT

The Village at Totem Lake - Building A
Kirkland, Washington

PROJECT NO:	Building A
DRAWN BY:	Author
CHKD' BY:	Checker
SCALE:	3/32" = 1'-0"
DATE:	5/31/2016

SHEET TITLE

REFLECTED CEILING PLAN

BLDG	SHEET NUMBER	ISSUE
A	A2701	

C:\Users\ethan.walker\Documents\ATW_Totem_BldgA_A_2016_ethan.walker.rvt

5/31/2016 5:58:13 PM

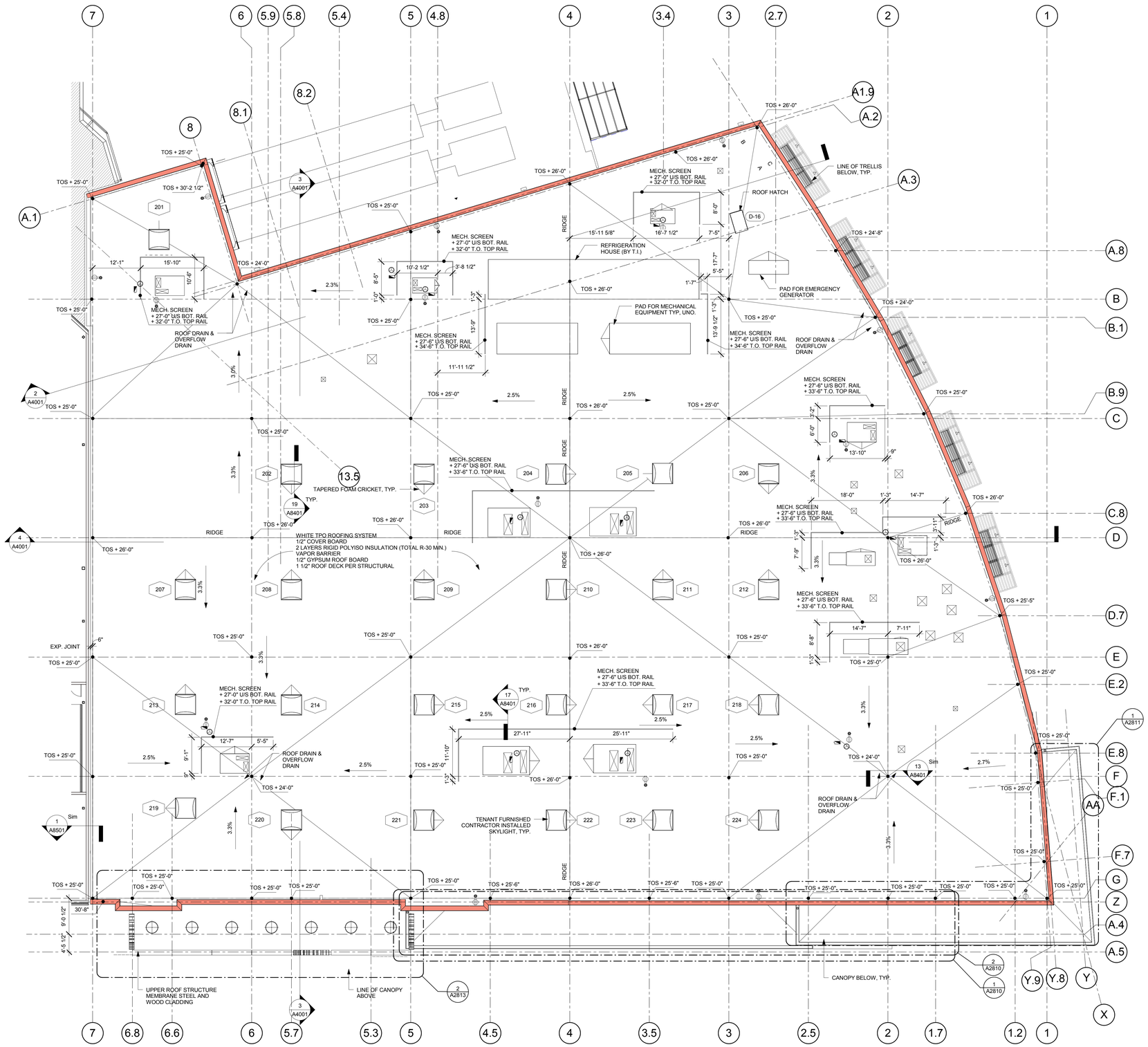

1 A2801 ROOF PLAN
Scale: 3/32" = 1'-0"

PROJECT N TRUE N

CLIENT

CENTERCAL PROPERTIES, LLC

COPYRIGHT:

Any reproduction or distribution for any purpose other than authorized by IBI Group is forbidden. Written dimensions shall have precedence over scaled dimensions. Contractors shall verify and be responsible for all dimensions and conditions on the job, and report any errors, omissions or conflicts in the dimensions and conditions shown on the drawing. Shop drawings shall be submitted to IBI Group for approval before proceeding with fabrication.

COPYRIGHT © 2016 IBI GROUP

ISSUES

NO.	ISSUANCE	STATUS	DATE
1	60% CD SET		5/31/2016

SEAL

10759 REGISTERED ARCHITECT
CRAIG ROTHENBURGER
STATE OF WASHINGTON

SUB CONSULTANT

PRIME CONSULTANT

IBI Group
18401 VON KARMAN AVE, SUITE 110
tel 949.833.5588 fax 949.833.5511
ibigroup.com

PROJECT
The Village at Totem Lake - Building A
Kirkland, Washington

PROJECT NO:	Building A
DRAWN BY:	Author
CHKD' BY:	Checker
SCALE:	3/32" = 1'-0"
DATE:	5/31/2016

SHEET TITLE
ROOF PLAN

BLDG	SHEET NUMBER	ISSUE
A	A2801	

C:\Users\ethan.walker\Documents\ATW_Totem_Bldg_A_2016_ethan.walker.rvt
5/31/2016 5:08:13 PM

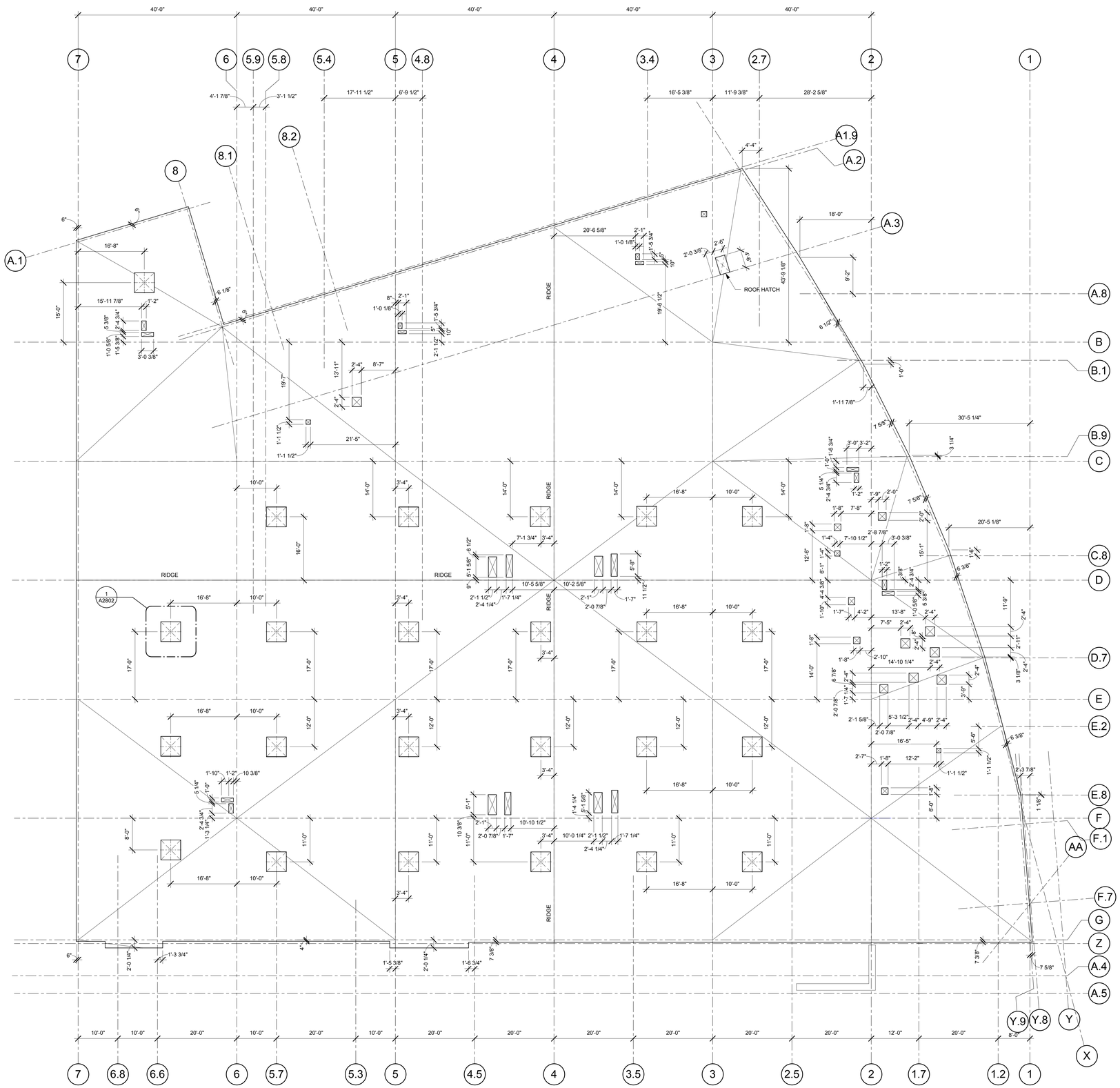

5 ROOF PLAN EDGE PLAN
A2802 Scale: 3/32" = 1'-0"

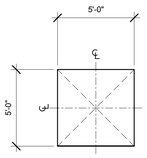

1 TYP. SKYLIGHT OPENING
A2802 Scale: 1/4" = 1'-0"

CLIENT

CENTERCAL PROPERTIES, LLC

COPYRIGHT:

Any reproduction or distribution for any purpose other than authorized by IBI Group is forbidden. Written dimensions shall have precedence over scaled dimensions. Contractors shall verify and be responsible for all dimensions and conditions on the job, and IBI Group must be informed of any variation from the dimensions and conditions shown on the drawing. Shop drawings shall be submitted to IBI Group for approval before proceeding with fabrication.

COPYRIGHT © 2016 IBI GROUP

ISSUES

NO.	ISSUANCE	STATUS	DATE
1	60% CD SET		5/31/2016

SEAL

10759 REGISTERED ARCHITECT
CRAIG ROTHENBURGER
STATE OF WASHINGTON

SUB CONSULTANT

PRIME CONSULTANT

IBI Group
15401 VON KARMAN AVE, SUITE 110
tel 949.833.5588 fax 949.833.5511
ibigroup.com

PROJECT
The Village at Totem Lake - Building A
Kirkland, Washington

PROJECT NO:	Building A
DRAWN BY:	Author
CHKD' BY:	Checker
SCALE:	As indicated
DATE:	5/31/2016

SHEET TITLE
ROOF EDGE PLAN

BLDG	SHEET NUMBER	ISSUE
A	A2802	

5/31/2016 5:58:13 PM C:\Users\ethan.walker\Documents\ATV_Totem_Bldg A_2016_ethan.walker.rvt

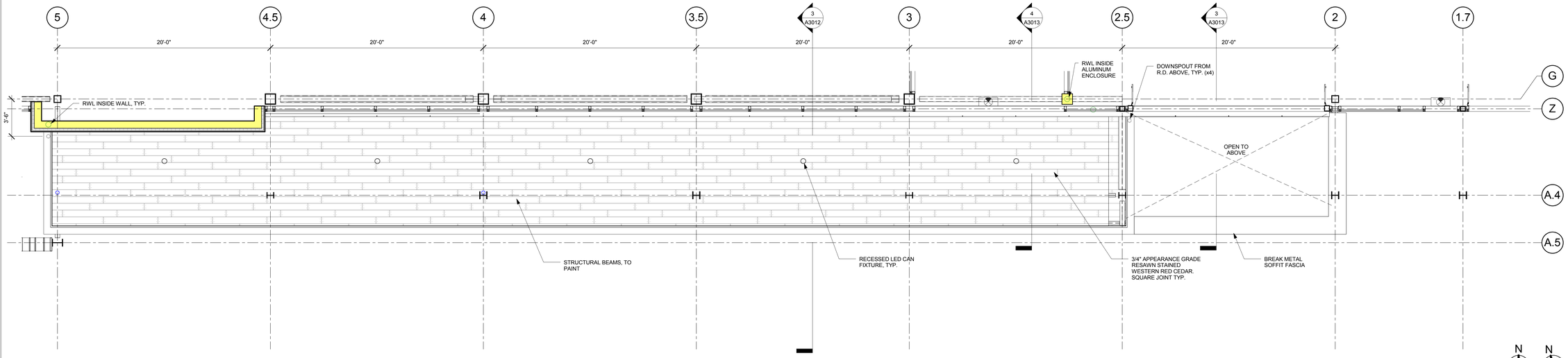

3 A2810 LOW SOUTH CANOPY - RCP
Scale: 1/4" = 1'-0"

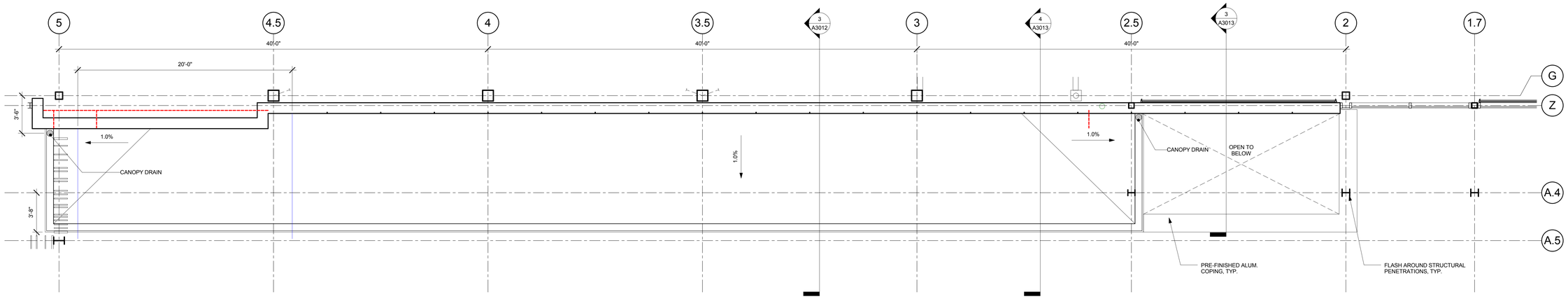

2 A2810 LOW SOUTH CANOPY - ENCLOSURE PLAN
Scale: 1/4" = 1'-0"

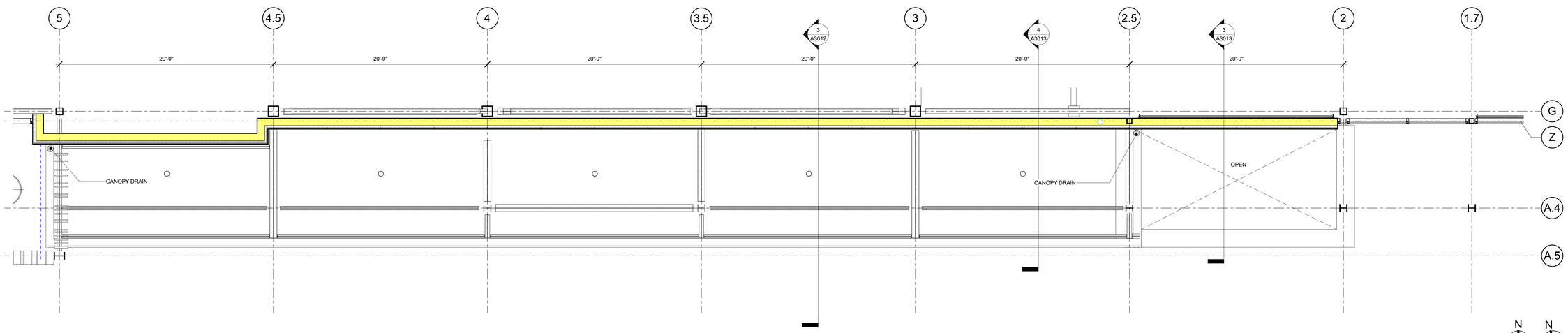

1 A2810 LOW SOUTH CANOPY - FRAMING PLAN
Scale: 1/4" = 1'-0"

CLIENT

CENTERCAL PROPERTIES, LLC

COPYRIGHT:

Any reproduction or distribution for any purpose other than authorized by IBI Group is forbidden. Written dimensions shall have precedence over scaled dimensions. Contractors shall verify and be responsible for all dimensions and conditions on the job and IBI Group shall be informed of any variations from the dimensions and conditions shown on the drawing. Shop drawings shall be submitted to IBI Group for approval before proceeding with fabrication.

COPYRIGHT © 2016 IBI GROUP

ISSUES

NO.	ISSUANCE	STATUS	DATE
1	60% CD SET		5/31/2016

SEAL

10759 REGISTERED ARCHITECT
CRAIG ROTHENBURGER
STATE OF WASHINGTON

SUB CONSULTANT

PRIME CONSULTANT

IBI Group
18401 VON KARMAN AVE, SUITE 110
tel 949.833.5588 fax 949.833.5511
ibigroup.com

PROJECT
The Village at Totem Lake - Building A
Kirkland, Washington

PROJECT NO:	Building A
DRAWN BY:	Author
CHKD' BY:	Checker
SCALE:	1/4" = 1'-0"
DATE:	5/31/2016

SHEET TITLE
LOW SOUTH CANOPY PLANS

BLDG	SHEET NUMBER	ISSUE
A	A2810	

C:\Users\ethan.walker\Documents\ATW_Totem_Bldg\A_A_2016_ethan.walker.rvt
5/31/2016 5:58:14 PM

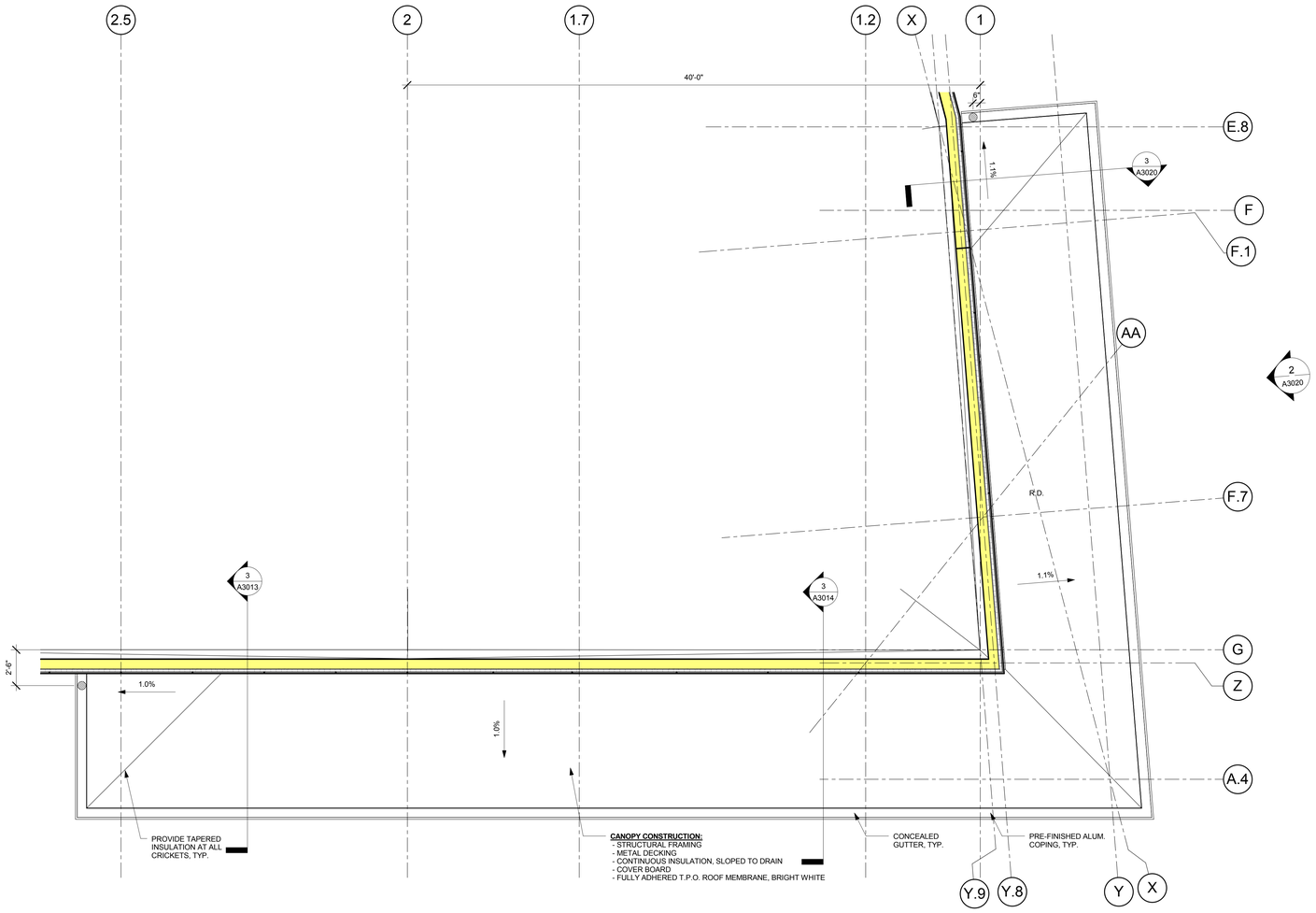

1 A2811 HIGH SOUTH CANOPY - ENCLOSURE PLAN
Scale: 1/4" = 1'-0"

N PROJECT
N TRUE

CLIENT

CENTERCAL PROPERTIES, LLC

COPYRIGHT:

Any reproduction or distribution for any purpose other than authorized by IBI Group is forbidden. Written dimensions shall have precedence over scaled dimensions. Contractors shall verify and be responsible for all dimensions and conditions on this drawing. No ordinance, request or interpretation can alter the dimensions and conditions shown on the drawing. Shop drawings shall be submitted to IBI Group for approval before proceeding with fabrication.

COPYRIGHT © 2016 IBI GROUP

ISSUES

NO.	ISSUANCE	STATUS	DATE
1	60% CD SET		5/31/2016

SEAL

10759 REGISTERED ARCHITECT
CRAIG ROTHENBURGER
STATE OF WASHINGTON

SUB CONSULTANT

PRIME CONSULTANT

IBI Group
18401 VON KARMAN AVE, SUITE 110
tel 949.833.5588 fax 949.833.5511
ibigroup.com

PROJECT
The Village at Totem Lake - Building A
Kirkland, Washington

PROJECT NO:	Building A
DRAWN BY:	Author
CHKD' BY:	Checker
SCALE:	1/4" = 1'-0"
DATE:	5/31/2016

SHEET TITLE
HIGH SOUTH CANOPY PLAN

BLDG	SHEET NUMBER	ISSUE
A	A2811	

5/31/2016 5:56:14 PM C:\Users\ethan.walker\Documents\ATV_Totem_Bldg\A_2016_ethan.walker.rvt

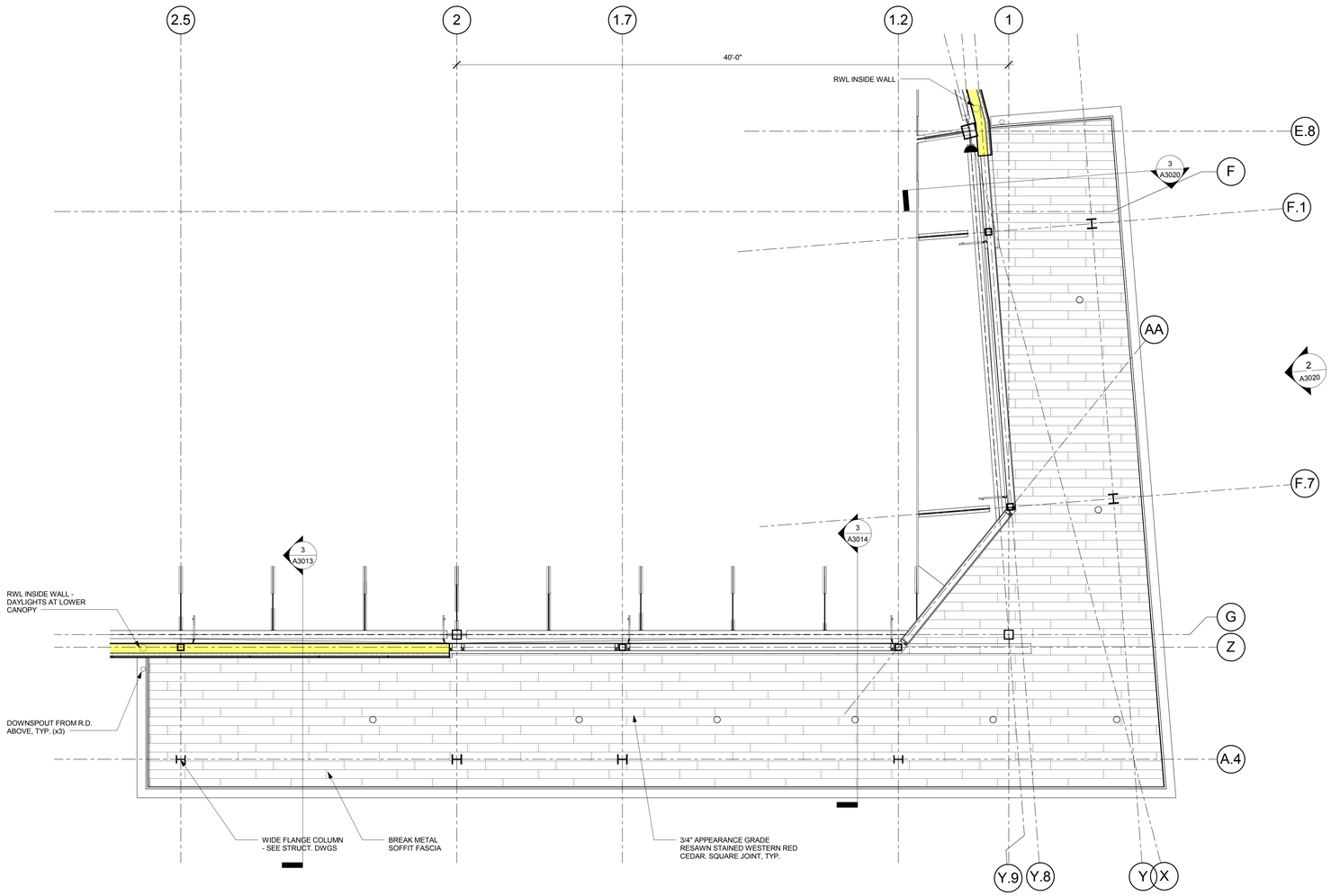

1 HIGH SOUTH CANOPY - RCP
A2812 Scale: 1/4" = 1'-0"

N PROJECT
N TRUE

CLIENT

CENTERCAL PROPERTIES, LLC

COPYRIGHT:

Any reproduction or distribution for any purpose other than authorized by IBI Group is forbidden. Written dimensions shall have precedence over scaled dimensions. Contractors shall verify and be responsible for all dimensions and conditions on the job and IBI Group shall be informed of any variations from the dimensions and conditions shown on the drawing. Shop drawings shall be submitted to IBI Group for approval before proceeding with fabrication.

COPYRIGHT © 2016 IBI GROUP

ISSUES

NO.	ISSUANCE	STATUS	DATE
1	60% CD SET		5/31/2016

SEAL

10759 REGISTERED ARCHITECT
CRAIG ROTHENBURGER
STATE OF WASHINGTON

SUB CONSULTANT

PRIME CONSULTANT

IBI Group
18401 VON KARMAN AVE, SUITE 110
tel 949.833.5588 fax 949.833.5511
ibigroup.com

PROJECT
The Village at Totem Lake - Building A
Kirkland, Washington

PROJECT NO:	Building A
DRAWN BY:	Author
CHKD' BY:	Checker
SCALE:	1/4" = 1'-0"
DATE:	5/31/2016

SHEET TITLE
HIGH SOUTH CANOPY PLANS

BLDG	SHEET NUMBER	ISSUE
A	A2812	

C:\Users\ethan.walker\Documents\ATW_Totem_Bldg\A_A_2016_ethan.walker.rvt

5/31/2016 5:58:15 PM

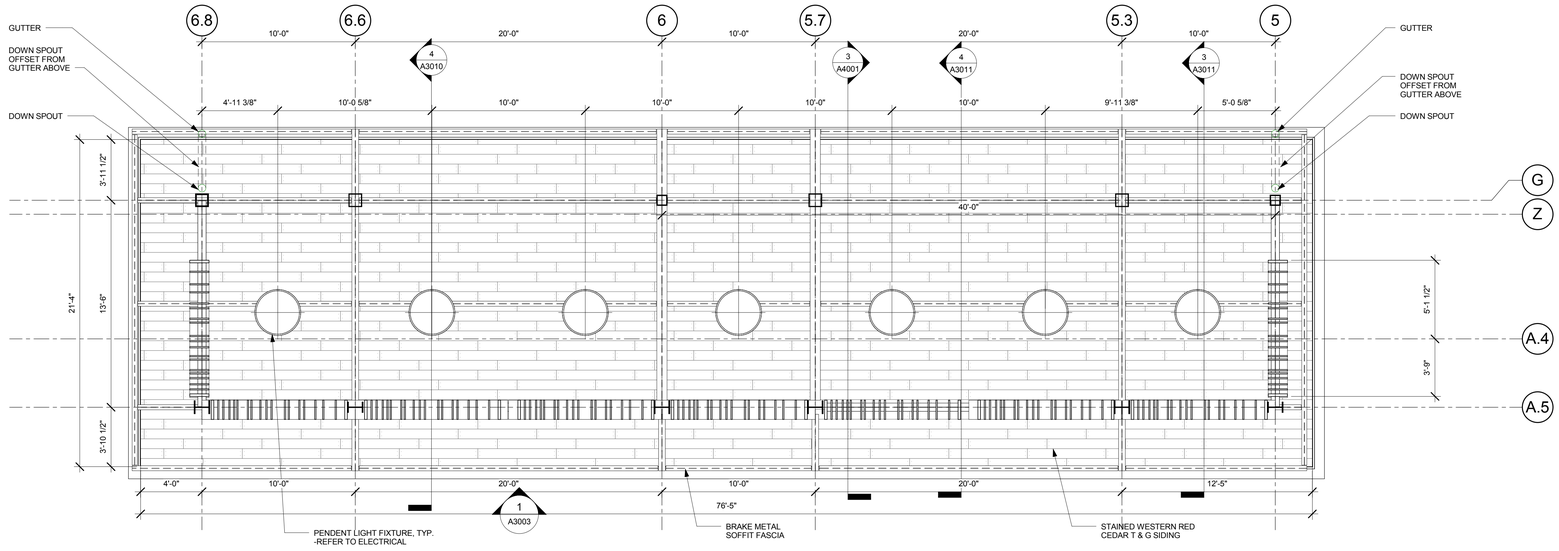

3 / A2813 HIGH WEST CANOPY - RCP
Scale: 1/4" = 1'-0"

N PROJECT N TRUE

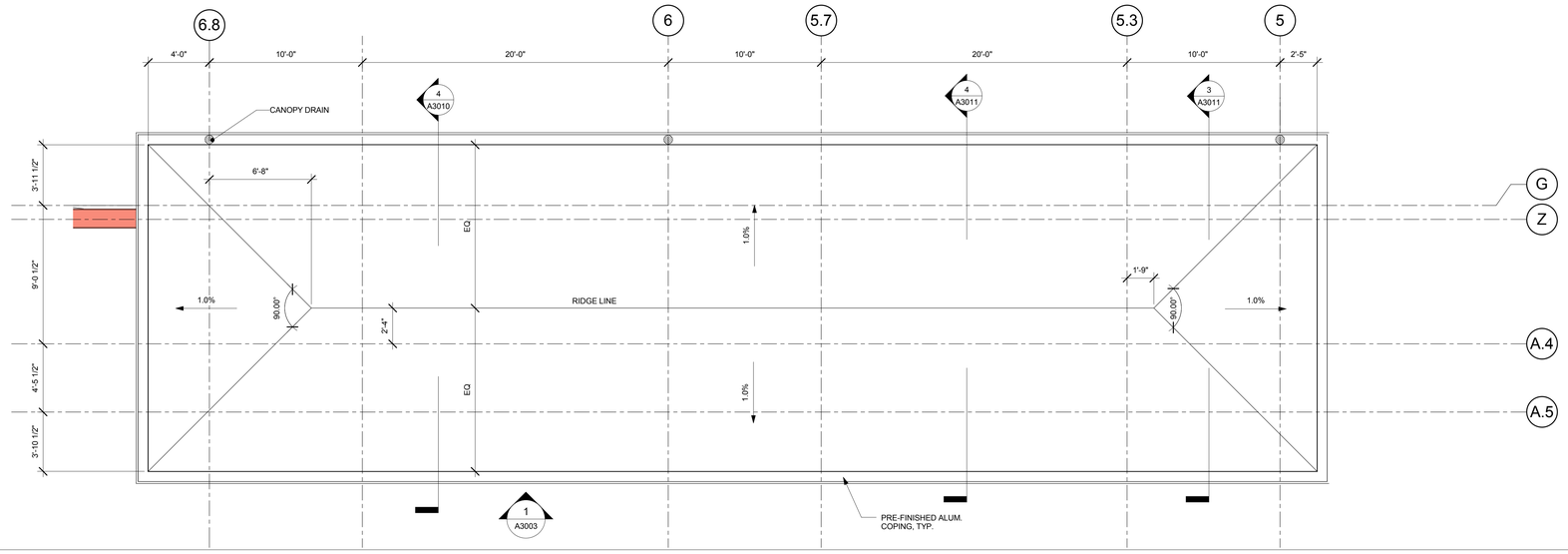

2 / A2813 HIGH WEST CANOPY - ENCLOSURE PLAN
Scale: 1/4" = 1'-0"

N PROJECT N TRUE

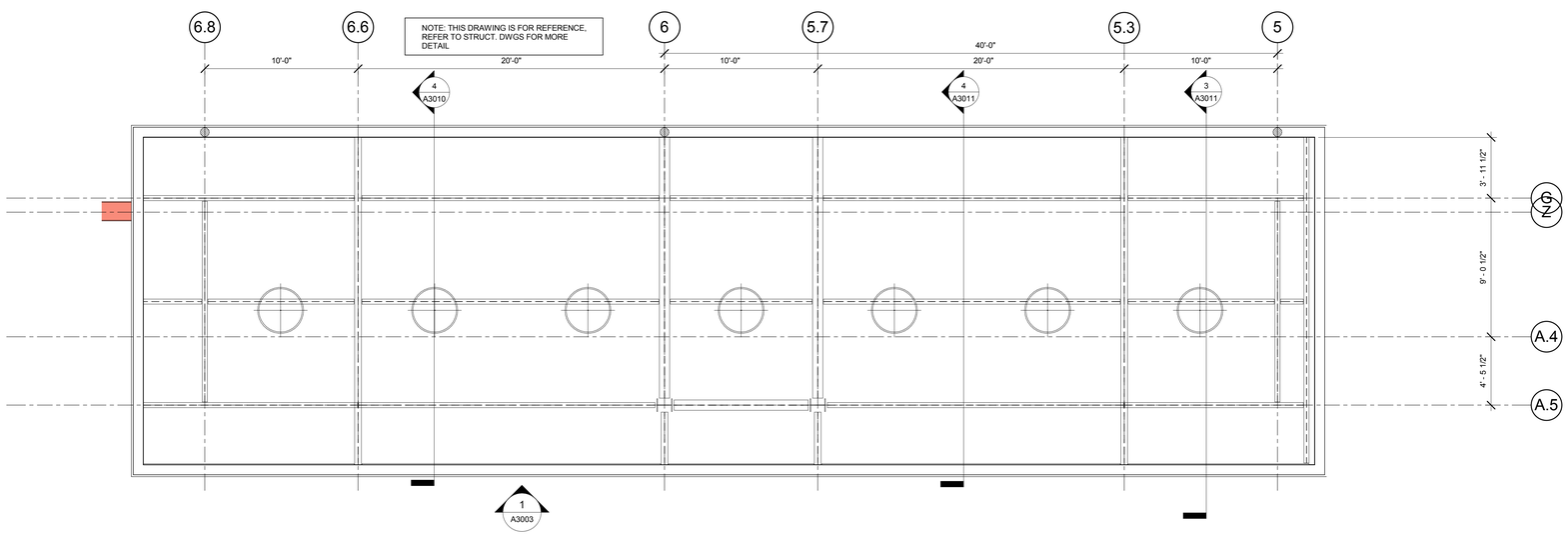

1 / A2813 HIGH WEST CANOPY - FRAMING PLAN
Scale: 1/4" = 1'-0"

N PROJECT N TRUE

CLIENT

CENTERCAL PROPERTIES, LLC

COPYRIGHT:

Any reproduction or distribution for any purpose other than authorized by IBI Group is forbidden. Written dimensions shall have precedence over scaled dimensions. Contractors shall verify and be responsible for all dimensions and conditions on the job, and report any errors or omissions to the architect then the dimensions and conditions shown on the drawing. Shop drawings shall be submitted to IBI Group for approval before proceeding with fabrication.

COPYRIGHT © 2016 IBI GROUP

ISSUES

NO.	ISSUANCE	STATUS	DATE
1	60% CD SET		5/31/2016

SEAL

10759 REGISTERED ARCHITECT
CRAIG ROTHENBURGER
STATE OF WASHINGTON

SUB CONSULTANT

PRIME CONSULTANT

IBI Group
18401 VON KARMAN AVE, SUITE 110
tel 949.833.5588 fax 949.833.5511
ibigroup.com

PROJECT

The Village at Totem Lake - Building A
Kirkland, Washington

PROJECT NO:	Building A
DRAWN BY:	Author
CHKD' BY:	Checker
SCALE:	1/4" = 1'-0"
DATE:	5/31/2016

SHEET TITLE

HIGH WEST CANOPY PLANS

BLDG	SHEET NUMBER	ISSUE
A	A2813	

C:\Users\nathan.walker\Documents\ATW_Totem_Bldg\A_A_2016_nthan.walker.rvt

5/31/2016 5:08:15 PM

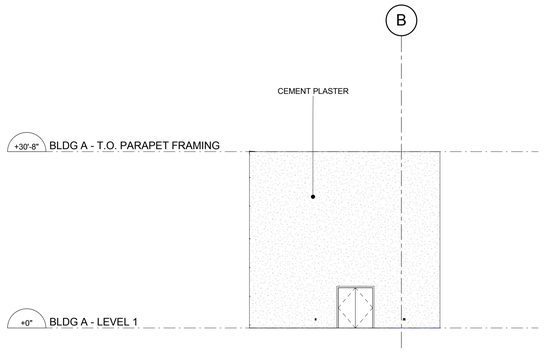

4 A3001 WEST ELEVATION
Scale: 3/32" = 1'-0"

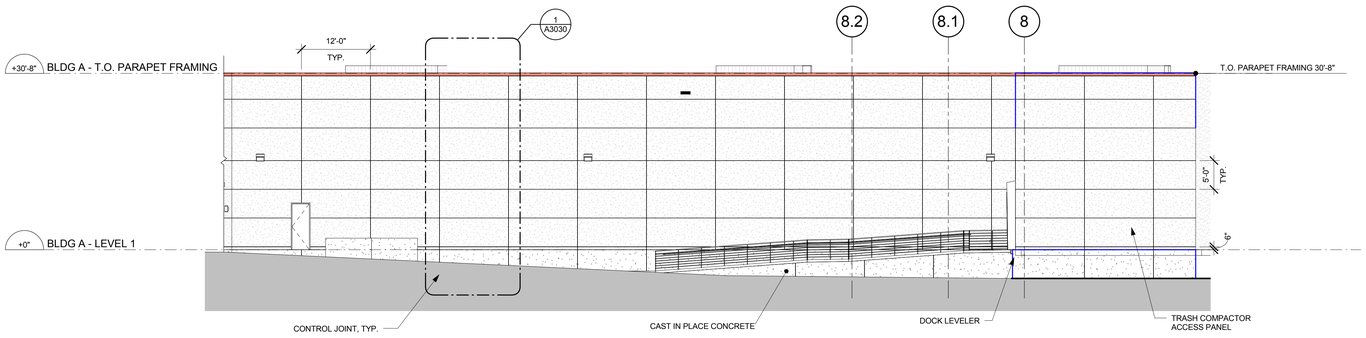

7 A3001 NORTH ELEVATION
Scale: 3/32" = 1'-0"

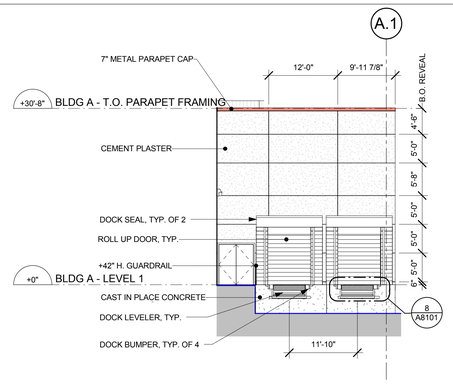

3 A3001 DOCK ELEVATION
Scale: 3/32" = 1'-0"

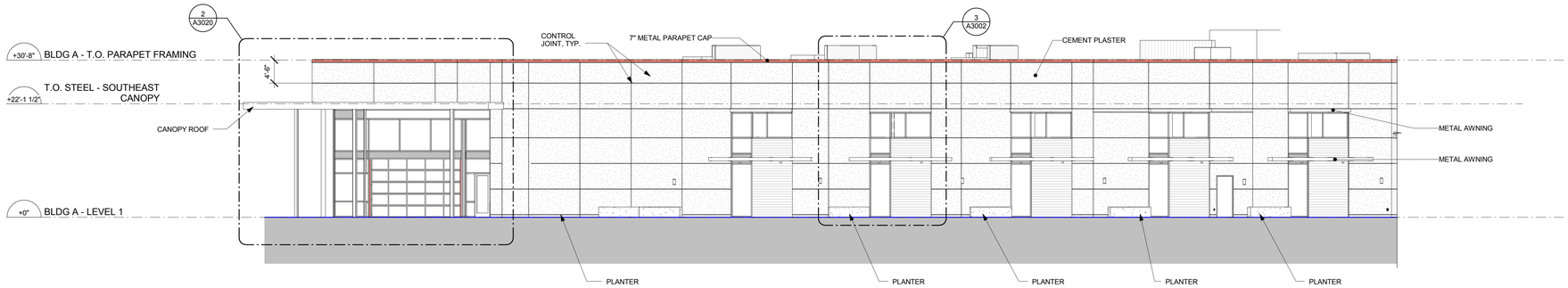

2 A3001 EAST ELEVATION
Scale: 3/32" = 1'-0"

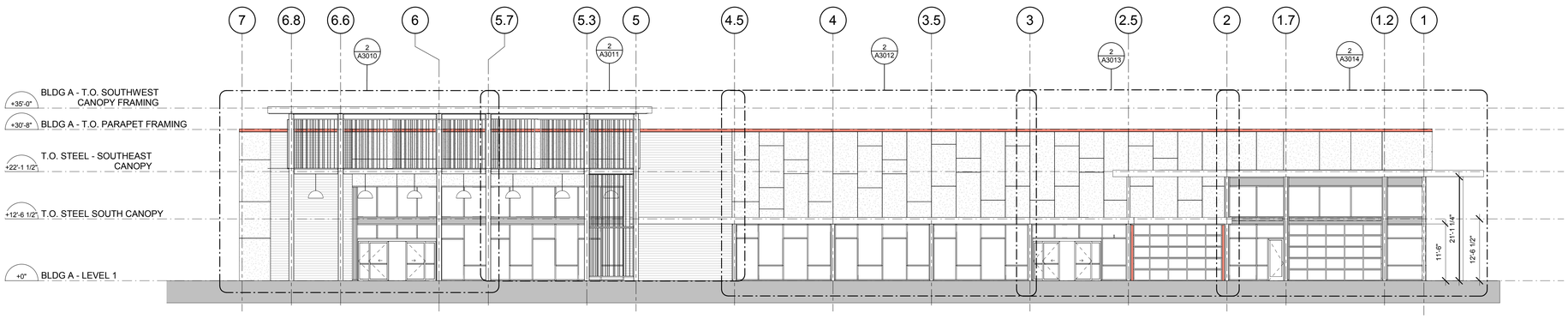

1 A3001 SOUTH ELEVATION-
Scale: 3/32" = 1'-0"

CLIENT

CENTERCAL PROPERTIES, LLC

COPYRIGHT:

Any reproduction or distribution for any purpose other than authorized by IBI Group is forbidden. Written dimensions shall have precedence over scaled dimensions. Contractors shall verify and be responsible for all dimensions and conditions on the job and IBI Group shall be informed of any variations from the dimensions and conditions shown on the drawing. Shop drawings shall be submitted to IBI Group for approval before proceeding with fabrication.

COPYRIGHT © 2016 IBI GROUP

ISSUES

NO.	ISSUANCE	STATUS	DATE
1	60% CD SET		5/31/2016

SEAL

10759 REGISTERED ARCHITECT
CRAIG ROTHENBURGER
STATE OF WASHINGTON

SUB CONSULTANT

PRIME CONSULTANT

IBI Group
18401 VON KARMAN AVE, SUITE 110
tel 949.833.5588 fax 949.833.5511
ibigroup.com

PROJECT
The Village at Totem Lake - Building A
Kirkland, Washington

PROJECT NO:	Building A
DRAWN BY:	Author
CHKD' BY:	Checker
SCALE:	3/32" = 1'-0"
DATE:	5/31/2016

SHEET TITLE
OVERALL EXTERIOR ELEVATIONS

BLDG	SHEET NUMBER	ISSUE
A	A3001	

C:\Users\ethan.walker\Documents\ATW_Totem_BldgA_A_2016_ethan.walker.rvt

5/31/2016 5:58:18 PM

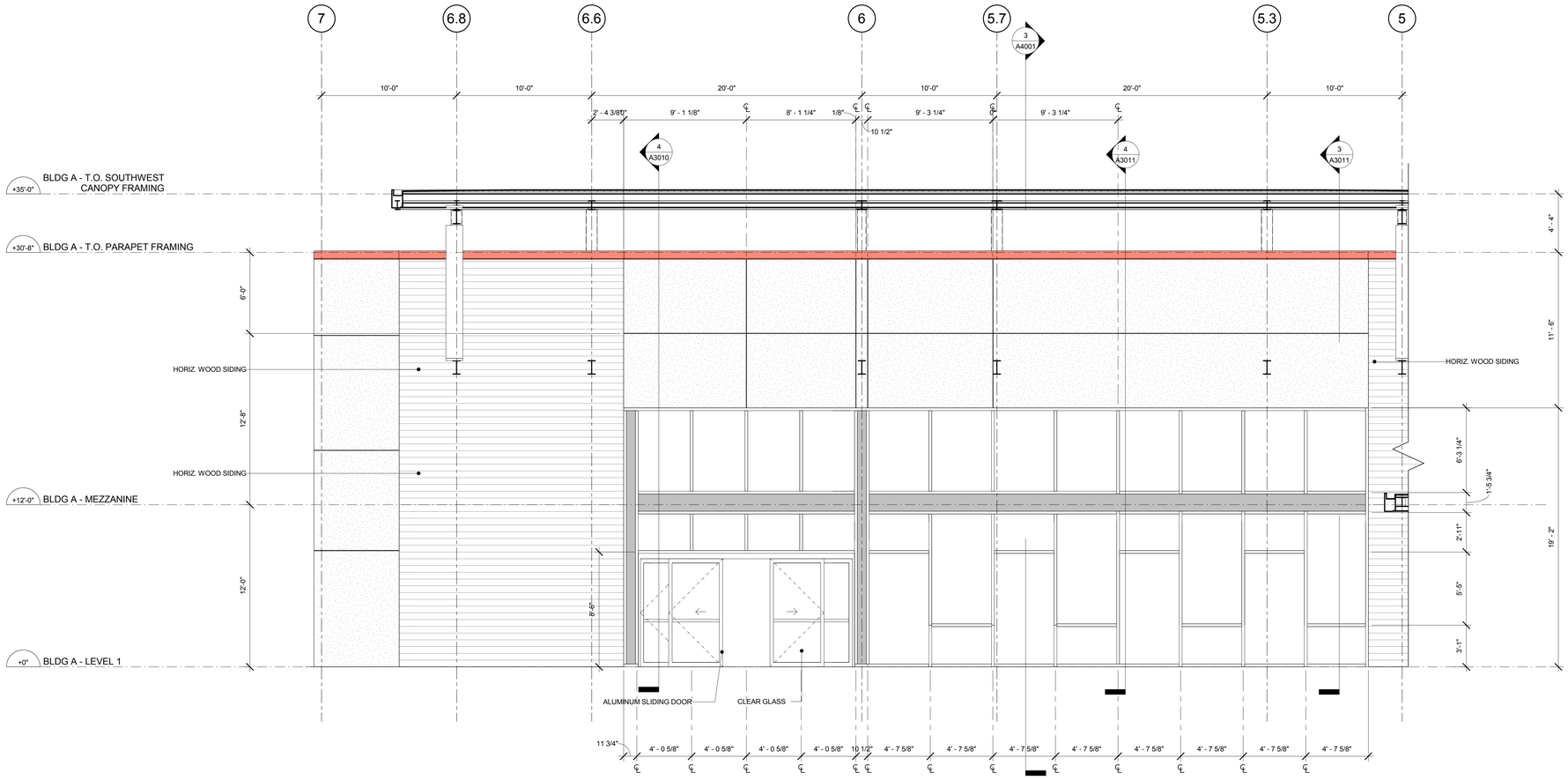

1 A3003 ENLARGED ELEVATION - ENTRY
Scale: 1/4" = 1'-0"

5/31/2016 5:58:18 PM C:\Users\nathan.walker\Documents\ATW_Totem_Bldg A_2016_nthan.walker.rvt

CLIENT

CENTERCAL PROPERTIES, LLC

COPYRIGHT:

Any reproduction or distribution for any purpose other than authorized by IBI Group is forbidden. Written dimensions shall have precedence over scaled dimensions. Contractors shall verify and be responsible for all dimensions and conditions on this drawing. No ordinary minor variations from dimensions shall void the dimensions and conditions shown on the drawing. Shop drawings shall be submitted to IBI Group for approval before proceeding with fabrication.

COPYRIGHT © 2016 IBI GROUP

ISSUES

NO.	ISSUANCE	STATUS	DATE
1	60% CD SET		5/31/2016

SEAL

10759 REGISTERED ARCHITECT
CRAIG ROTHENBURGER
STATE OF WASHINGTON

SUB CONSULTANT

PRIME CONSULTANT

IBI Group
18401 VON KARMAN AVE. SUITE 110
tel 949.833.5588 fax 949.833.5511
ibigroup.com

PROJECT
The Village at Totem Lake - Building A
Kirkland, Washington

PROJECT NO:	Building A
DRAWN BY:	Author
CHKD' BY:	Checker
SCALE:	1/4" = 1'-0"
DATE:	5/31/2016

SHEET TITLE
ENLARGED ELEVATIONS

BLDG	SHEET NUMBER	ISSUE
A	A3003	

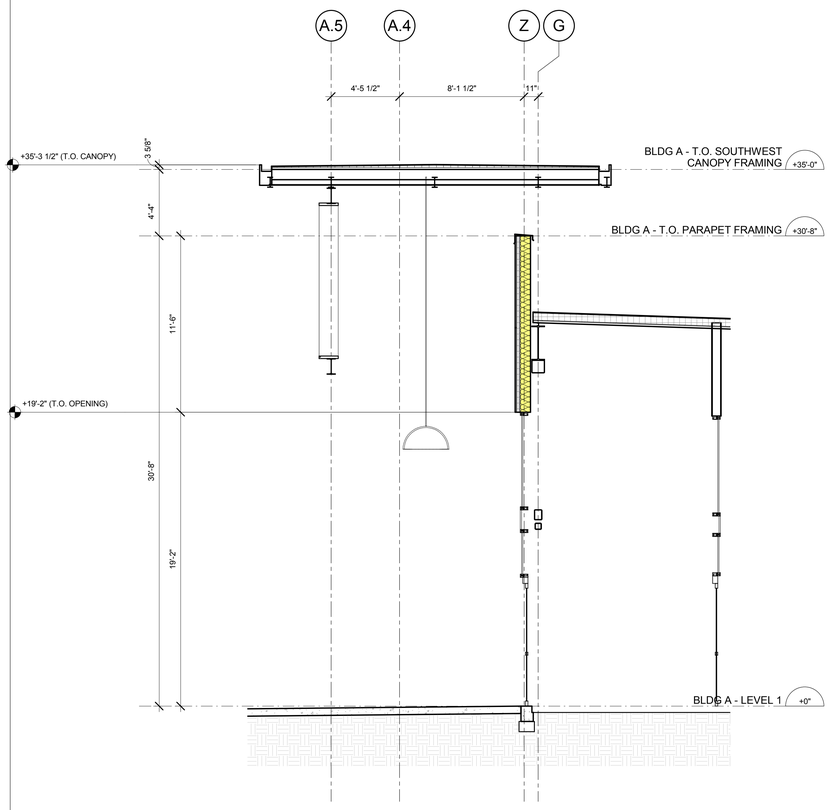

4 A3010 WALL SECTION B
Scale: 1/4" = 1'-0"

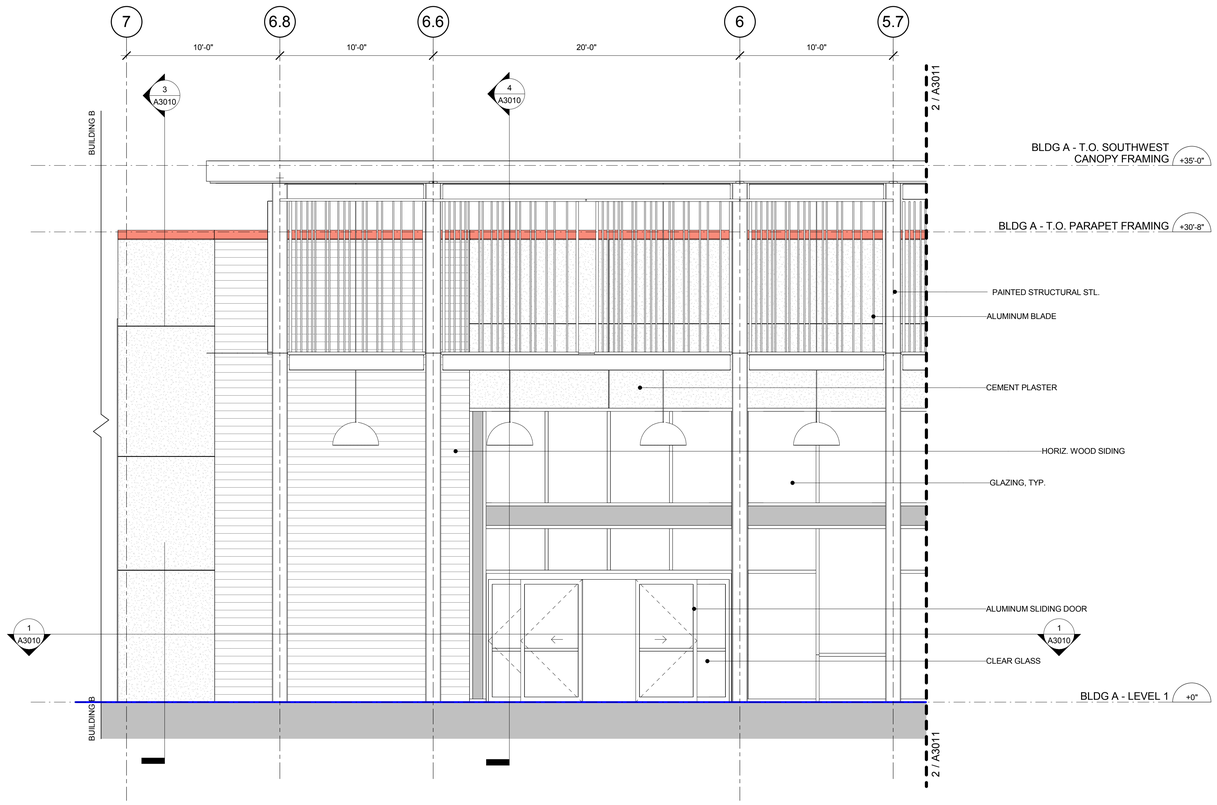

2 A3010 ENLARGED ENTRY ELEVATION
Scale: 1/4" = 1'-0"

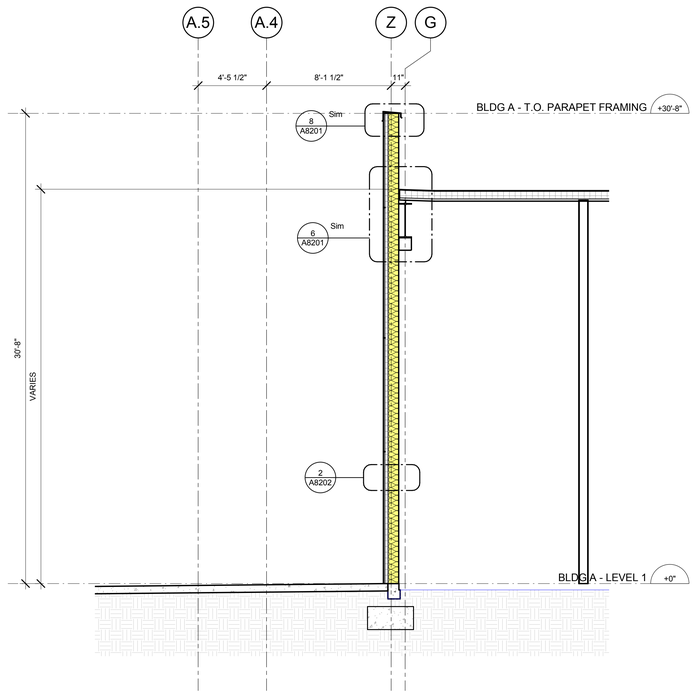

3 A3010 WALL SECTION A
Scale: 1/4" = 1'-0"

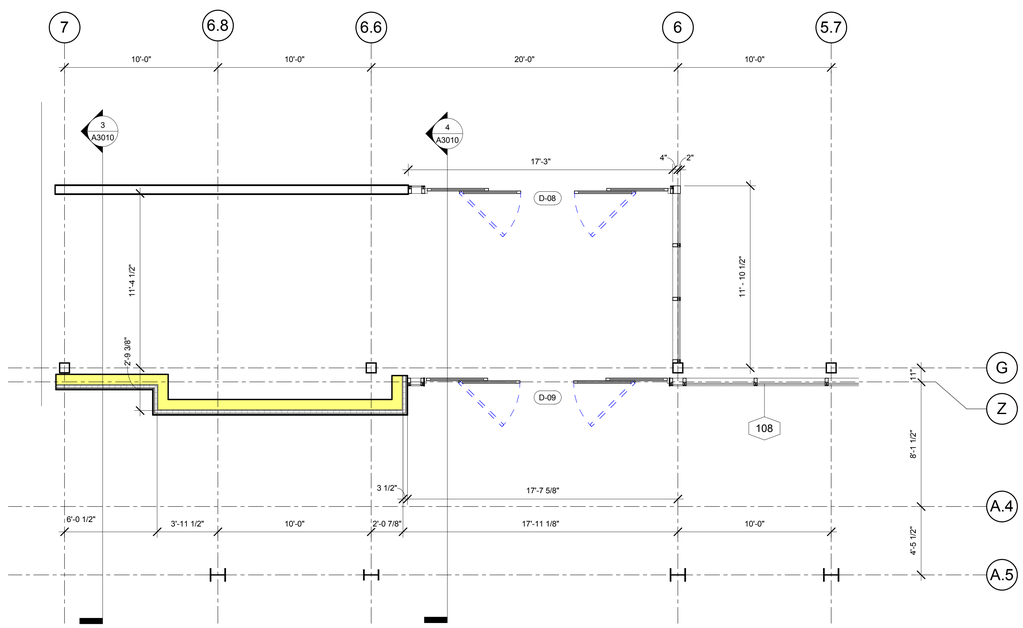

1 A3010 PARTIAL LEVEL 1 PLAN - ENTRY
Scale: 1/4" = 1'-0"

N PROJECT
N TRUE

CLIENT
CENTERCAL PROPERTIES, LLC

COPYRIGHT:
Any reproduction or distribution for any purpose other than authorized by IBI Group is forbidden. Written dimensions shall have precedence over scaled dimensions. Contractors shall verify and be responsible for all dimensions and conditions on the job and IBI Group shall be informed of any variations from the dimensions and conditions shown on the drawing. Shop drawings shall be submitted to IBI Group for approval before proceeding with fabrication.
COPYRIGHT © 2016 IBI GROUP

ISSUES

NO.	ISSUANCE	STATUS	DATE
1	60% CD SET		5/31/2016

SEAL
10759 REGISTERED ARCHITECT
CRAIG ROTHENBURGER STATE OF WASHINGTON

SUB CONSULTANT

PRIME CONSULTANT
IBI Group
18401 VON KARMAN AVE, SUITE 110
tel 949.833.5588 fax 949.833.5511
ibigroup.com

PROJECT
The Village at Totem Lake - Building A
Kirkland, Washington

PROJECT NO:	Building A
DRAWN BY:	Author
CHKD' BY:	Checker
SCALE:	1/4" = 1'-0"
DATE:	5/31/2016

SHEET TITLE
ENLARGED SOUTH ELEVATION, PARTIAL PLAN & WALL SECTIONS

BLDG	SHEET NUMBER	ISSUE
A	A3010	

C:\Users\ethan.walker\Documents\ATW_Totem_Bldgh_A_2016_ethan.walker.rvt
5/31/2016 5:58:19 PM

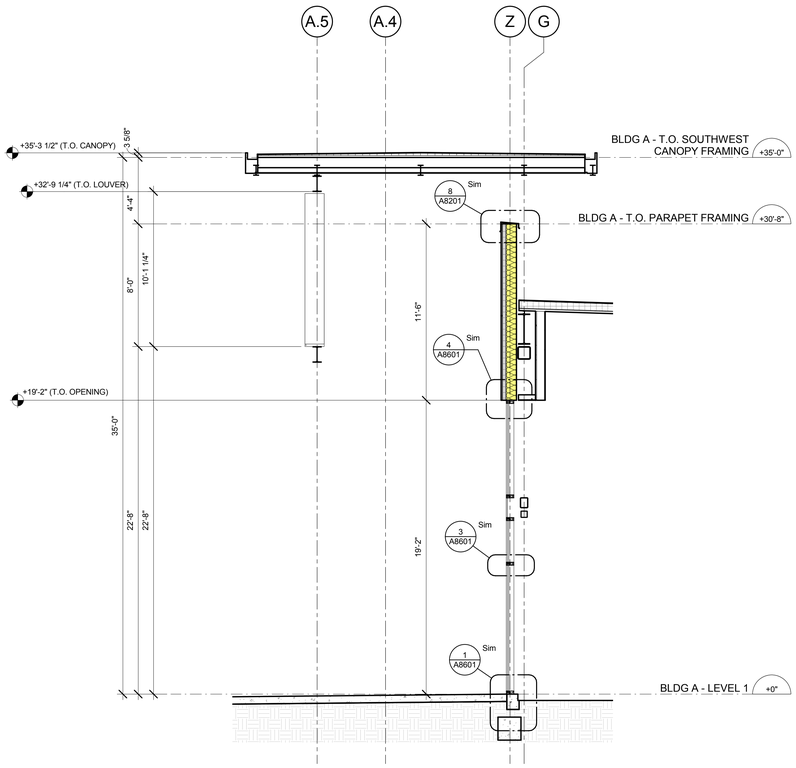

4 A3011 WALL SECTION D
Scale: 1/4" = 1'-0"

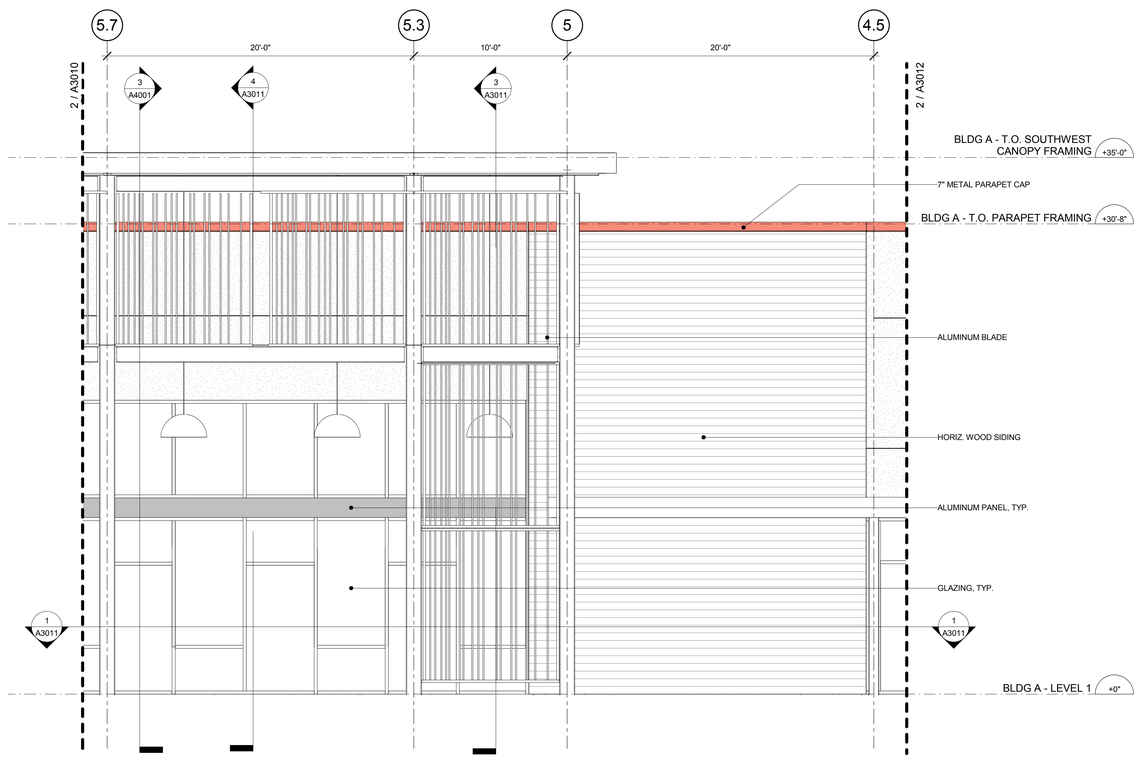

2 A3011 ENLARGED ENTRY ELEVATION
Scale: 1/4" = 1'-0"

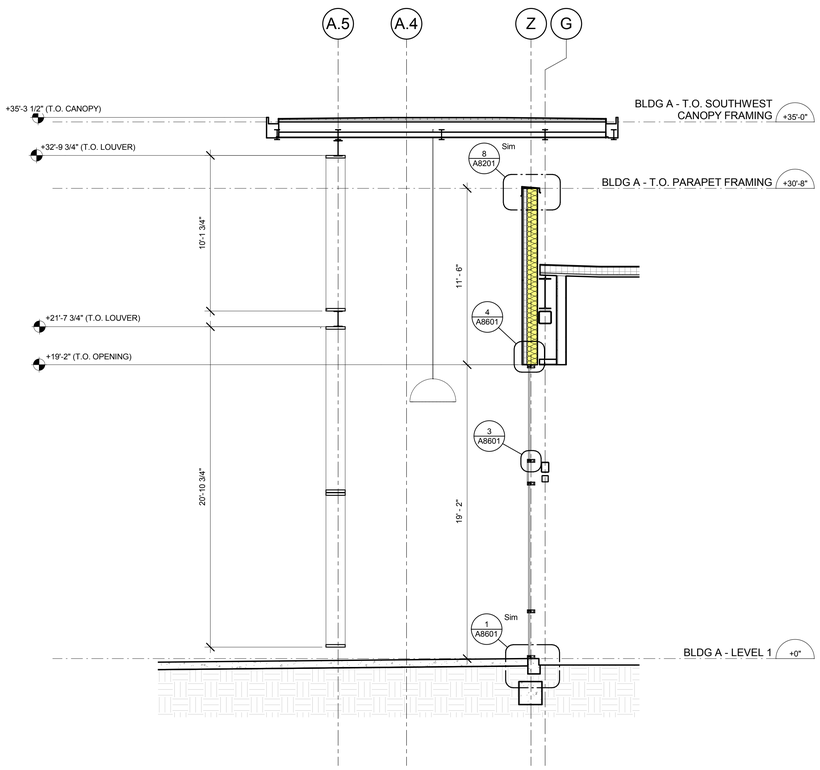

3 A3011 WALL SECTION C
Scale: 1/4" = 1'-0"

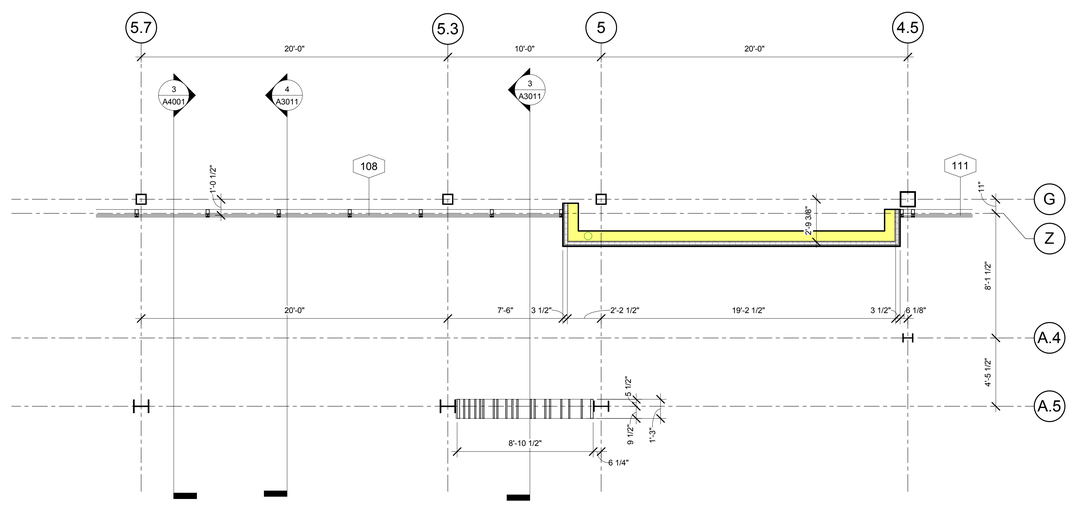

1 A3011 PARTIAL LEVEL 1 PLAN - ENTRY
Scale: 1/4" = 1'-0"

N PROJECT
N TRUE

CLIENT
CENTERCAL PROPERTIES, LLC

COPYRIGHT:
Any reproduction or distribution for any purpose other than authorized by IBI Group is forbidden. Written dimensions shall have precedence over scaled dimensions. Contractors shall verify and be responsible for all dimensions and conditions on the job and IBI Group shall be informed of any variations from the dimensions and conditions shown on the drawing. Shop drawings shall be submitted to IBI Group for approval before proceeding with fabrication.
COPYRIGHT © 2016 IBI GROUP

ISSUES

NO.	ISSUANCE	STATUS	DATE
1	60% CD SET		5/31/2016

SEAL
10759 REGISTERED ARCHITECT
CRAIG ROTHENBURGER
STATE OF WASHINGTON

SUB CONSULTANT

PRIME CONSULTANT
IBI Group
18401 VON KARMAN AVE, SUITE 110
tel 949.833.5588 fax 949.833.5511
ibigroup.com

PROJECT
The Village at Totem Lake - Building A
Kirkland, Washington

PROJECT NO:	Building A
DRAWN BY:	Author
CHKD' BY:	Checker
SCALE:	1/4" = 1'-0"
DATE:	5/31/2016

SHEET TITLE
ENLARGED SOUTH ELEVATION, PARTIAL PLAN & WALL SECTIONS

BLDG	SHEET NUMBER	ISSUE
A	A3011	

C:\Users\ethan.walker\Documents\ATW_Totem_Bldg_A_2016_ethan.walker.rvt
5/31/2016 5:58:19 PM

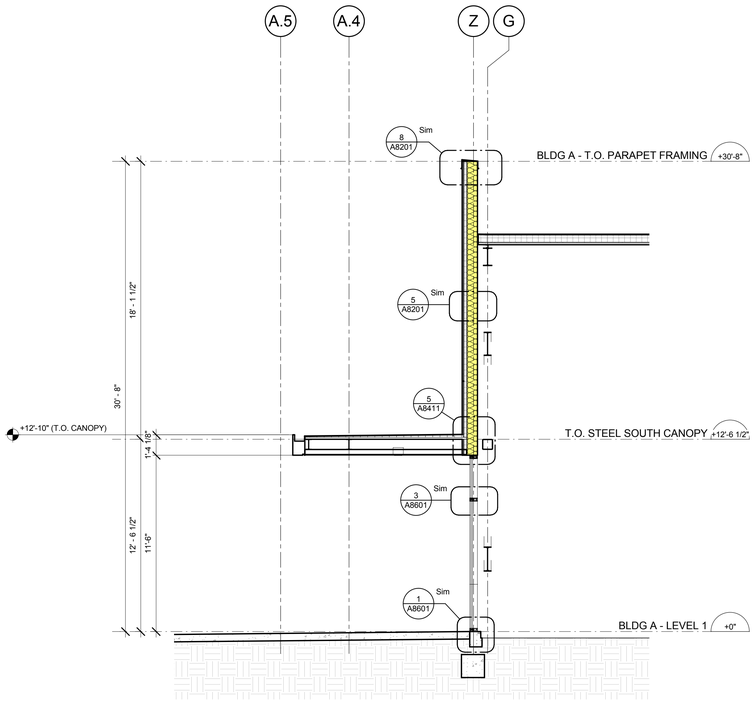

3 A3012 WALL SECTION
Scale: 1/4" = 1'-0"

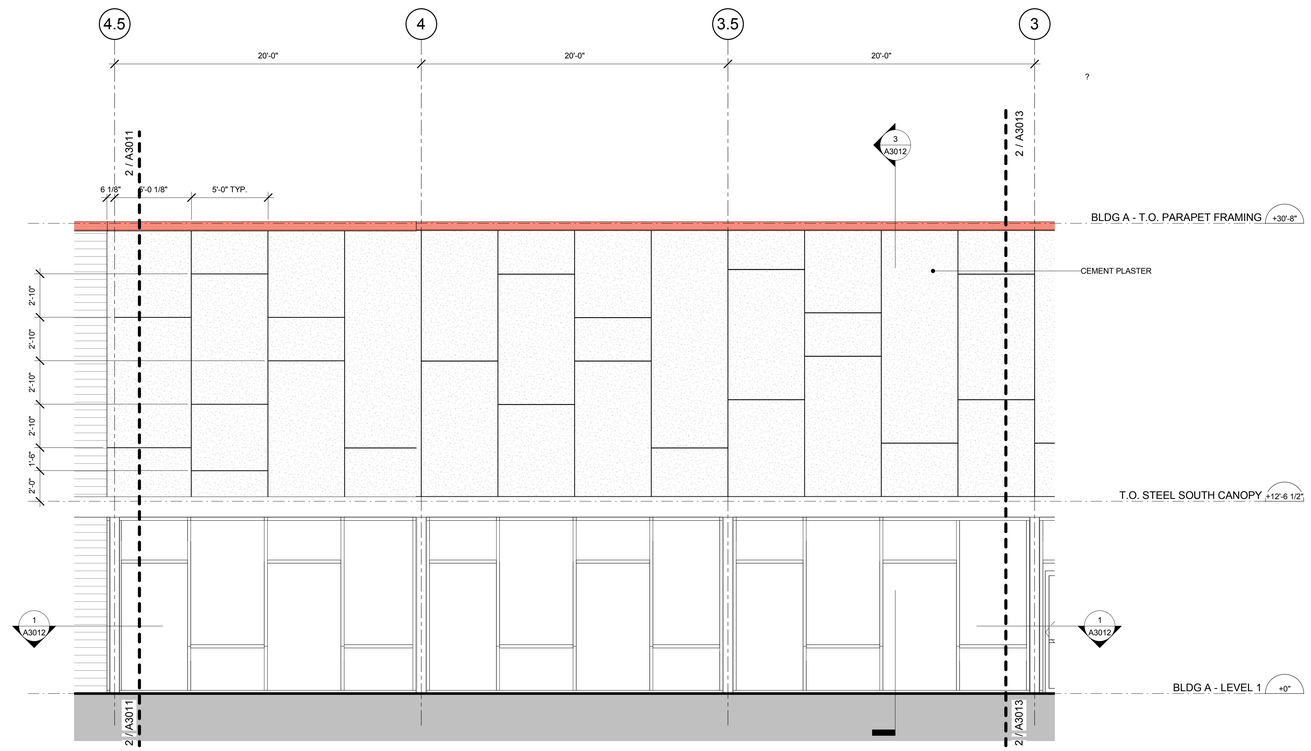

2 A3012 ENLARGED SOUTH ELEVATION
Scale: 1/4" = 1'-0"

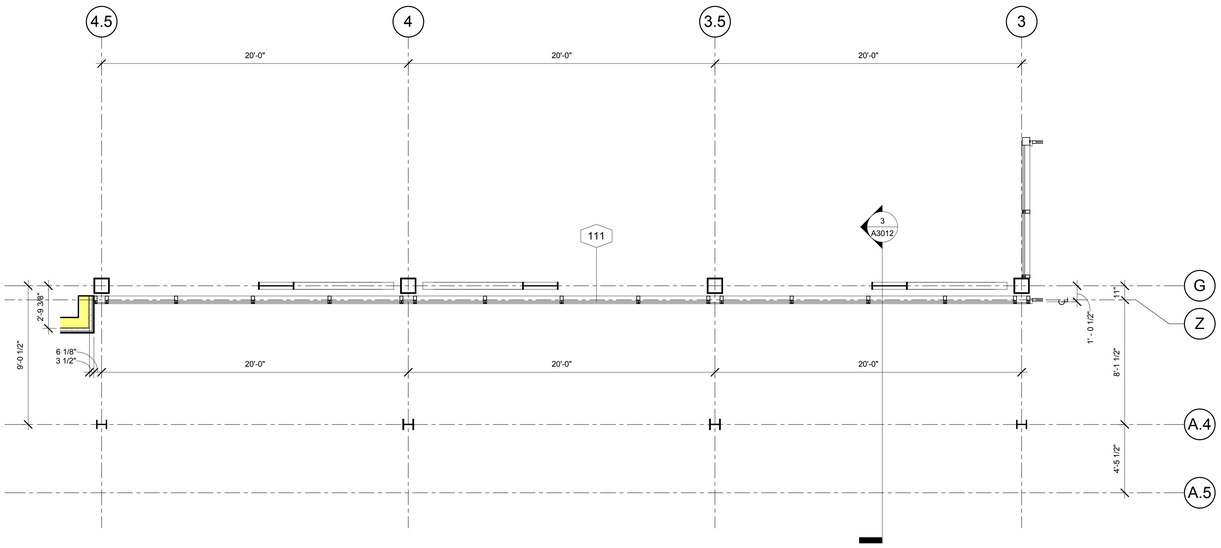

1 A3012 PARTIAL LEVEL 1 PLAN - ENTRY
Scale: 1/4" = 1'-0"

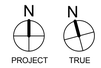

CLIENT

CENTERCAL PROPERTIES, LLC

COPYRIGHT:

Any reproduction or distribution for any purpose other than authorized by IBI Group is forbidden. Written dimensions shall have precedence over scaled dimensions. Contractors shall verify and be responsible for all dimensions and conditions on the job and IBI Group shall be informed of any variations from the dimensions and conditions shown on the drawing. Shop drawings shall be submitted to IBI Group for approval before proceeding with fabrication.

COPYRIGHT © 2016 IBI GROUP

ISSUES

NO.	ISSUANCE	STATUS	DATE
1	60% CD SET		5/31/2016

SEAL

10759 REGISTERED ARCHITECT
CRAIG ROTHENBURGER
STATE OF WASHINGTON

SUB CONSULTANT

PRIME CONSULTANT

IBI Group
18401 VON KARMAN AVE, SUITE 110
tel 949.833.5588 fax 949.833.5511
ibigroup.com

PROJECT
The Village at Totem Lake - Building A
Kirkland, Washington

PROJECT NO:	Building A
DRAWN BY:	Author
CHKD' BY:	Checker
SCALE:	1/4" = 1'-0"
DATE:	5/31/2016

SHEET TITLE
ENLARGED SOUTH ELEVATION, PARTIAL PLAN & WALL SECTIONS

BLDG	SHEET NUMBER	ISSUE
A	A3012	

C:\Users\ethan.walker\Documents\ATW_Totem_Bldg_A_2016_ethan.walker.rvt
5/31/2016 5:58:20 PM

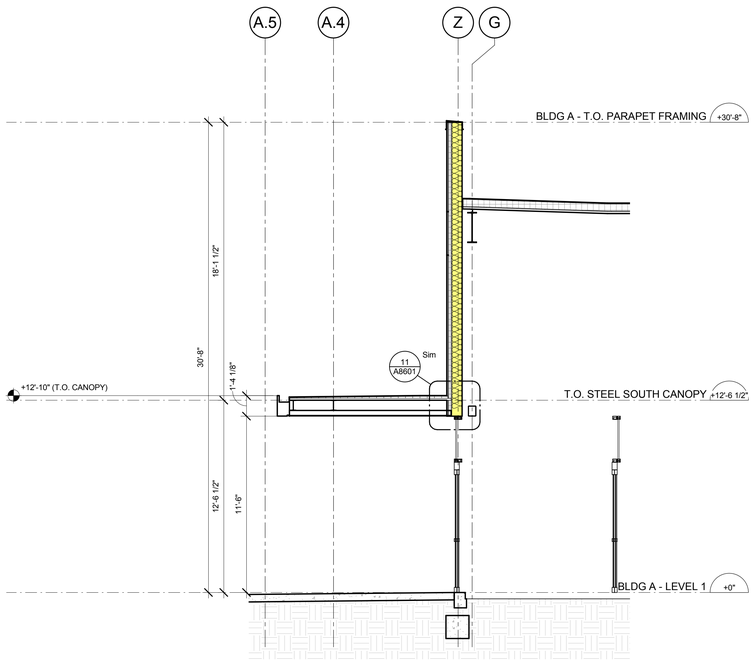

4 / A3013 WALL SECTION - STOREFRONT AT SOUTHEAST CORNER
Scale: 1/4" = 1'-0"

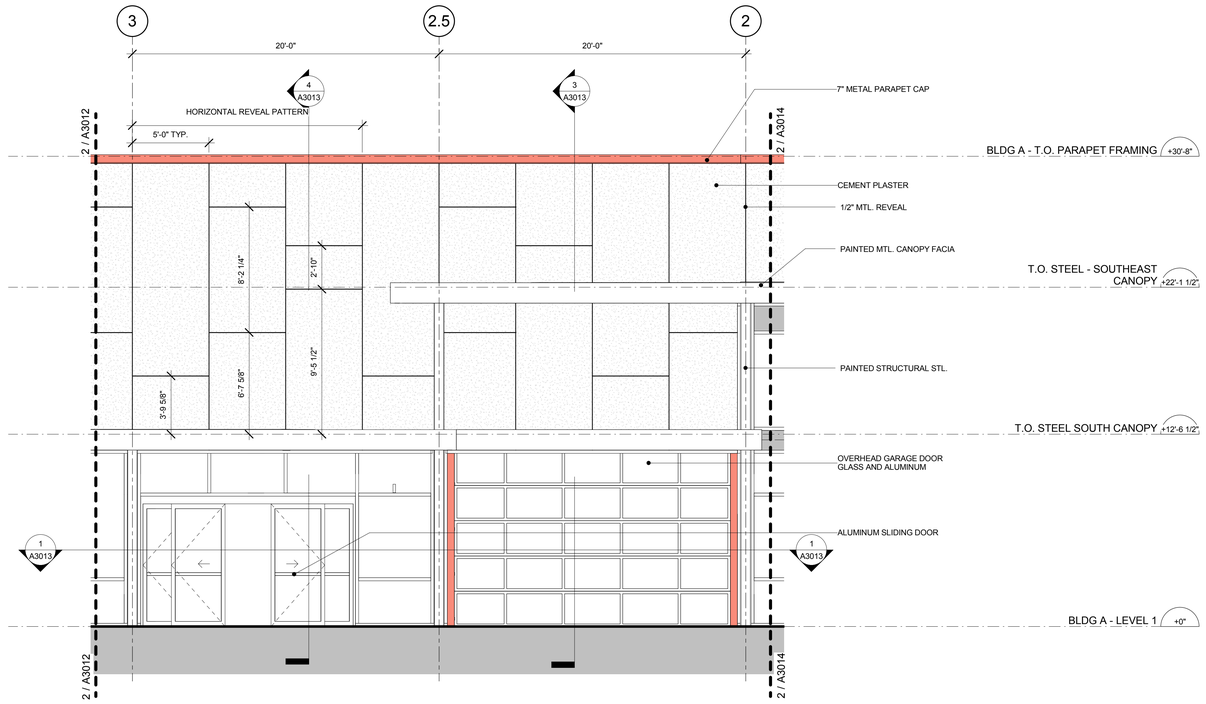

2 / A3013 ENLARGED ELEVATION - SOUTHEAST ENTRY
Scale: 1/4" = 1'-0"

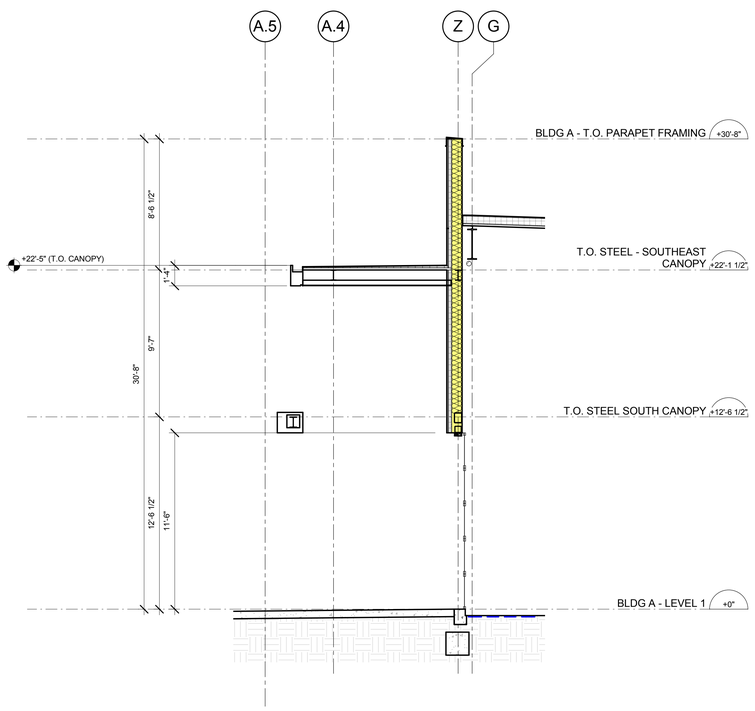

3 / A3013 WALL SECTION - OVERHEAD DOOR AT SOUTHEAST CORNER
Scale: 1/4" = 1'-0"

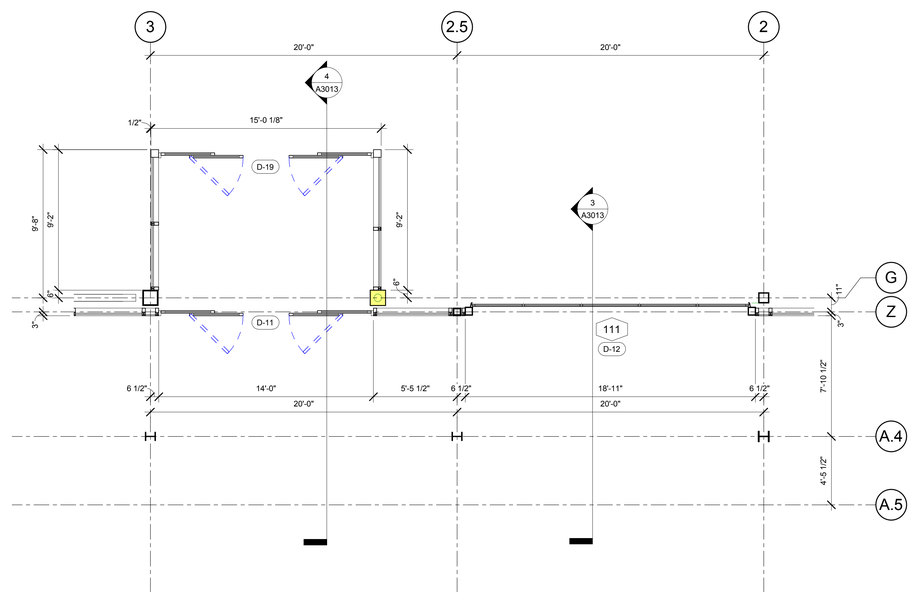

1 / A3013 PARTIAL PLAN - GL 3 THRU 2
Scale: 1/4" = 1'-0"

N PROJECT
N TRUE

CLIENT

CENTERCAL PROPERTIES, LLC

COPYRIGHT:

Any reproduction or distribution for any purpose other than authorized by IBI Group is forbidden. Written dimensions shall have precedence over scaled dimensions. Contractors shall verify and be responsible for all dimensions and conditions on the job, and report any errors or omissions to the architect then the dimensions and conditions shown on the drawing. Shop drawings shall be submitted to IBI Group for approval before proceeding with fabrication.

COPYRIGHT © 2016 IBI GROUP

ISSUES

NO.	ISSUANCE	STATUS	DATE
1	60% CD SET		5/31/2016

SEAL

10759 REGISTERED ARCHITECT
CRAIG ROTHENBURGER
STATE OF WASHINGTON

SUB CONSULTANT

PRIME CONSULTANT

IBI Group
18401 VON KARMAN AVE, SUITE 110
tel 949.833.5588 fax 949.833.5511
ibigroup.com

PROJECT
The Village at Totem Lake - Building A
Kirkland, Washington

PROJECT NO:	Building A
DRAWN BY:	Author
CHKD' BY:	Checker
SCALE:	1/4" = 1'-0"
DATE:	5/31/2016

SHEET TITLE
ENLARGED SOUTH ELEVATION, PARTIAL PLAN & WALL SECTIONS

BLDG	SHEET NUMBER	ISSUE
A	A3013	

C:\Users\nathan.walker\Documents\ATW_Totem_Bldg_A_2016_nthan.walker.rvt

5/31/2016 5:08:20 PM

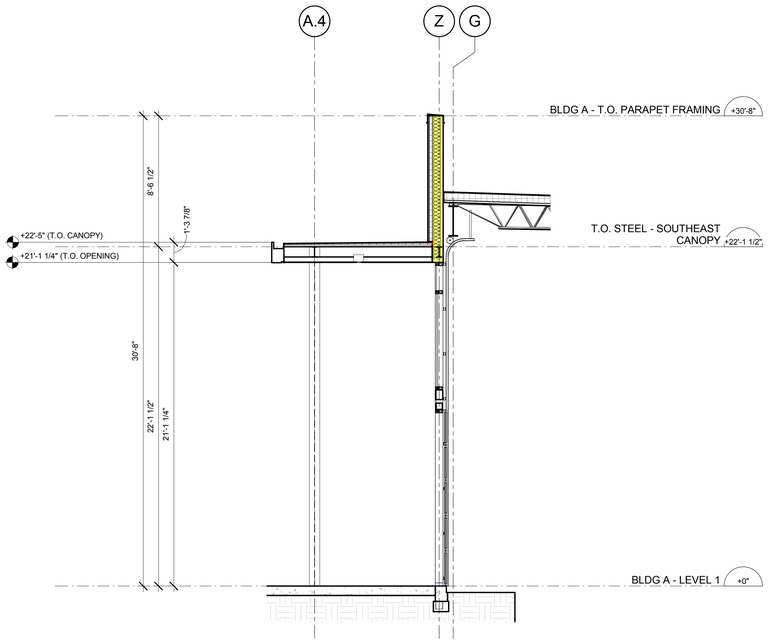

3 / A3014 WALL SECTION - OVERHEAD DOOR
Scale: 1/4" = 1'-0"

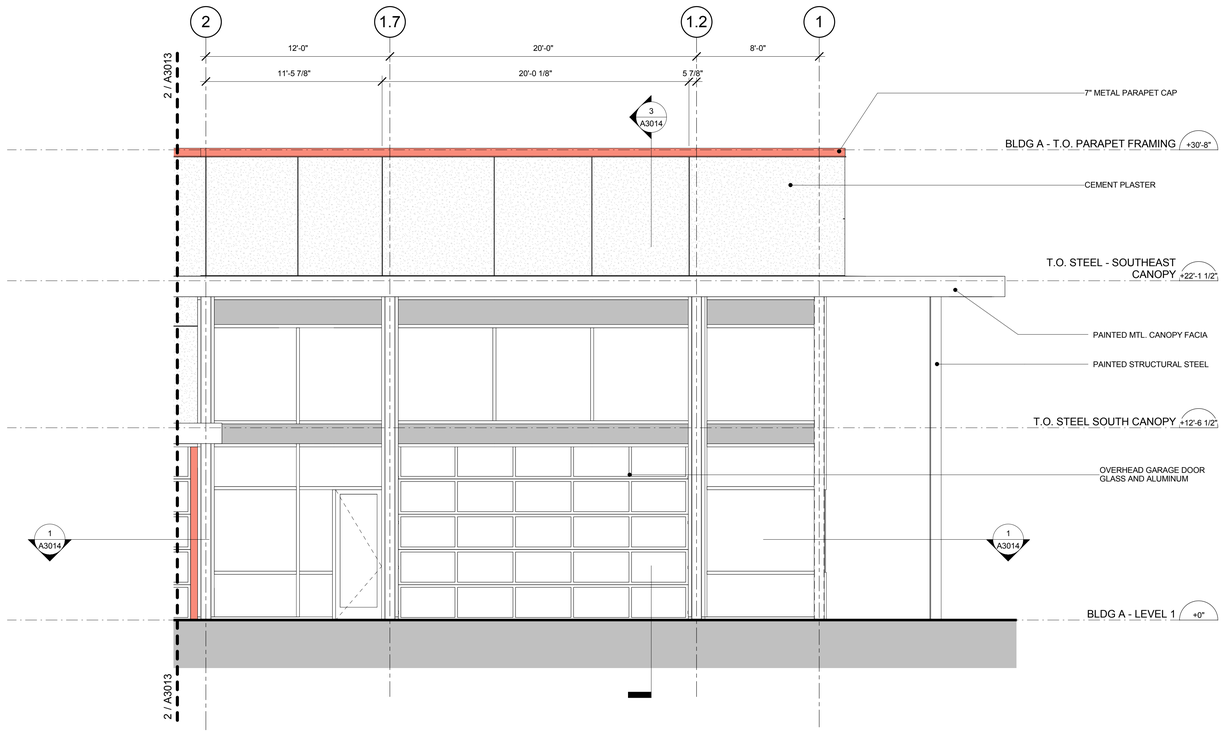

2 / A3014 ENLARGED ELEVATION - SOUTHEAST CORNER
Scale: 1/4" = 1'-0"

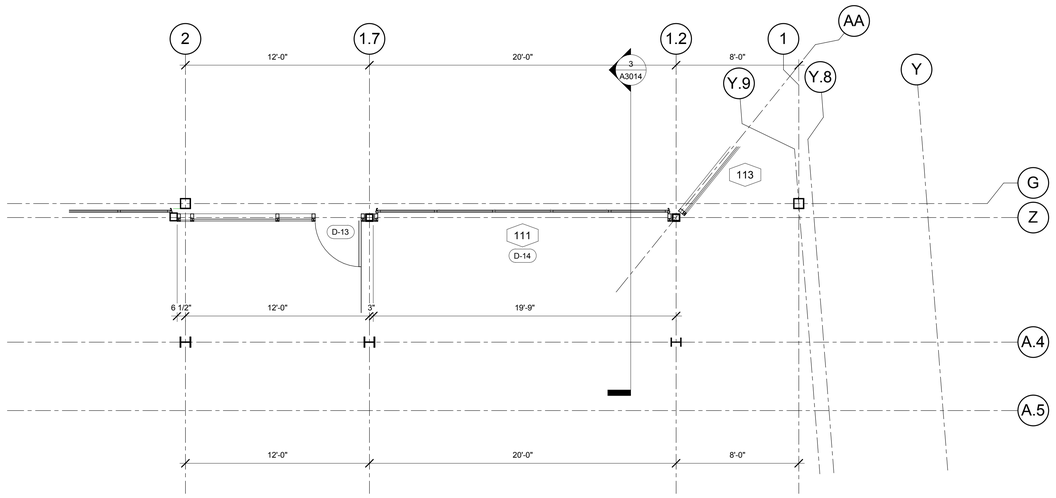

1 / A3014 PARTIAL PLAN - GL 2 THRU 1
Scale: 1/4" = 1'-0"

N PROJECT
N TRUE

CLIENT
CENTERCAL PROPERTIES, LLC

COPYRIGHT:
Any reproduction or distribution for any purpose other than authorized by IBI Group is forbidden. Written dimensions shall have precedence over scaled dimensions. Contractors shall verify and be responsible for all dimensions and conditions on the job, and IBI Group must be informed of any variations from the dimensions and conditions shown on the drawing. Shop drawings shall be submitted to IBI Group for approval before proceeding with fabrication.
COPYRIGHT © 2016 IBI GROUP

ISSUES

NO.	ISSUANCE	STATUS	DATE
1	60% CD SET		5/31/2016

SEAL
10759 REGISTERED ARCHITECT
CRAIG ROTHENBURGER
STATE OF WASHINGTON

SUB CONSULTANT

PRIME CONSULTANT
IBI Group
18401 VON KARMAN AVE, SUITE 110
tel 949.833.5588 fax 949.833.5511
ibigroup.com

PROJECT
The Village at Totem Lake - Building A
Kirkland, Washington

PROJECT NO:	Building A
DRAWN BY:	Author
CHKD' BY:	Checker
SCALE:	1/4" = 1'-0"
DATE:	5/31/2016

SHEET TITLE
ENLARGED SOUTH ELEVATION, PARTIAL PLAN & WALL SECTIONS

BLDG	SHEET NUMBER	ISSUE
A	A3014	

C:\Users\nathan.walker\Documents\ATW_Totem_Bldg_A_2016_nthan.walker.rvt
5/31/2016 5:08:21 PM

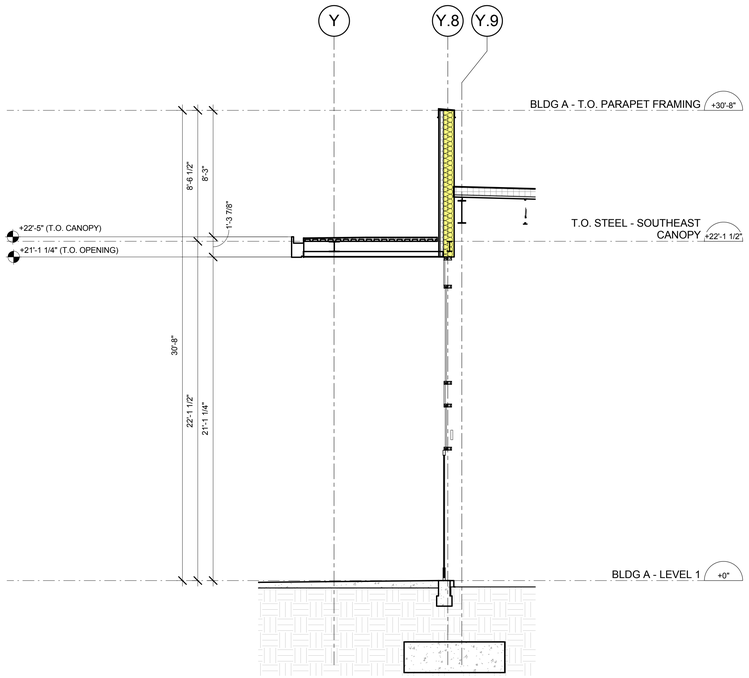

3 A3020 WALL SECTION F
Scale: 1/4" = 1'-0"

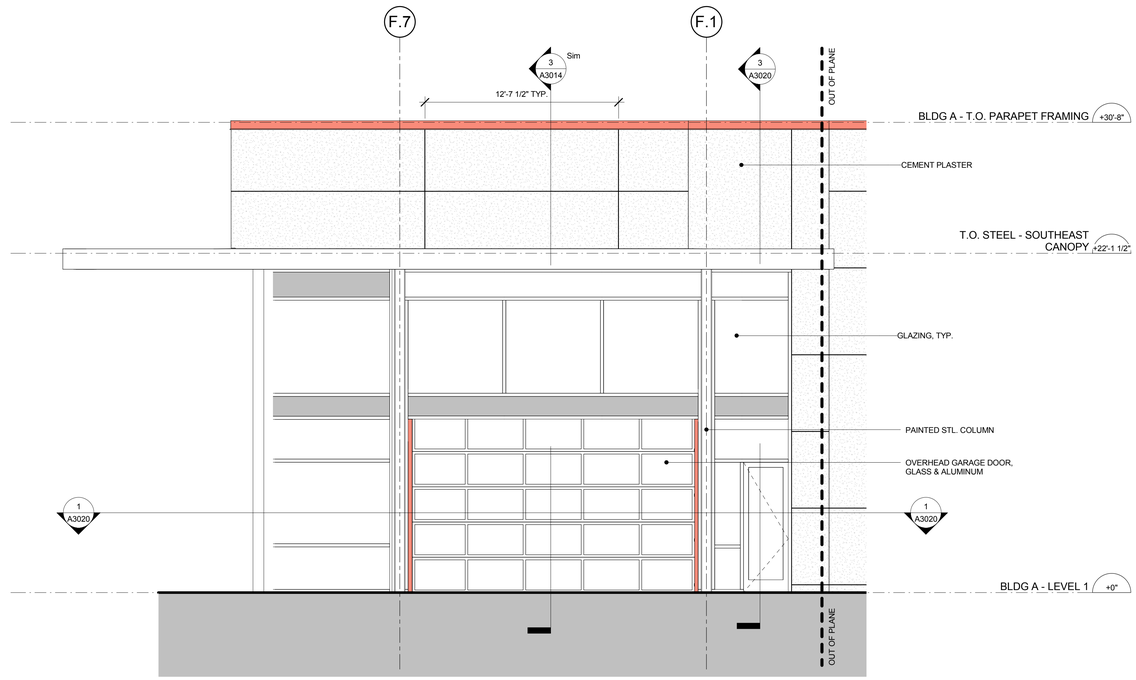

2 A3020 ENLARGED ELEVATION - SOUTHEAST CORNER AT CAFE
Scale: 1/4" = 1'-0"

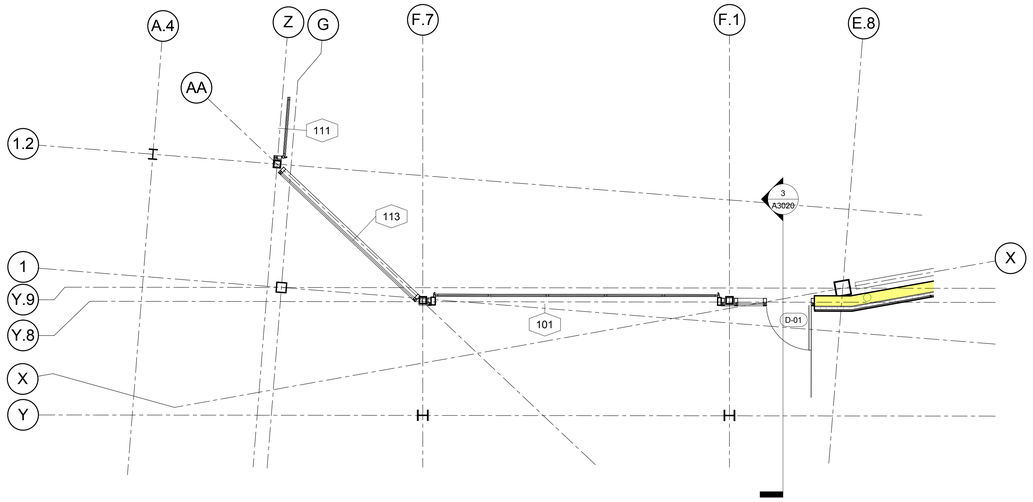

1 A3020 PARTIAL PLAN - SOUTHEAST CORNER
Scale: 1/4" = 1'-0"

CLIENT

CENTERCAL PROPERTIES, LLC

COPYRIGHT:

Any reproduction or distribution for any purpose other than authorized by IBI Group is forbidden. Written dimensions shall have precedence over scaled dimensions. Contractors shall verify and be responsible for all dimensions and conditions on the job and IBI Group shall be informed of any variations from the dimensions and conditions shown on the drawing. Shop drawings shall be submitted to IBI Group for approval before proceeding with fabrication.

COPYRIGHT © 2016 IBI GROUP

ISSUES

NO.	ISSUANCE	STATUS	DATE
1	60% CD SET		5/31/2016

SEAL

10759 REGISTERED ARCHITECT
CRAIG ROTHENBURGER
STATE OF WASHINGTON

SUB CONSULTANT

PRIME CONSULTANT

IBI Group
18401 VON KARMAN AVE, SUITE 110
tel 949.833.5588 fax 949.833.5511
ibigroup.com

PROJECT
The Village at Totem Lake - Building A
Kirkland, Washington

PROJECT NO:	Building A
DRAWN BY:	Author
CHKD' BY:	Checker
SCALE:	1/4" = 1'-0"
DATE:	5/31/2016

SHEET TITLE
ENLARGED EAST ELEVATION, PARTIAL PLAN & WALL SECTIONS

BLDG	SHEET NUMBER	ISSUE
A	A3020	

C:\Users\ethan.walker\Documents\ATW_Totem_Bldg_A_2016_ethan.walker.rvt
5/31/2016 5:58:21 PM

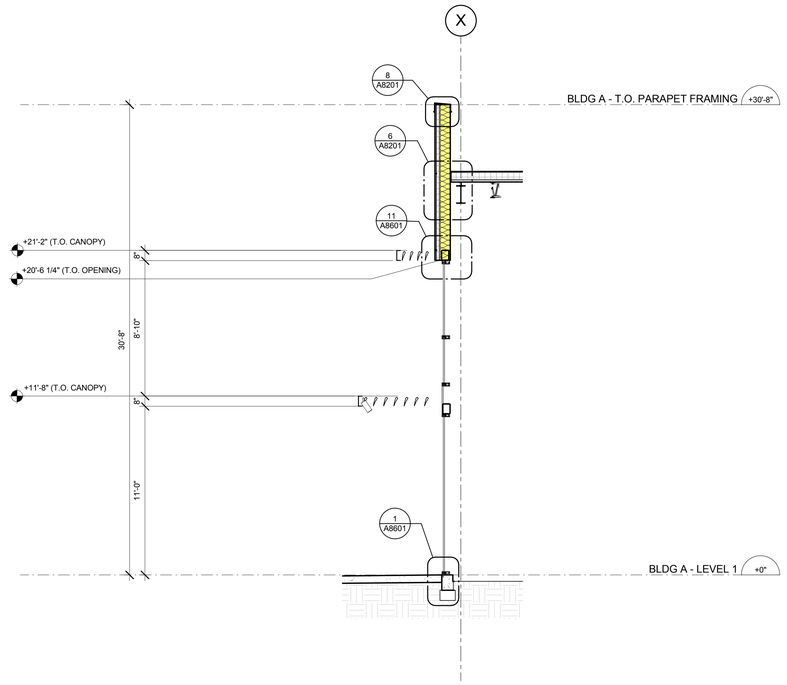

4 A3021 WALL SECTION K
Scale: 1/4" = 1'-0"

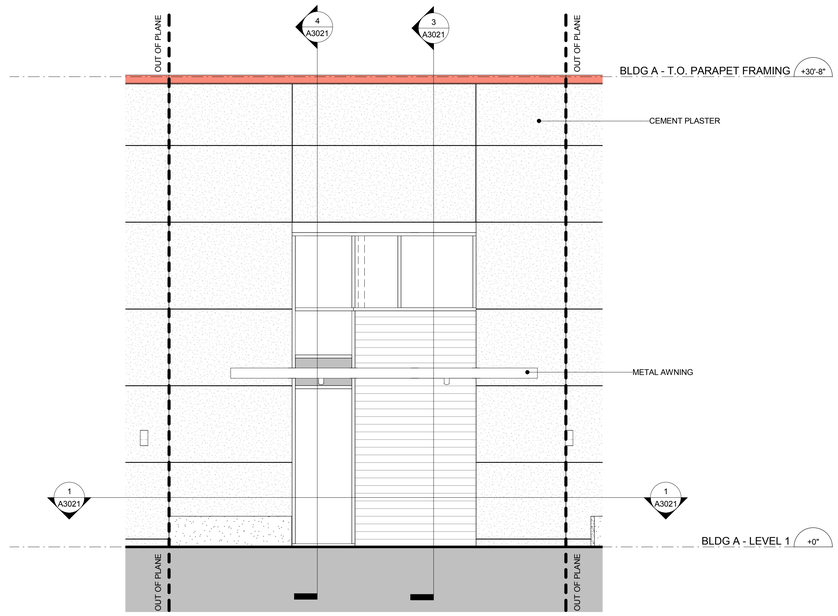

2 A3021 ENLARGED ELEVATION - EAST, TYP.
Scale: 1/4" = 1'-0"

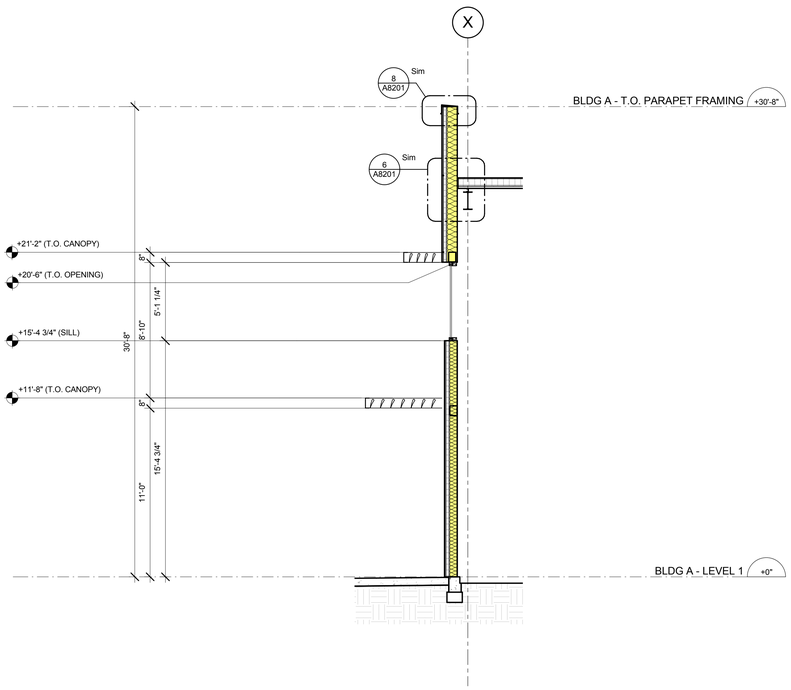

3 A3021 WALL SECTION H
Scale: 1/4" = 1'-0"

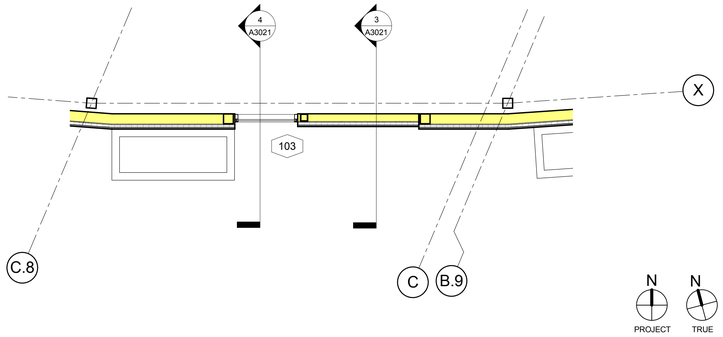

1 A3021 PARTIAL PLAN - EAST, TYP.
Scale: 1/4" = 1'-0"

CLIENT

CENTERCAL PROPERTIES, LLC

COPYRIGHT:

Any reproduction or distribution for any purpose other than authorized by IBI Group is forbidden. Written dimensions shall have precedence over scaled dimensions. Contractors shall verify and be responsible for all dimensions and conditions on the job and IBI Group shall be informed of any variations from the dimensions and conditions shown on the drawing. Shop drawings shall be submitted to IBI Group for approval before proceeding with fabrication.

COPYRIGHT © 2016 IBI GROUP

ISSUES

NO.	ISSUANCE	STATUS	DATE
1	60% CD SET		5/31/2016

SEAL

10759 REGISTERED ARCHITECT
CRAIG ROTHENBURGER
STATE OF WASHINGTON

SUB CONSULTANT

PRIME CONSULTANT

IBI Group
18401 VON KARMAN AVE, SUITE 110
tel 949.833.5588 fax 949.833.5511
ibigroup.com

PROJECT
The Village at Totem Lake - Building A
Kirkland, Washington

PROJECT NO:	Building A
DRAWN BY:	Author
CHKD' BY:	Checker
SCALE:	1/4" = 1'-0"
DATE:	5/31/2016

SHEET TITLE
ENLARGED EAST ELEVATION, PARTIAL PLAN & WALL SECTIONS

BLDG	SHEET NUMBER	ISSUE
A	A3021	

C:\Users\ethan.walker\Documents\ATW_Totem_Bldg A_2016_ethan.walker.rvt
5/31/2016 5:58:22 PM

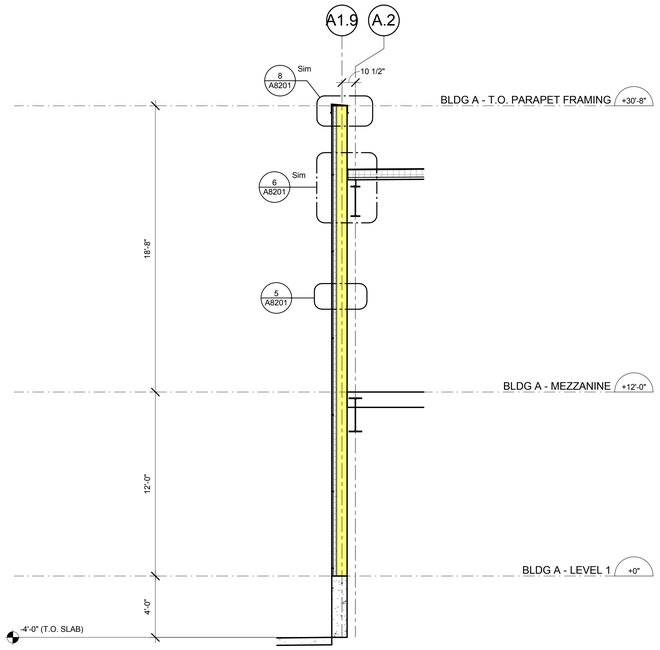

3 A3030 WALL SECTION - NORTH, TYP.
Scale: 1/4" = 1'-0"

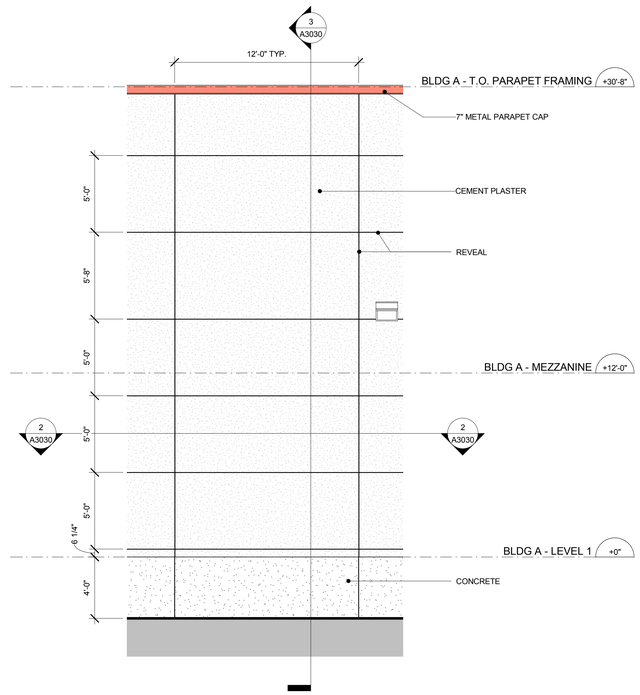

1 A3030 ENLARGED ELEVATION - NORTH, TYP.
Scale: 1/4" = 1'-0"

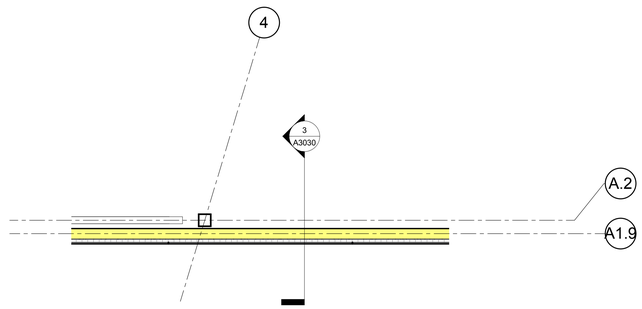

2 A3030 PARTIAL PLAN - NORTH, TYP.
Scale: 1/4" = 1'-0"

CLIENT

CENTERCAL PROPERTIES, LLC

COPYRIGHT:

Any reproduction or distribution for any purpose other than authorized by IBI Group is forbidden. Written dimensions shall have precedence over scaled dimensions. Contractors shall verify and be responsible for all dimensions and conditions on the job, and IBI Group must be informed of any variations from the dimensions and conditions shown on the drawing. Shop drawings shall be submitted to IBI Group for approval before proceeding with fabrication.

COPYRIGHT © 2016 IBI GROUP

ISSUES

NO.	ISSUANCE	STATUS	DATE
1	60% CD SET		5/31/2016

SEAL

10759 REGISTERED ARCHITECT
CRAIG ROTHENBURGER
STATE OF WASHINGTON

SUB CONSULTANT

PRIME CONSULTANT

IBI Group
18401 VON KARMAN AVE, SUITE 110
tel 949.833.5588 fax 949.833.5511
ibigroup.com

PROJECT
The Village at Totem Lake - Building A
Kirkland, Washington

PROJECT NO:	Building A
DRAWN BY:	Author
CHKD' BY:	Checker
SCALE:	1/4" = 1'-0"
DATE:	5/31/2016

SHEET TITLE
ENLARGED NORTH ELEVATION, PARTIAL PLAN & WALL SECTION

BLDG	SHEET NUMBER	ISSUE
A	A3030	

5/31/2016 5:09:23 PM C:\Users\ethan.walker\Documents\ATW_Totem_Bldg\A_2016_ethan.walker.rvt

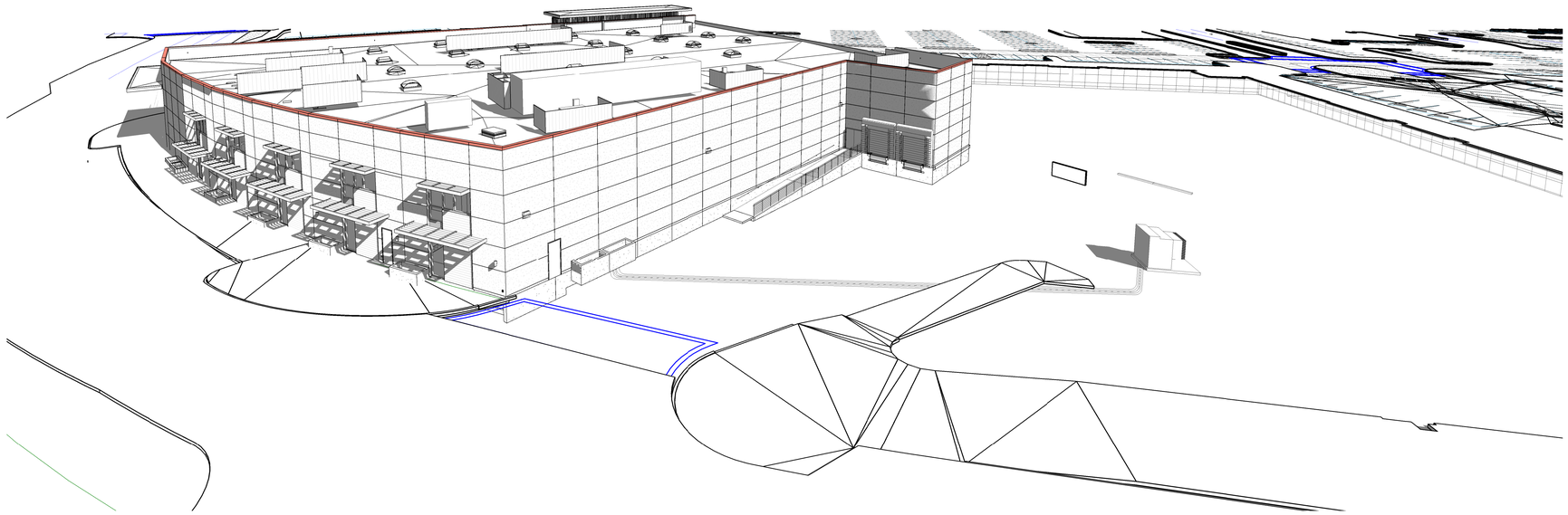

2 A3100 ELEVATED VIEW FROM UPPER MALL
Scale:

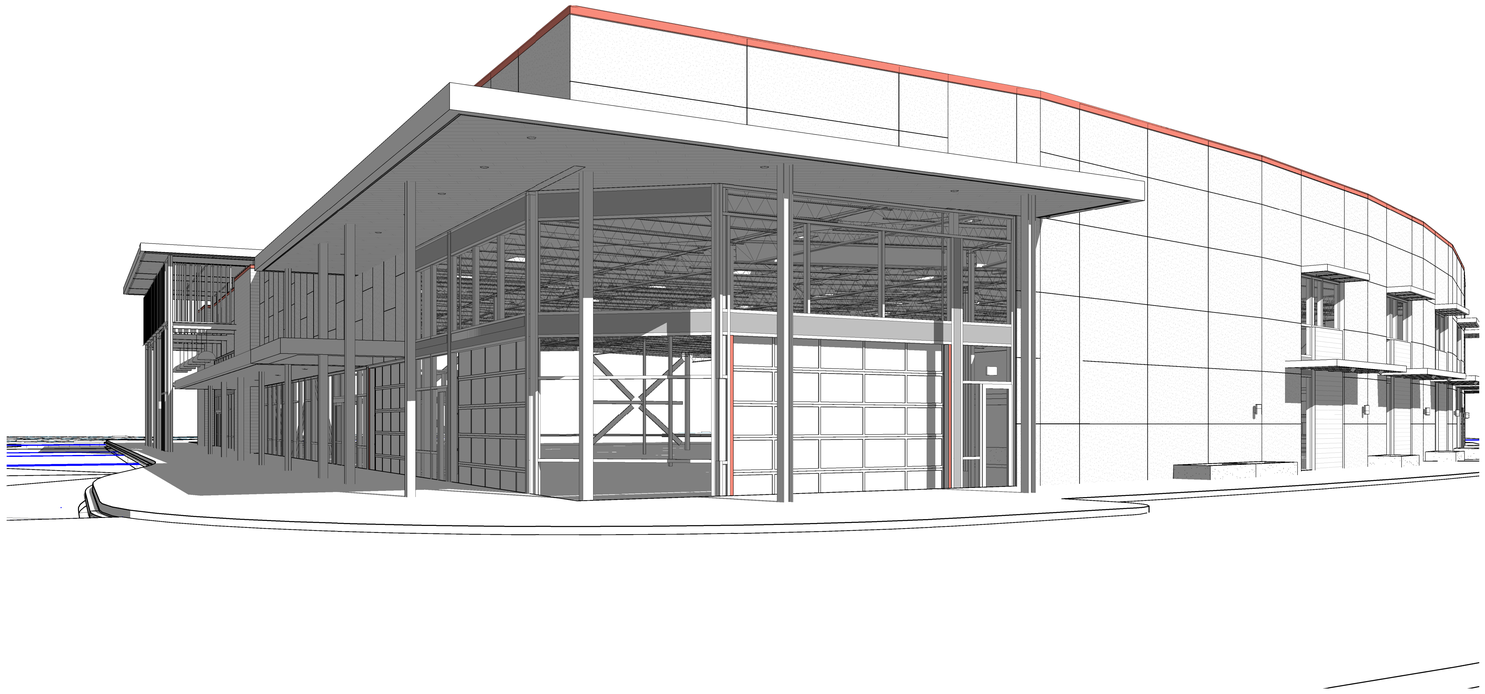

1 A3100 STREET VIEW FROM SOUTH CORNER
Scale:

CLIENT

CENTERCAL PROPERTIES, LLC

COPYRIGHT:

Any reproduction or distribution for any purpose other than authorized by IBI Group is forbidden. Written dimensions shall have precedence over scaled dimensions. Contractors shall verify and be responsible for all dimensions and conditions on the job and IBI Group shall be informed of any variations from the dimensions and conditions shown on the drawing. Shop drawings shall be submitted to IBI Group for approval before proceeding with fabrication.

COPYRIGHT © 2016 IBI GROUP

ISSUES

NO.	ISSUANCE	STATUS	DATE
1	60% CD SET		5/31/2016

SEAL

10759 REGISTERED ARCHITECT
CRAIG ROTHENBURGER
STATE OF WASHINGTON

SUB CONSULTANT

PRIME CONSULTANT

IBI Group
18401 VON KARMAN AVE, SUITE 110
tel 949.833.5588 fax 949.833.5511
ibigroup.com

PROJECT
The Village at Totem Lake - Building A
Kirkland, Washington

PROJECT NO:	Building A
DRAWN BY:	Author
CHKD' BY:	Checker
SCALE:	
DATE:	5/31/2016

SHEET TITLE
3D VIEWS

BLDG	SHEET NUMBER	ISSUE
A	A3100	

C:\Users\ethan.walker\Documents\ATW_Totem_Bldg A_2016_ethan.walker.rvt
5/31/2016 5:58:34 PM

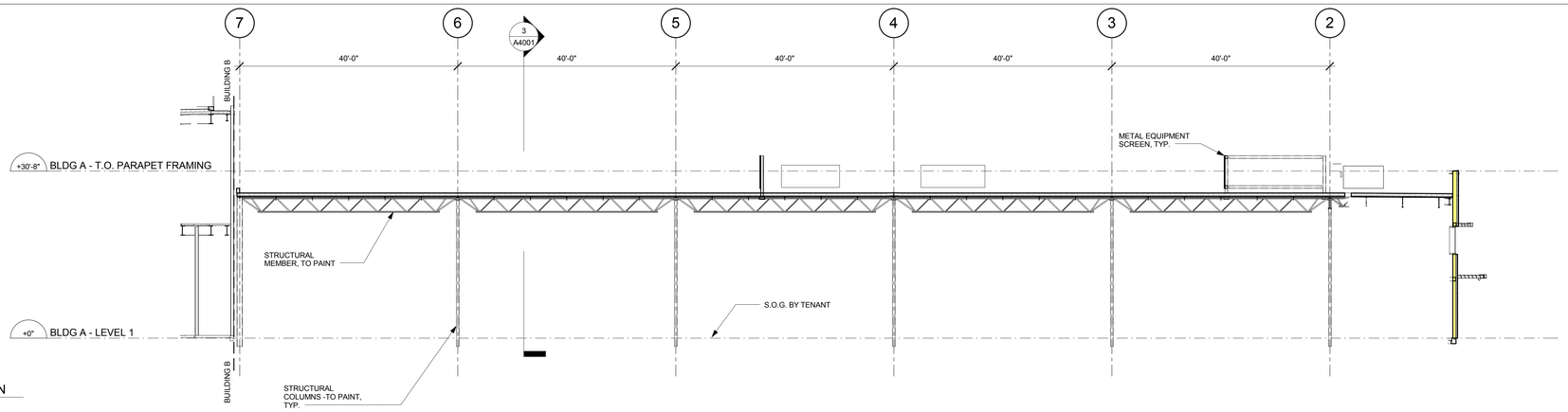

4 A4001 LONGITUDINAL MAIN BUILDING SECTION
Scale: 3/32" = 1'-0"

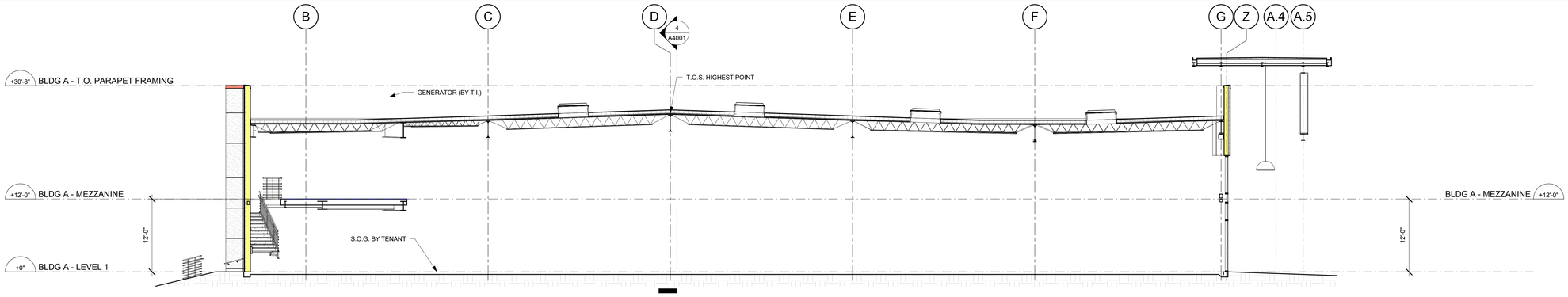

3 A4001 TRANSVERSE BUILDING SECTION
Scale: 1/8" = 1'-0"

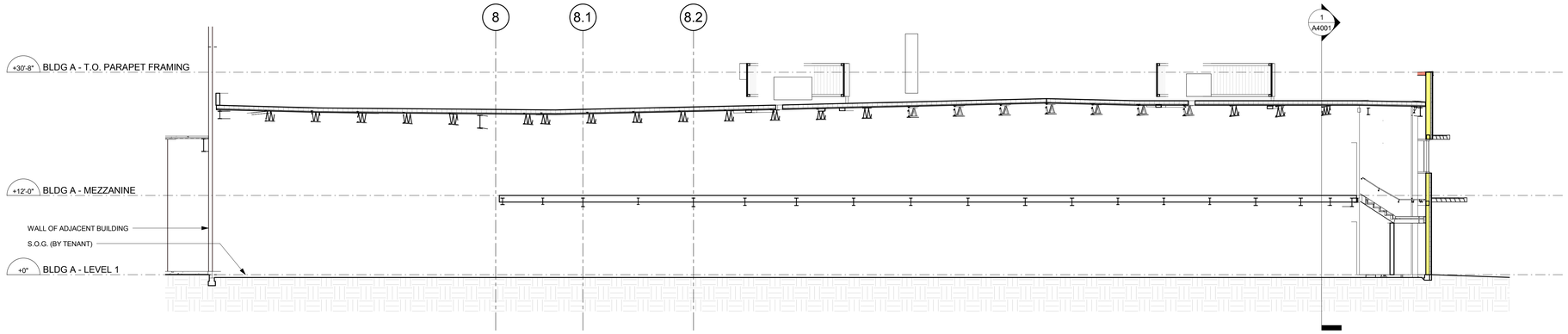

2 A4001 LONGITUDINTAL BUILDING SECTION @ MEZZANINE
Scale: 1/8" = 1'-0"

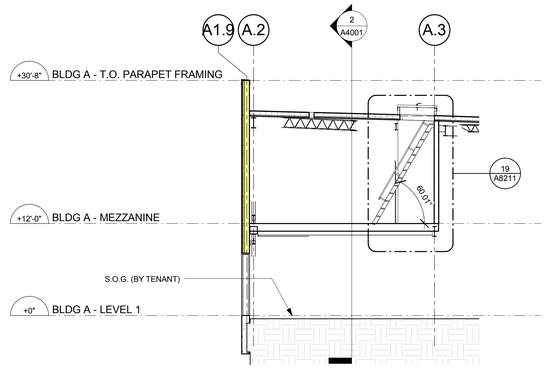

1 A4001 TRANSVERSE BUILDING SECTION @ MEZZANINE
Scale: 1/8" = 1'-0"

CLIENT

CENTERCAL PROPERTIES, LLC

COPYRIGHT:

Any reproduction or distribution for any purpose other than authorized by IBI Group is forbidden. Written dimensions shall have precedence over scaled dimensions. Contractors shall verify and be responsible for all dimensions and conditions on the job, and IBI Group must be informed of any variations from the dimensions and conditions shown on the drawing. Shop drawings shall be submitted to IBI Group for approval before proceeding with fabrication.

COPYRIGHT © 2016 IBI GROUP

ISSUES

NO.	ISSUANCE	STATUS	DATE
1	60% CD SET		5/31/2016

SEAL

10759 REGISTERED ARCHITECT
CRAIG ROTHENBURGER
STATE OF WASHINGTON

SUB CONSULTANT

PRIME CONSULTANT

IBI Group
18401 VON KARMAN AVE, SUITE 110
tel 949.833.5588 fax 949.833.5511
ibigroup.com

PROJECT
The Village at Totem Lake - Building A
Kirkland, Washington

PROJECT NO:	Building A
DRAWN BY:	Author
CHKD' BY:	Checker
SCALE:	As indicated
DATE:	5/31/2016

SHEET TITLE
BUILDING SECTIONS

BLDG	SHEET NUMBER	ISSUE
A	A4001	

C:\Users\ethan.walker\Documents\ATW_Totem_Bldg_A_2016_ethan.walker.rvt

5/31/2016 5:08:36 PM

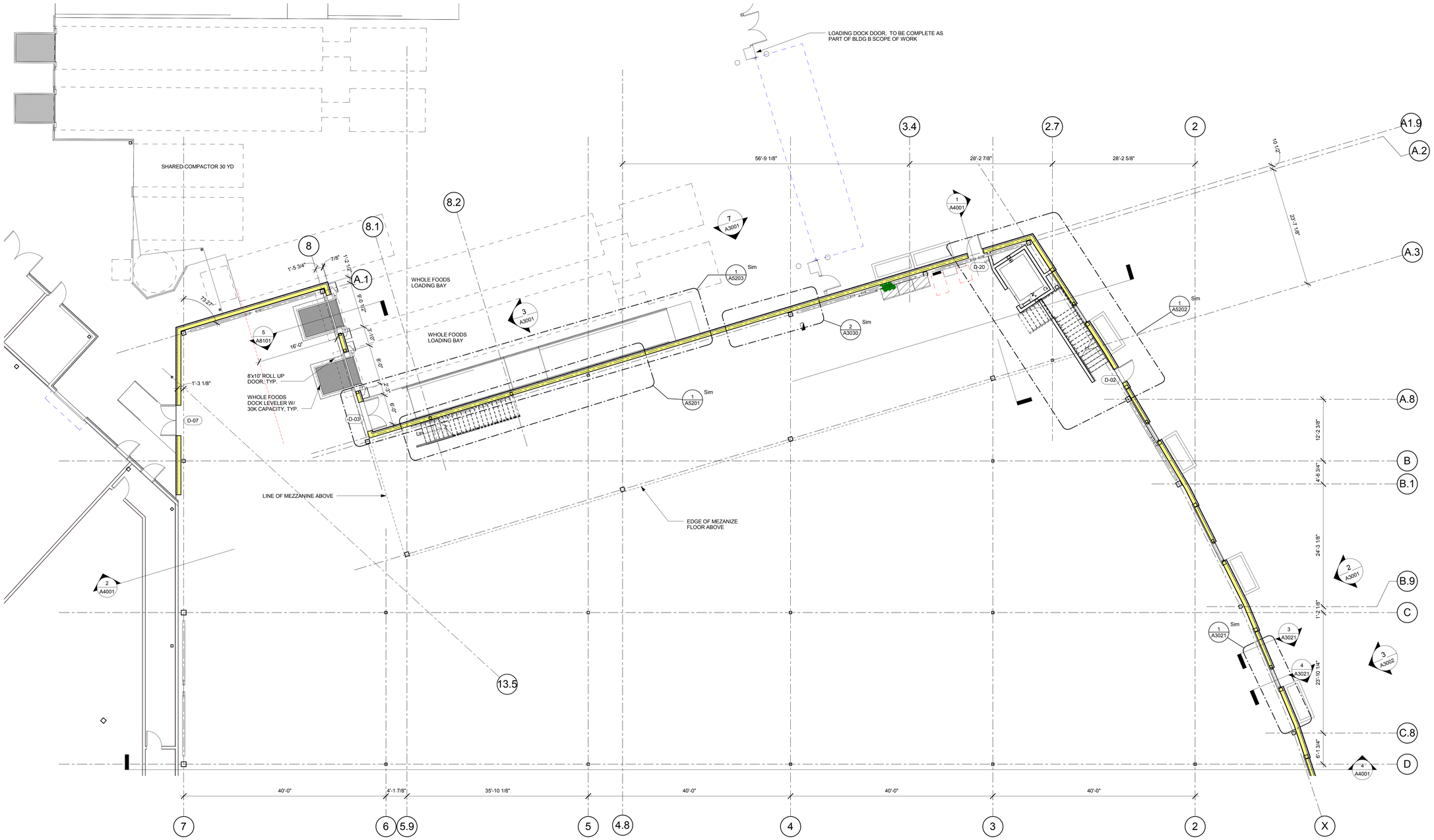

1 A5001 ENLARGED LOADING DOCK PLAN
Scale: 1/8" = 1'-0"

CLIENT

CENTERCAL PROPERTIES, LLC

COPYRIGHT:

Any reproduction or distribution for any purpose other than authorized by IBI Group is forbidden. Written dimensions shall have precedence over scaled dimensions. Contractors shall verify and be responsible for all dimensions and conditions on the job and IBI Group shall be informed of any variations from the dimensions and conditions shown on the drawing. Shop drawings shall be submitted to IBI Group for approval before proceeding with fabrication.

COPYRIGHT © 2016 IBI GROUP

ISSUES

NO.	ISSUANCE	STATUS	DATE
1	60% CD SET		5/31/2016

SEAL

10759 REGISTERED ARCHITECT
CRAIG ROTHENBURGER
STATE OF WASHINGTON

SUB CONSULTANT

PRIME CONSULTANT

IBI Group
18401 VON KARMAN AVE, SUITE 110
tel 949.833.5588 fax 949.833.5511
ibigroup.com

PROJECT
The Village at Totem Lake - Building A
Kirkland, Washington

PROJECT NO:	Building A
DRAWN BY:	Author
CHKD' BY:	Checker
SCALE:	1/8" = 1'-0"
DATE:	5/31/2016

SHEET TITLE
ENLARGED FLOOR PLANS

BLDG	SHEET NUMBER	ISSUE
A	A5001	

N PROJECT N TRUE

C:\Users\ethan.walker\Documents\ATW_Totem_Bldg\A_A_2016_ethan.walker.rvt
5/31/2016 5:58:37 PM

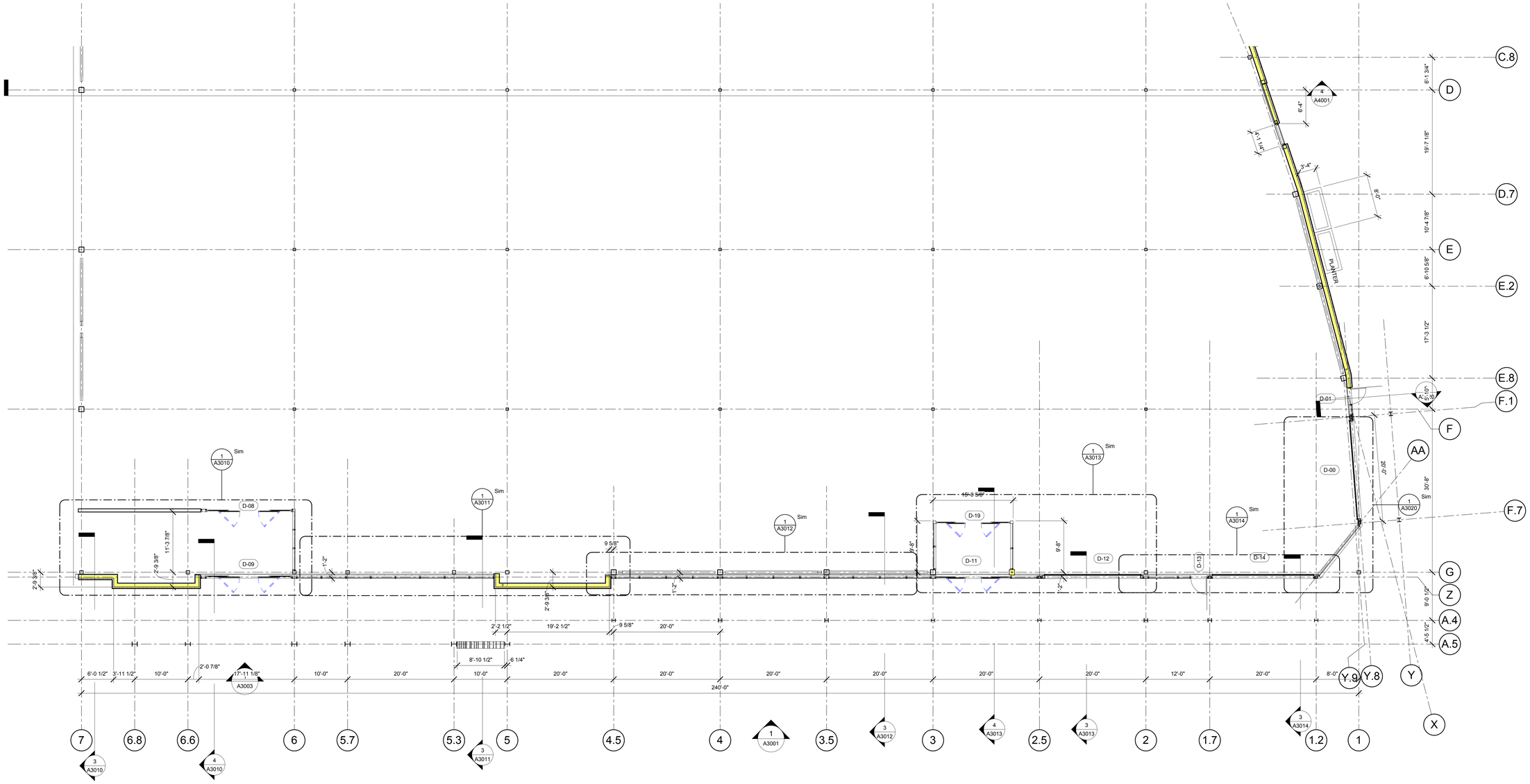

1 A5002 ENLARGED VESTIBULE PLAN

Scale: 1/8" = 1'-0"

5/31/2016 5:58:37 PM C:\Users\ethan.walker\Documents\ATV_Totem_Bldgs_A_2016_ethan.walker.rvt

CLIENT

CENTERCAL PROPERTIES, LLC

COPYRIGHT:

Any reproduction or distribution for any purpose other than authorized by IBI Group is forbidden. Written dimensions shall have precedence over scaled dimensions. Contractors shall verify and be responsible for all dimensions and conditions on the job, and report any errors, omissions or conflicts in the dimensions and conditions shown on the drawing. Shop drawings shall be submitted to IBI Group for approval before proceeding with fabrication.

COPYRIGHT © 2016 IBI GROUP

ISSUES

NO.	ISSUANCE	STATUS	DATE
1	60% CD SET		5/31/2016

SEAL

10759 REGISTERED ARCHITECT

CRAIG ROTHENBURGER
STATE OF WASHINGTON

SUB CONSULTANT

PRIME CONSULTANT

IBI Group
18401 VON KARMAN AVE, SUITE 110
tel 949.833.5588 fax 949.833.5511
ibigroup.com

PROJECT

The Village at Totem Lake - Building A
Kirkland, Washington

PROJECT NO:	Building A
DRAWN BY:	Author
CHKD' BY:	Checker
SCALE:	1/8" = 1'-0"
DATE:	5/31/2016

SHEET TITLE

ENLARGED FLOOR PLANS

BLDG	SHEET NUMBER	ISSUE
A	A5002	

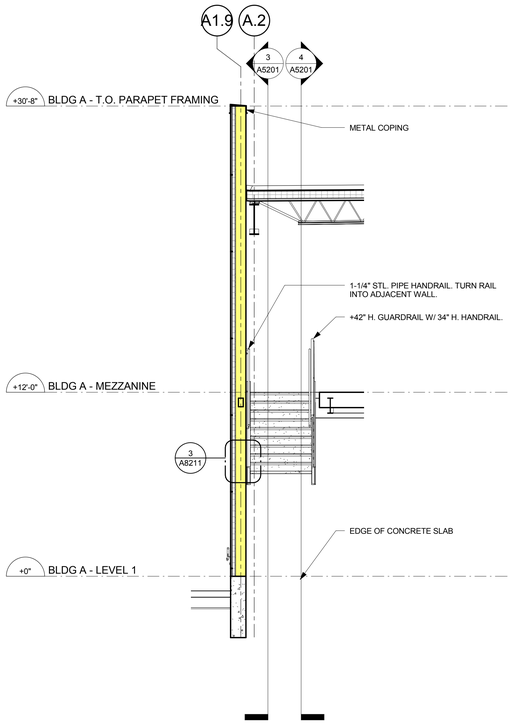

5 A5201 STAIR SECTION - NORTH - CROSS
Scale: 1/4" = 1'-0"

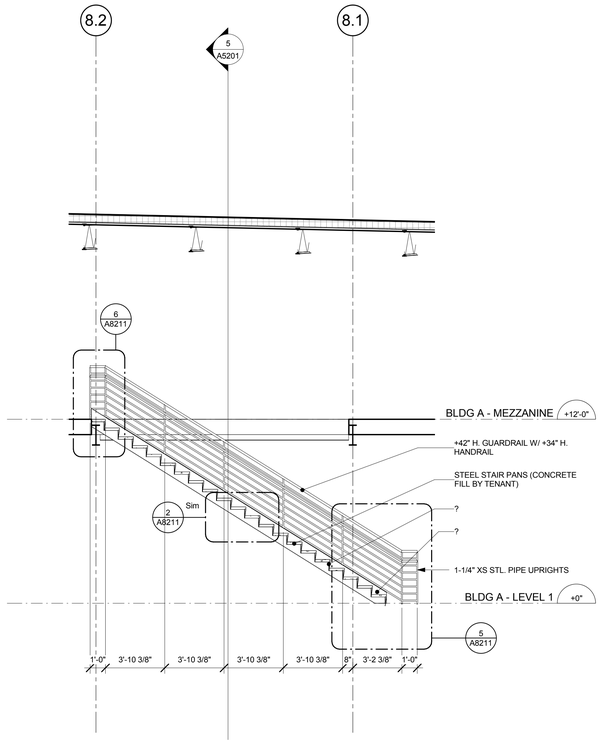

4 A5201 STAIR SECTION - NORTH - LONG.
Scale: 1/4" = 1'-0"

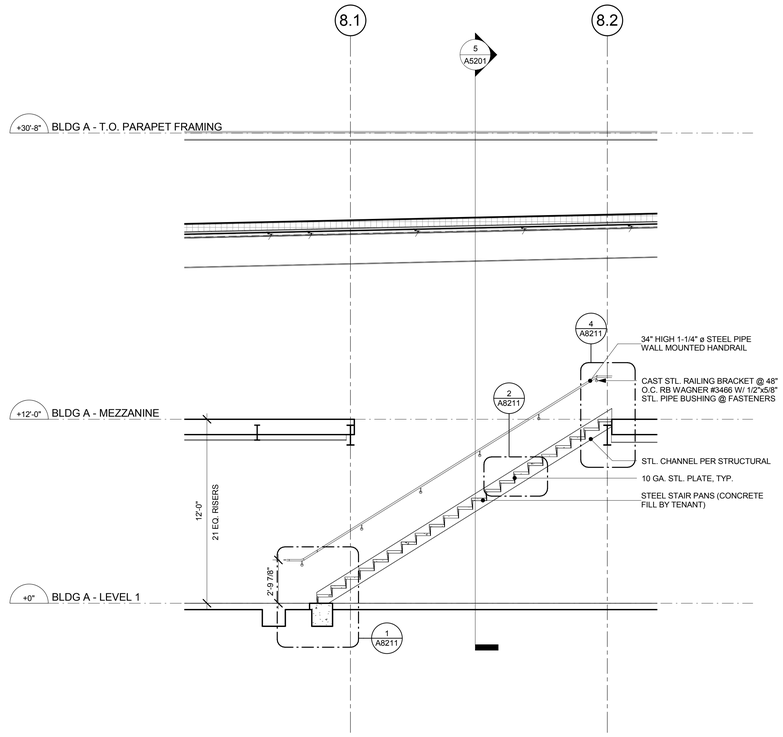

3 A5201 STAIR SECTION - NORTH - LONG.
Scale: 1/4" = 1'-0"

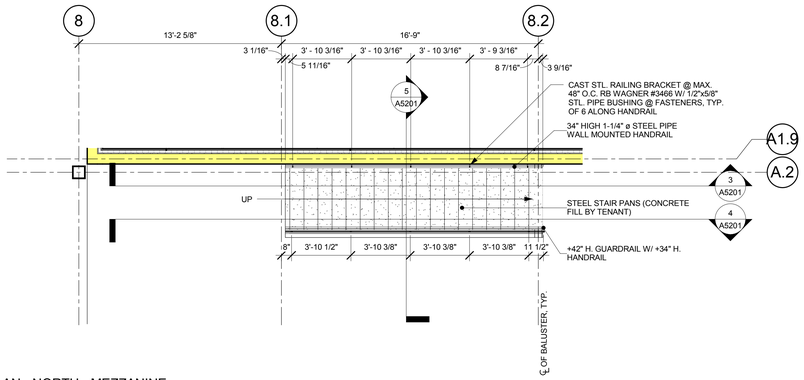

2 A5201 STAIR PLAN - NORTH - MEZZANINE
Scale: 1/4" = 1'-0"

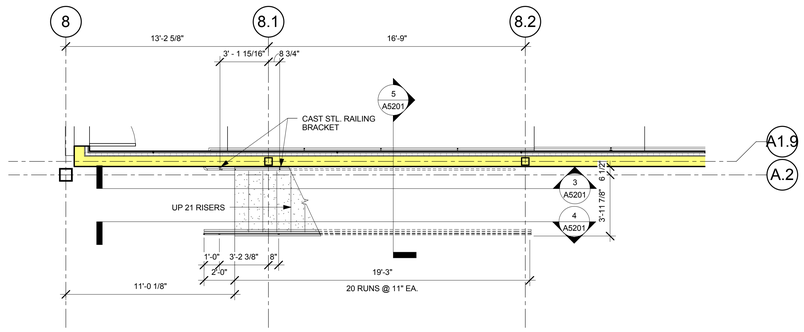

1 A5201 STAIR PLAN - NORTH - LEVEL 1
Scale: 1/4" = 1'-0"

CLIENT

CENTERCAL PROPERTIES, LLC

COPYRIGHT:

Any reproduction or distribution for any purpose other than authorized by IBI Group is forbidden. Written dimensions shall have precedence over scaled dimensions. Contractors shall verify and be responsible for all dimensions and conditions on the job, and report any errors or omissions to the Consultant then the dimensions and conditions shown on the drawing. Shop drawings shall be submitted to IBI Group for approval before proceeding with fabrication.

COPYRIGHT © 2016 IBI GROUP

ISSUES

NO.	ISSUANCE	STATUS	DATE
1	60% CD SET		5/31/2016

SEAL

10759 REGISTERED ARCHITECT
CRAIG ROTHENBURGER
STATE OF WASHINGTON

SUB CONSULTANT

PRIME CONSULTANT

IBI Group
18401 VON KARMAN AVE, SUITE 110
tel 949.833.5588 fax 949.833.5511
ibigroup.com

PROJECT

The Village at Totem Lake - Building A
Kirkland, Washington

PROJECT NO:	Building A
DRAWN BY:	Author
CHKD' BY:	Checker
SCALE:	1/4" = 1'-0"
DATE:	5/31/2016

SHEET TITLE

STAIR PLANS & SECTIONS - NORTH

BLDG	SHEET NUMBER	ISSUE
A	A5201	

C:\Users\nathan.walker\Documents\ATW_Totem_Bldg\A_2016_nthan.walker.rvt

5/31/2016 5:08:38 PM

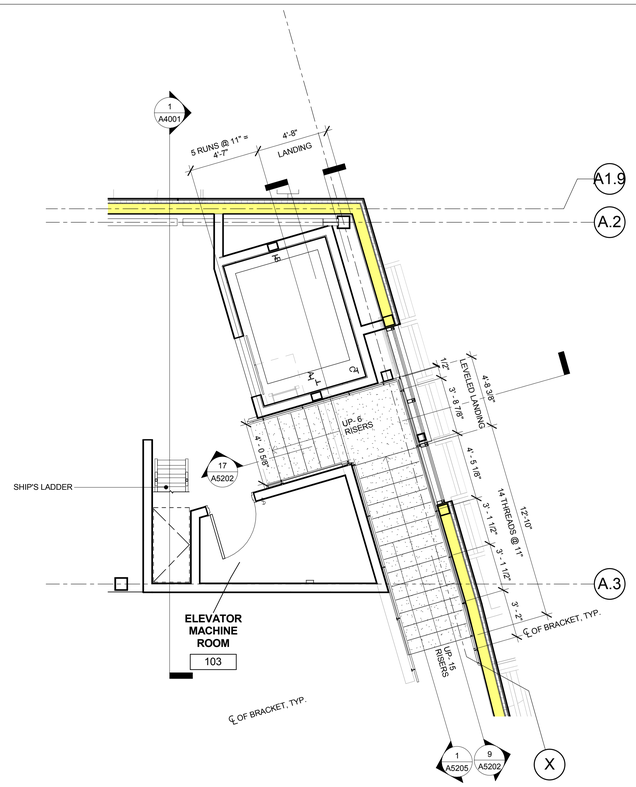

7 STAIR PLANS - SOUTH - MEZZANINE
A5202 Scale: 1/4" = 1'-0"

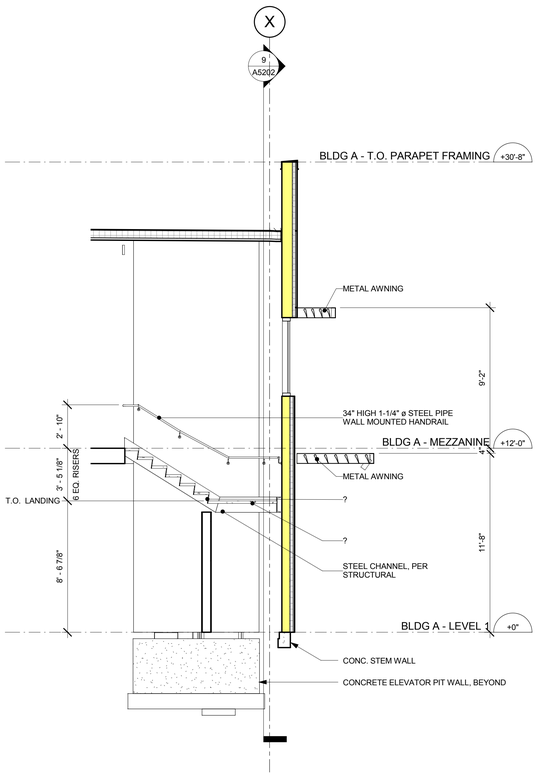

17 STAIR SECTIONS - SOUTH - CROSS
A5202 Scale: 1/4" = 1'-0"

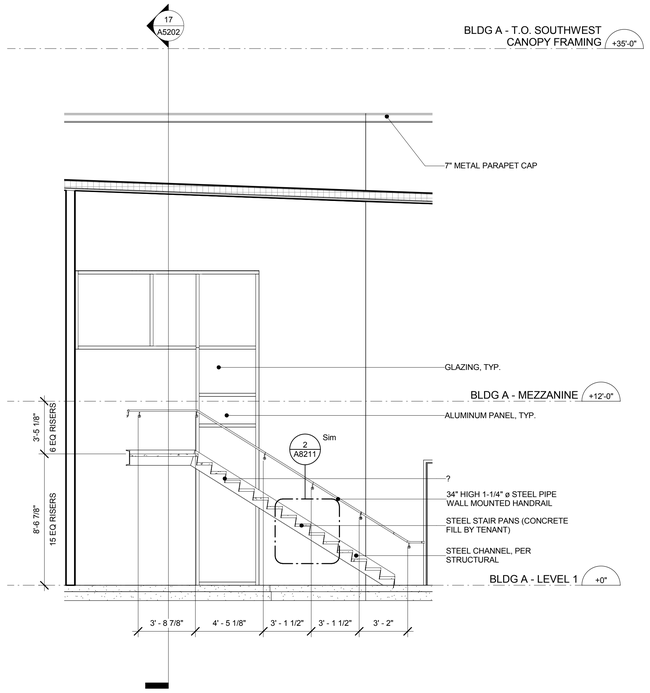

9 STAIR SECTIONS - SOUTH - LONG.
A5202 Scale: 1/4" = 1'-0"

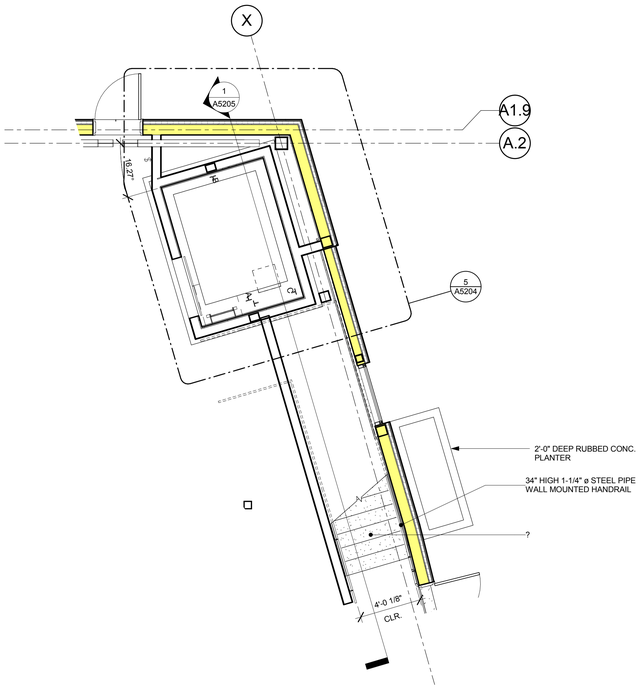

1 ENLARGED ELEVATOR/STAIRS PLAN
A5202 Scale: 1/4" = 1'-0"

CLIENT

CENTERCAL PROPERTIES, LLC

COPYRIGHT:

Any reproduction or distribution for any purpose other than authorized by IBI Group is forbidden. Written dimensions shall have precedence over scaled dimensions. Contractors shall verify and be responsible for all dimensions and conditions on the job, and IBI Group must be informed of any variations from the dimensions and conditions shown on the drawing. Shop drawings shall be submitted to IBI Group for approval before proceeding with fabrication.

COPYRIGHT © 2016 IBI GROUP

ISSUES

NO.	ISSUANCE	STATUS	DATE
1	60% CD SET		5/31/2016

SEAL

10759 REGISTERED ARCHITECT
CRAIG ROTHENBURGER
STATE OF WASHINGTON

SUB CONSULTANT

PRIME CONSULTANT

IBI Group
18401 VON KARMAN AVE, SUITE 110
tel 949.833.5588 fax 949.833.5511
ibigroup.com

PROJECT
The Village at Totem Lake - Building A
Kirkland, Washington

PROJECT NO:	Building A
DRAWN BY:	Author
CHKD' BY:	Checker
SCALE:	1/4" = 1'-0"
DATE:	5/31/2016

SHEET TITLE
STAIR PLANS & SECTIONS - SOUTH

BLDG	SHEET NUMBER	ISSUE
A	A5202	

C:\Users\nathan.walker\Documents\ATW_Totem_Bldg\A_A_2016_nathan.walker.rvt

5/31/2016 5:08:39 PM

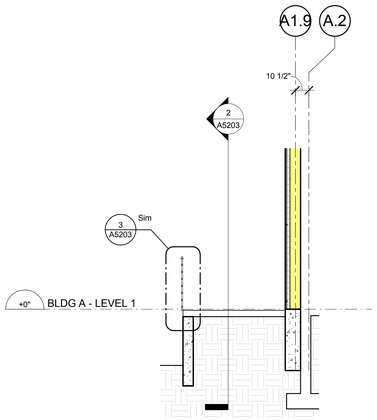

4 A5203 TRANSVERSE SECTION - RAMP
Scale: 1/4" = 1'-0"

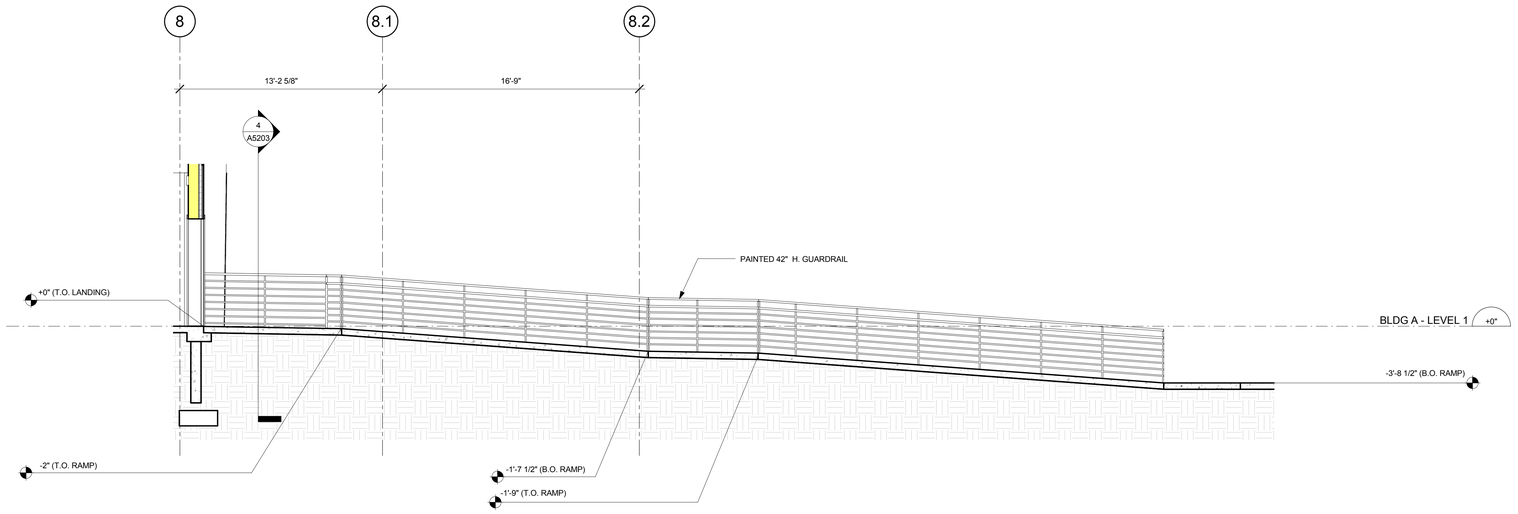

2 A5203 RAMP LONGITUDINAL SECTION
Scale: 1/4" = 1'-0"

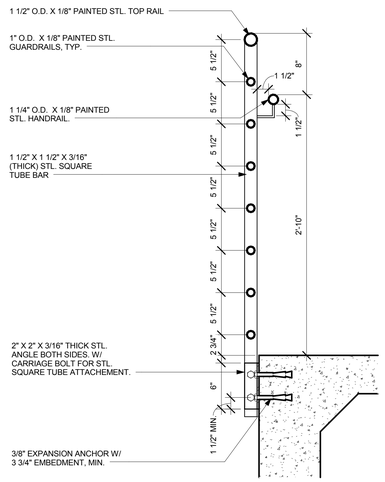

3 A5203 RAMP GUARDRAIL
Scale: 1 1/2" = 1'-0"

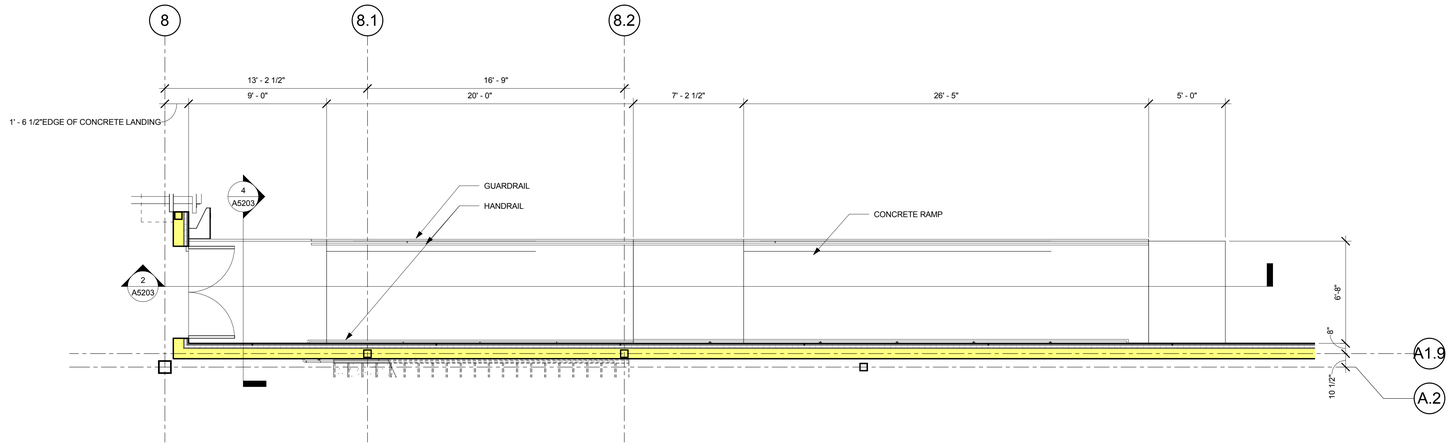

1 A5203 ENLARGED RAMP PLAN
Scale: 1/4" = 1'-0"

CLIENT

CENTERCAL PROPERTIES, LLC

COPYRIGHT:

Any reproduction or distribution for any purpose other than authorized by IBI Group is forbidden. Written dimensions shall have precedence over scaled dimensions. Contractors shall verify and be responsible for all dimensions and conditions on site. IBI Group must be notified of any variations from the dimensions and conditions shown on the drawing. Shop drawings shall be submitted to IBI Group for approval before proceeding with fabrication.

COPYRIGHT © 2016 IBI GROUP

ISSUES

NO.	ISSUANCE	STATUS	DATE
1	60% CD SET		5/31/2016

SEAL

10759 REGISTERED ARCHITECT
CRAIG ROTHENBURGER
STATE OF WASHINGTON

SUB CONSULTANT

PRIME CONSULTANT

IBI Group
18401 VON KARMAN AVE, SUITE 110
tel 949.833.5588 fax 949.833.5511
ibigroup.com

PROJECT
The Village at Totem Lake - Building A
Kirkland, Washington

PROJECT NO:	Building A
DRAWN BY:	Author
CHKD' BY:	Checker
SCALE:	As indicated
DATE:	5/31/2016

SHEET TITLE
EXTERIOR RAMP DETAILS

BLDG	SHEET NUMBER	ISSUE
A	A5203	

C:\Users\ethan.walker\Documents\ATW_Totem_Bldg_A_2016_ethan.walker.rvt

5/31/2016 5:05:39 PM

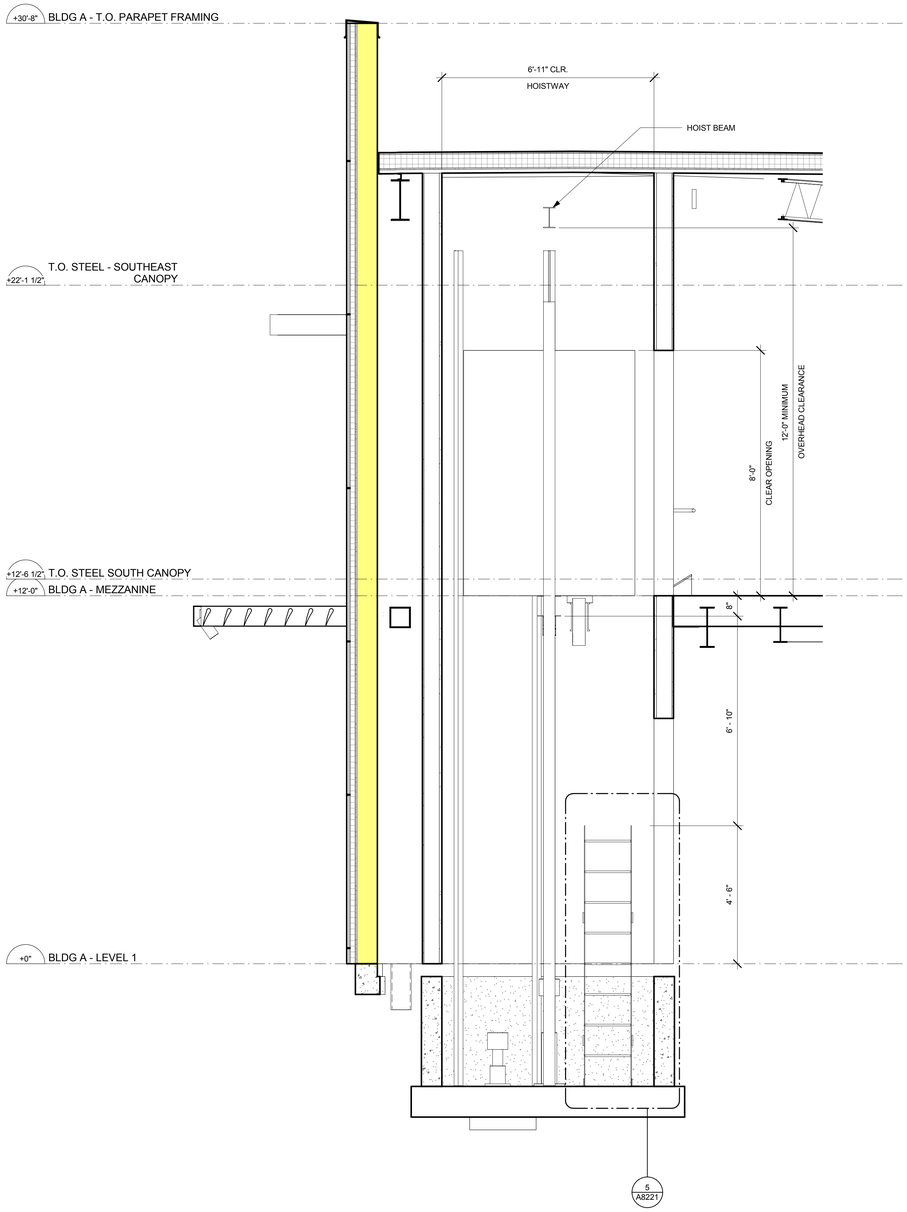

17 ELEVATOR CROSS SECTION
A5204 Scale: 1/2" = 1'-0"

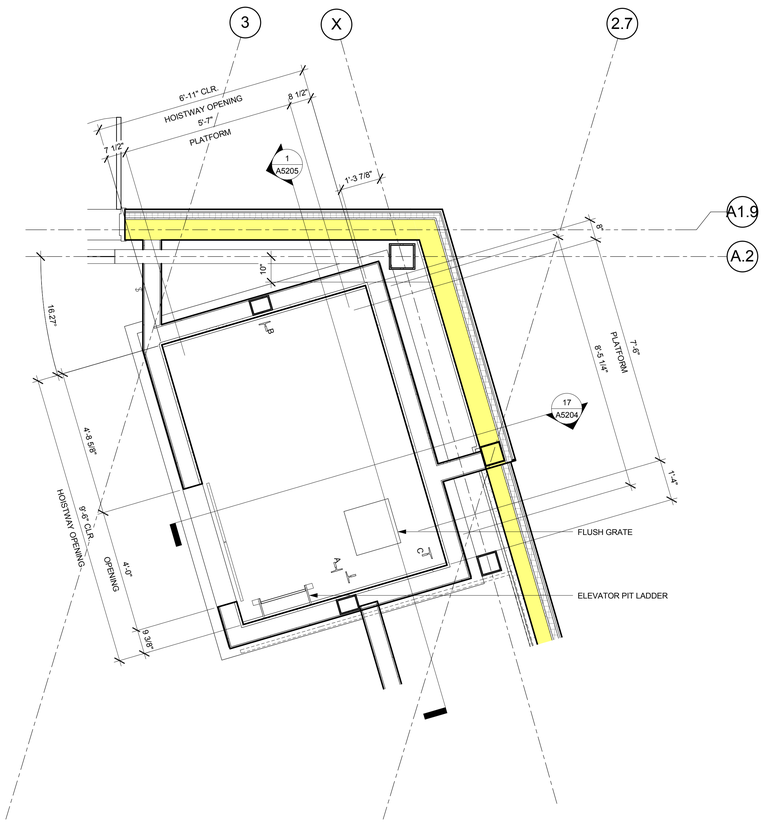

5 ENLARGED ELEVATOR PLAN
A5204 Scale: 1/2" = 1'-0"

CLIENT

CENTERCAL PROPERTIES, LLC

COPYRIGHT:

Any reproduction or distribution for any purpose other than authorized by IBI Group is forbidden. Written dimensions shall have precedence over scaled dimensions. Contractors shall verify and be responsible for all dimensions and conditions on the job, and IBI Group must be informed of any variation from the dimensions and conditions shown on the drawing. Shop drawings shall be submitted to IBI Group for approval before proceeding with fabrication.

COPYRIGHT © 2016 IBI GROUP

ISSUES

NO.	ISSUANCE	STATUS	DATE
1	60% CD SET		5/31/2016

SEAL

10759 REGISTERED ARCHITECT
CRAIG ROTHENBURGER
STATE OF WASHINGTON

SUB CONSULTANT

PRIME CONSULTANT

IBI Group
18401 VON KARMAN AVE, SUITE 110
tel 949.833.5588 fax 949.833.5511
ibigroup.com

PROJECT
The Village at Totem Lake - Building A
Kirkland, Washington

PROJECT NO:	Building A
DRAWN BY:	Author
CHKD' BY:	Checker
SCALE:	1/2" = 1'-0"
DATE:	5/31/2016

SHEET TITLE
ELEVATOR PLAN AND SECTIONS - DO NOT PRINT

BLDG	SHEET NUMBER	ISSUE
A	A5204	

C:\Users\nathan.walker\Documents\ATW_Totem_Bldg\A_A_2016_nthan.walker.rvt

5/31/2016 5:58:40 PM

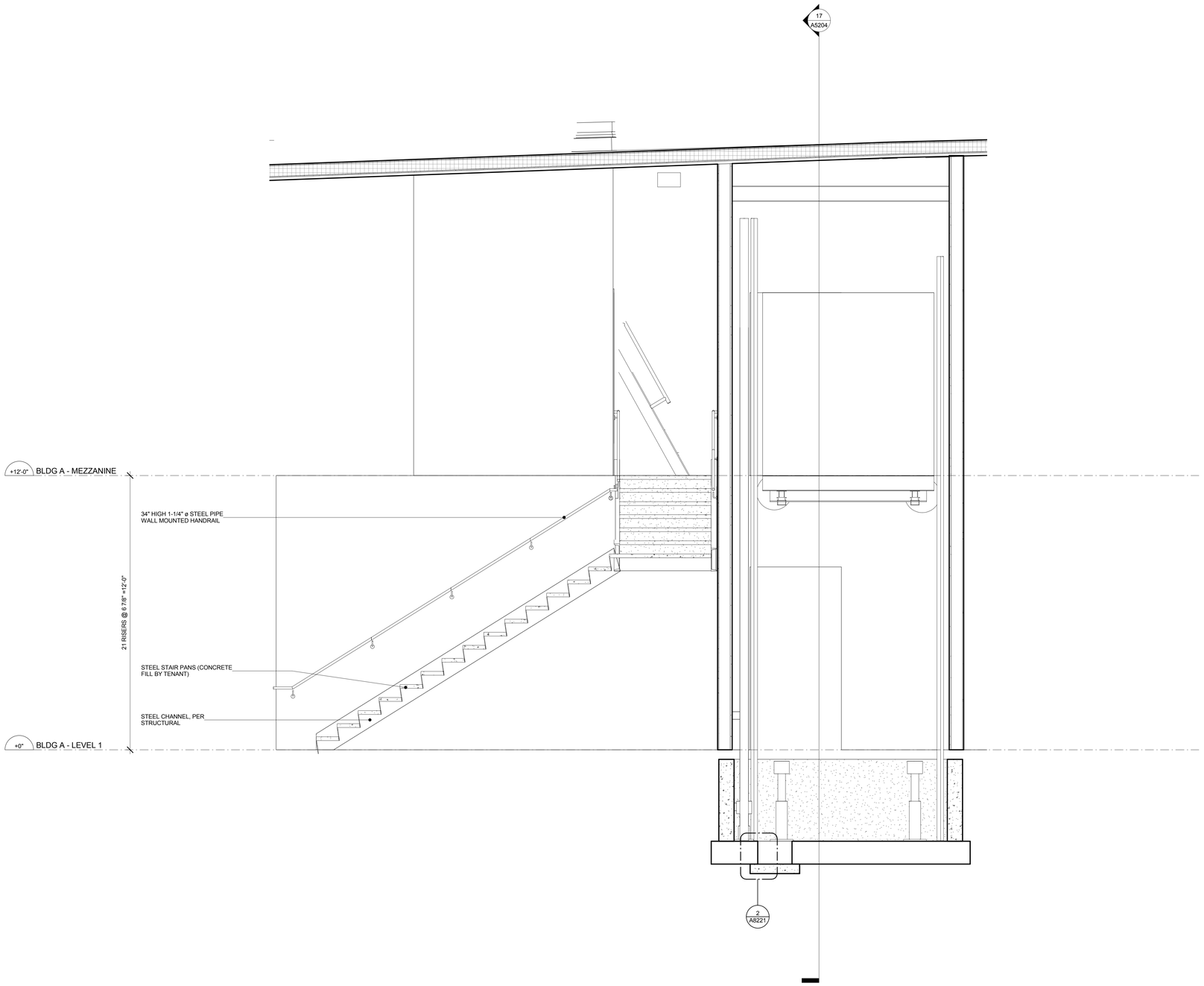

1 A5205 Section 20
Scale: 1/2" = 1'-0"

CLIENT

CENTERCAL PROPERTIES, LLC

COPYRIGHT:

Any reproduction or distribution for any purpose other than authorized by IBI Group is forbidden. Written dimensions shall have precedence over scaled dimensions. Contractors shall verify and be responsible for all dimensions and conditions on the job, and IBI Group must be informed of any variation from the dimensions and conditions shown on the drawing. Shop drawings shall be submitted to IBI Group for approval before proceeding with fabrication.

COPYRIGHT © 2016 IBI GROUP

ISSUES

NO.	ISSUANCE	STATUS	DATE
1	60% CD SET		5/31/2016

SEAL

10759 REGISTERED ARCHITECT
CRAIG ROTHENBURGER
STATE OF WASHINGTON

SUB CONSULTANT

PRIME CONSULTANT

IBI Group
18401 VON KARMAN AVE, SUITE 110
tel 949.833.5588 fax 949.833.5511
ibigroup.com

PROJECT
The Village at Totem Lake - Building A
Kirkland, Washington

PROJECT NO:	Building A
DRAWN BY:	Author
CHKD' BY:	Checker
SCALE:	1/2" = 1'-0"
DATE:	5/31/2016

SHEET TITLE
ELEVATOR SECTION

BLDG	SHEET NUMBER	ISSUE
A	A5205	

C:\Users\ethan.walker\Documents\ATW_Totem_B\bldg_A_2016_ethan.walker.rvt

5/31/2016 5:58:40 PM

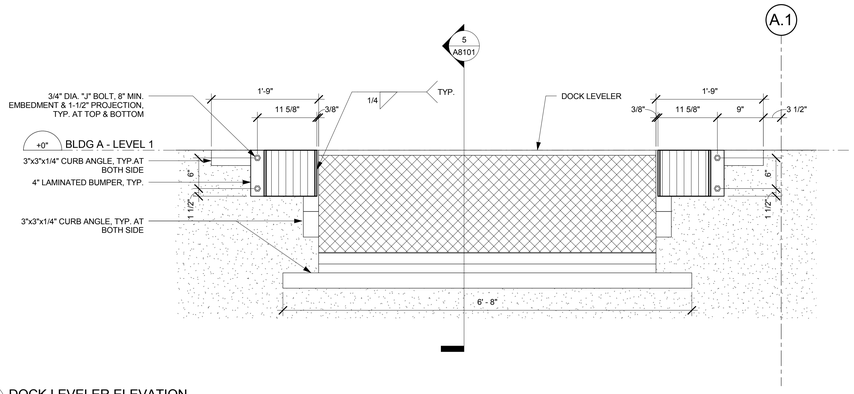

8 A8101 DOCK LEVELER ELEVATION
Scale: 1" = 1'-0"

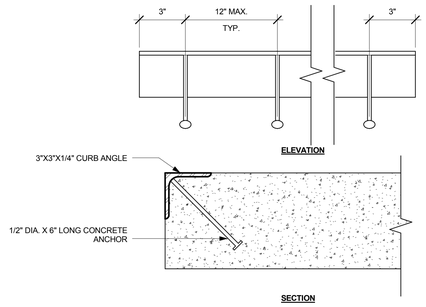

3 A8101 CURB ANGLE ANCHOR
Scale: 3" = 1'-0"

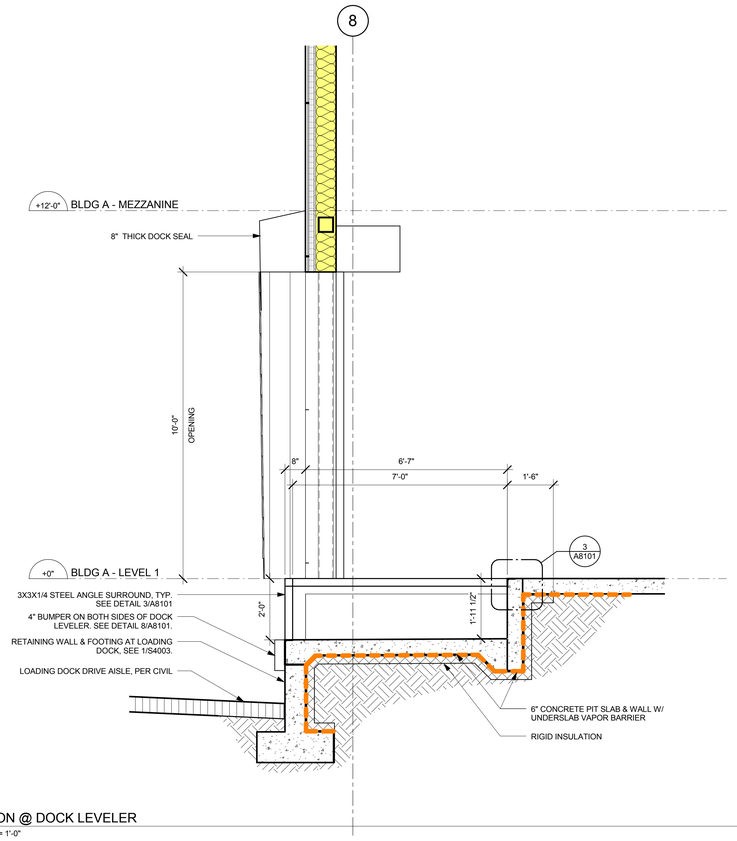

5 A8101 SECTION @ DOCK LEVELER
Scale: 1/2" = 1'-0"

CLIENT

CENTERCAL PROPERTIES, LLC

COPYRIGHT:

Any reproduction or distribution for any purpose other than authorized by IBI Group is forbidden. Written dimensions shall have precedence over scaled dimensions. Contractors shall verify and be responsible for all dimensions and conditions on site. IBI Group must be notified of any variations from the dimensions and conditions shown on the drawing. Shop drawings shall be submitted to IBI Group for approval before proceeding with fabrication.

COPYRIGHT © 2016 IBI GROUP

ISSUES

NO.	ISSUANCE	STATUS	DATE
1	60% CD SET		5/31/2016

SEAL

10759 REGISTERED ARCHITECT
CRAIG ROTHENBURGER
STATE OF WASHINGTON

SUB CONSULTANT

PRIME CONSULTANT

IBI Group
18401 VON KARMAN AVE, SUITE 110
tel 949.833.5588 fax 949.833.5511
ibigroup.com

PROJECT
The Village at Totem Lake - Building A
Kirkland, Washington

PROJECT NO:	Building A
DRAWN BY:	Author
CHKD' BY:	Checker
SCALE:	As indicated
DATE:	5/31/2016

SHEET TITLE
PLAN DETAILS

BLDG	SHEET NUMBER	ISSUE
A	A8101	

5/31/2016 5:09:40 PM C:\Users\ethan.walker\Documents\ATW_Totem_Bldg\A_A_2016_ethan.walker.rvt

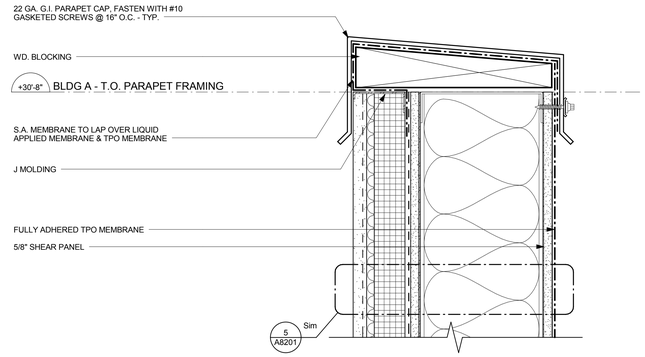

8 / A8201 TYPICAL PARAPET CAP DETAIL

Scale: 3" = 1'-0"

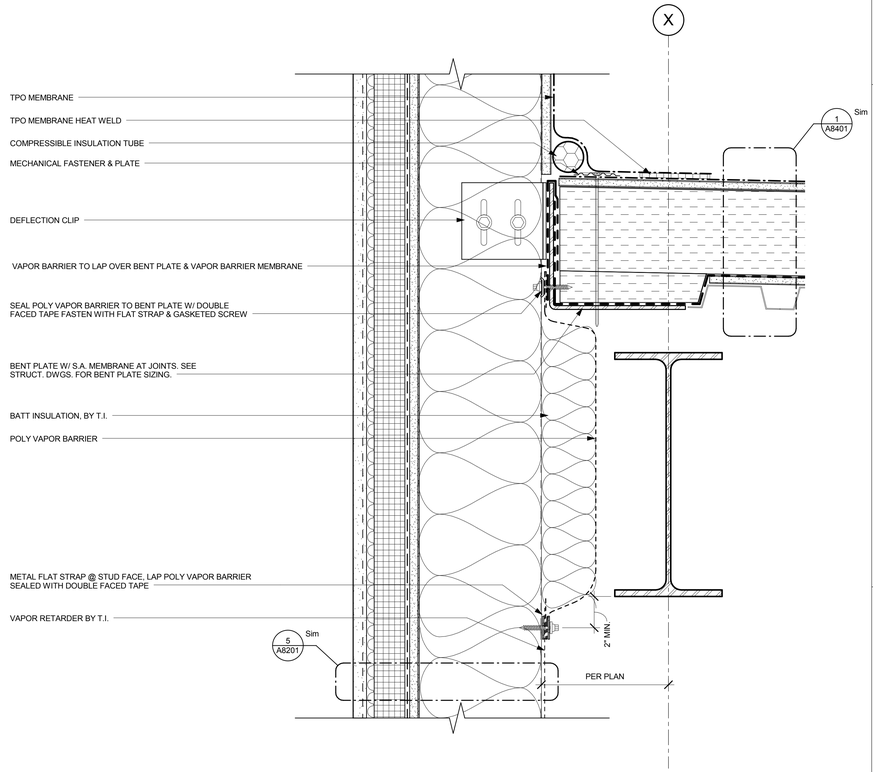

6 / A8201 TYPICAL WALL TO ROOF DETAIL

Scale: 3" = 1'-0"

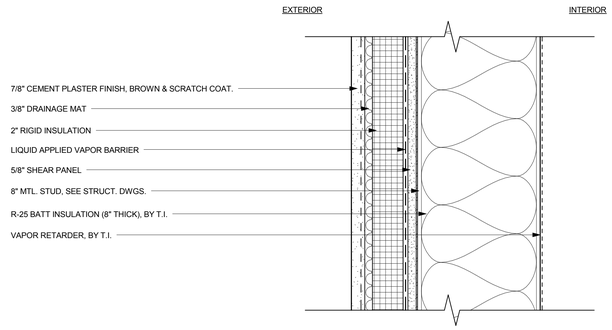

5 / A8201 TYPICAL WALL DETAIL - STUCCO

Scale: 3" = 1'-0"

CLIENT

CENTERCAL PROPERTIES, LLC

COPYRIGHT:

Any reproduction or distribution for any purpose other than authorized by IBI Group is forbidden. Written dimensions shall have precedence over scaled dimensions. Contractors shall verify and be responsible for all dimensions and conditions on this drawing. No ordinary minor variations from dimensions shall alter the dimensions and conditions shown on the drawing. Shop drawings shall be submitted to IBI Group for approval before proceeding with fabrication.

COPYRIGHT © 2016 IBI GROUP

ISSUES

NO.	ISSUANCE	STATUS	DATE
1	60% CD SET		5/31/2016

SEAL

10759 REGISTERED ARCHITECT

CRAIG ROTHENBURGER
STATE OF WASHINGTON

SUB CONSULTANT

PRIME CONSULTANT

IBI Group
18401 VON KARMAN AVE, SUITE 110
tel 949.833.5588 fax 949.833.5511
ibigroup.com

PROJECT

The Village at Totem Lake - Building A
Kirkland, Washington

PROJECT NO:	Building A
DRAWN BY:	Author
CHKD' BY:	Checker
SCALE:	3" = 1'-0"
DATE:	5/31/2016

SHEET TITLE

WALL DETAILS

BLDG	SHEET NUMBER	ISSUE
A	A8201	

5/31/2016 5:58:41 PM C:\Users\nathan.walker\Documents\ATW_Totem_Bldg\A_A_2016_nathan.walker.rvt

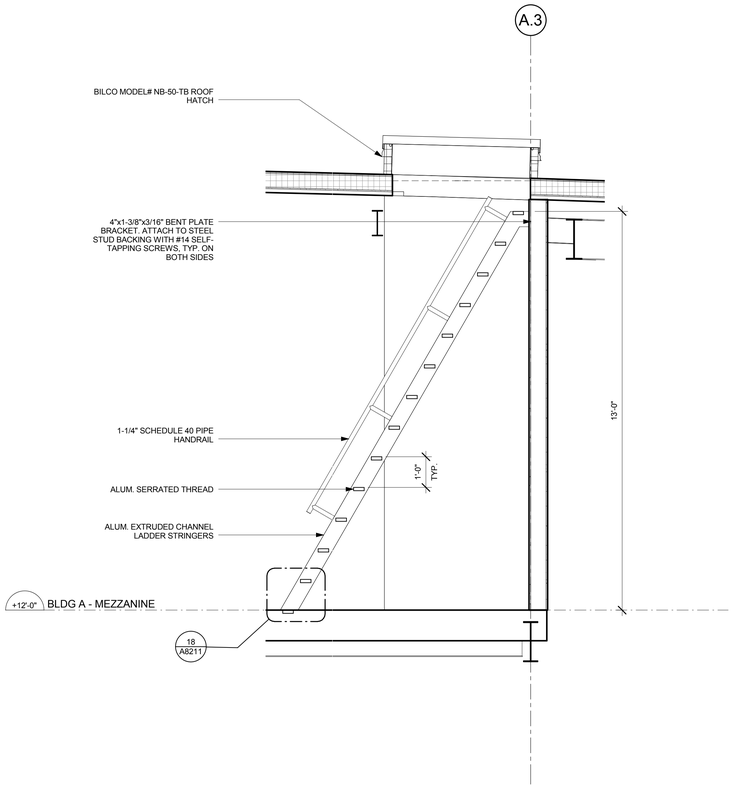

19 SHIP LADDER DETAIL
A8211 Scale: 1/2" = 1'-0"

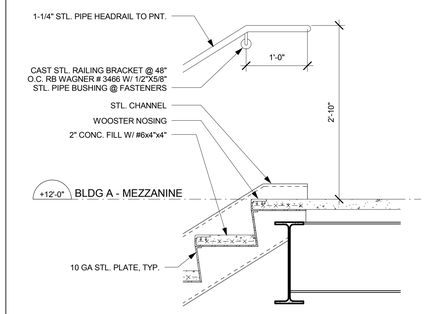

4 MEZZANINE - STAIR DETAIL & WALL MOUNTED HANDRAIL
A8211 Scale: 1" = 1'-0"

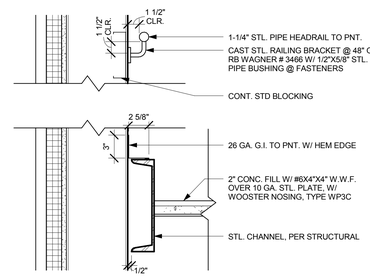

3 STAIR DETAIL & WALL MOUNTED HANDRAIL
A8211 Scale: 1 1/2" = 1'-0"

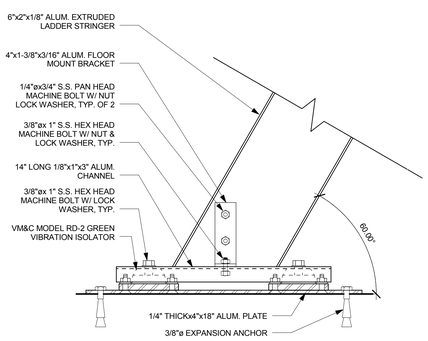

18 SHIP LADDER SEISMIC MOUNTING BRACKET
A8211 Scale: 3" = 1'-0"

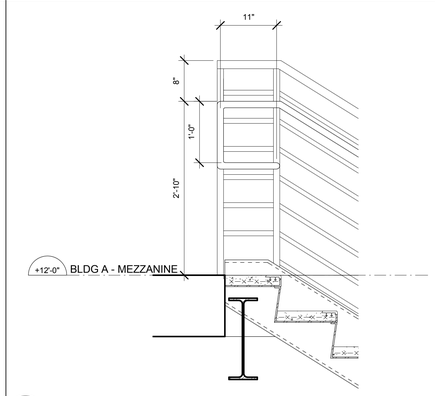

6 GUARDRAIL W/ HANDRAIL DETAIL @ TOP OF STAIR
A8211 Scale: 1" = 1'-0"

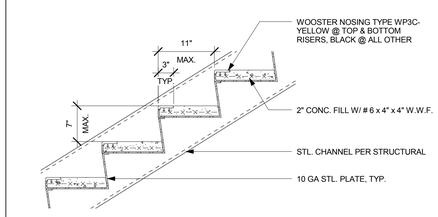

2 STAIR DETAIL - METAL PAN & CONC. FILL ASSEMBLY
A8211 Scale: 1" = 1'-0"

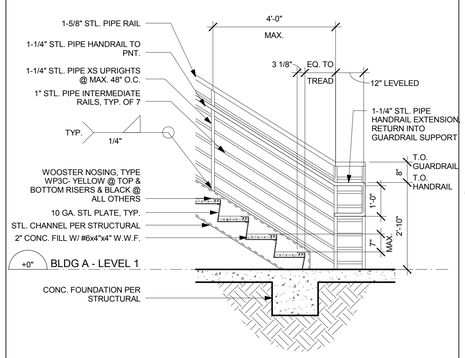

5 GUARDRAIL W/ HANDRAIL DETAIL @ BOTTOM OF STAIR
A8211 Scale: 1/2" = 1'-0"

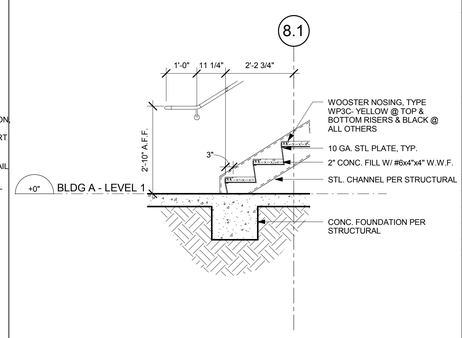

1 LEVEL 1 - STAIR DETAIL & WALL MOUNTED HANDRAIL
A8211 Scale: 1/2" = 1'-0"

CLIENT

CENTERCAL PROPERTIES, LLC

COPYRIGHT:

Any reproduction or distribution for any purpose other than authorized by IBI Group is forbidden. Written dimensions shall have precedence over scaled dimensions. Contractors shall verify and be responsible for all dimensions and conditions on this drawing. No ordinary variations from dimensions shall alter the dimensions and conditions shown on the drawing. Shop drawings shall be submitted to IBI Group for approval before proceeding with fabrication.

COPYRIGHT © 2016 IBI GROUP

ISSUES

NO.	ISSUANCE	STATUS	DATE
1	60% CD SET		5/31/2016

SEAL

10759 REGISTERED ARCHITECT
CRAIG ROTHENBURGER
STATE OF WASHINGTON

SUB CONSULTANT

PRIME CONSULTANT

IBI Group
18401 VON KARMAN AVE, SUITE 110
tel 949.833.5588 fax 949.833.5511
ibigroup.com

PROJECT

The Village at Totem Lake - Building A
Kirkland, Washington

PROJECT NO:	Building A
DRAWN BY:	Author
CHKD' BY:	Checker
SCALE:	As indicated
DATE:	5/31/2016

SHEET TITLE

STAIR DETAILS

BLDG	SHEET NUMBER	ISSUE
A	A8211	

C:\Users\nathan.walker\Documents\ATW_Totem_B\bldg A_A_2016_nthan.walker.rvt

5/31/2016 5:59:42 PM

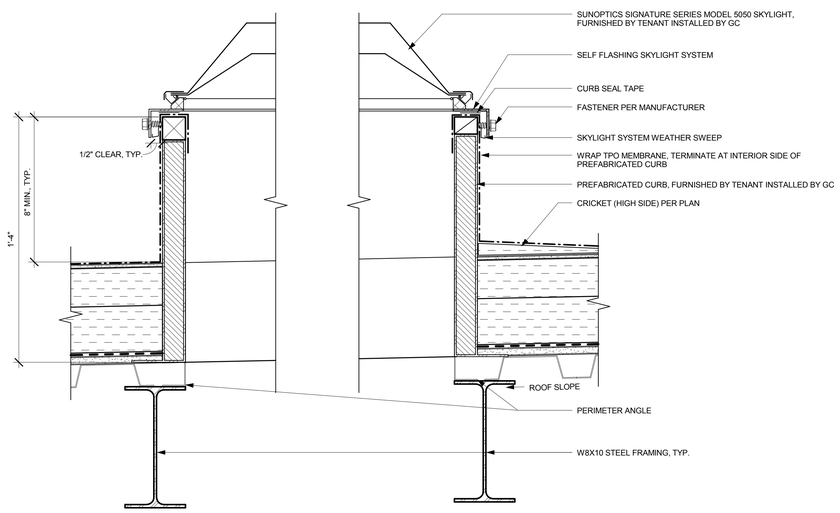

19 A8401 ROOF - SKYLIGHT
Scale: 3" = 1'-0"

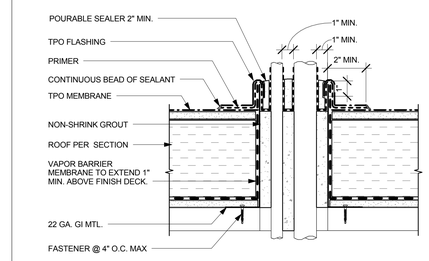

4 A8401 ROOF - MULTIPLE PIPE PENETRATION
Scale: 3" = 1'-0"

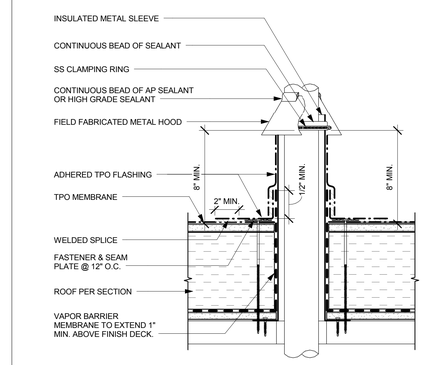

3 A8401 ROOF - HOT STACK PENETRATION
Scale: 3" = 1'-0"

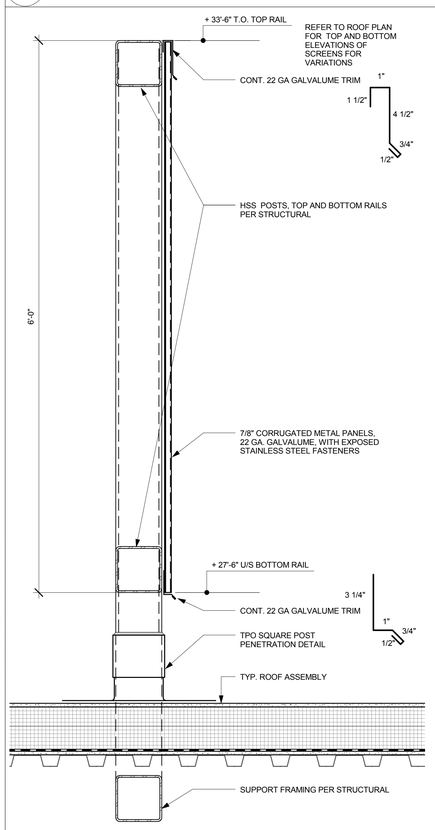

17 A8401 TYPICAL MECHANICAL SCREEN
Scale: 1 1/2" = 1'-0"

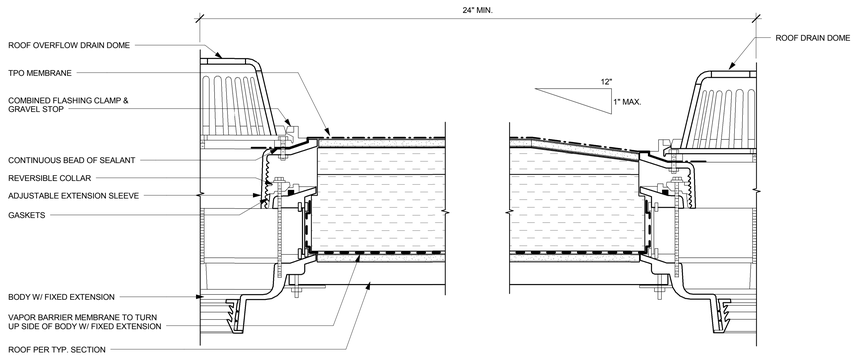

13 A8401 ROOF - COMBINATION DRAIN & OVERFLOW
Scale: 3" = 1'-0"

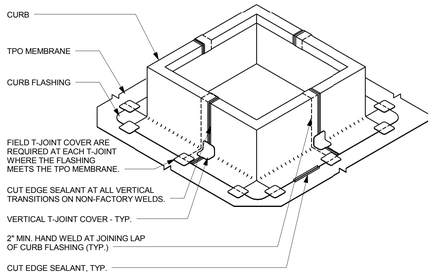

5 A8401 ROOF - CURB FLASHING
Scale: NTS

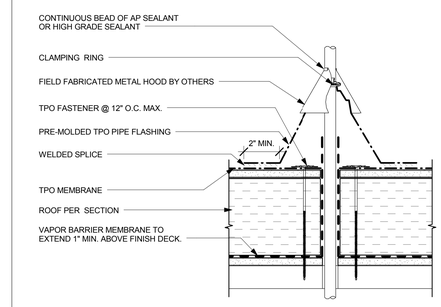

2 A8401 ROOF - PIPE PENETRATION
Scale: 3" = 1'-0"

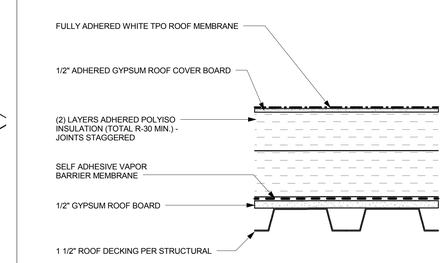

1 A8401 ROOF - TYPICAL SECTION
Scale: 3" = 1'-0"

CLIENT

CENTERCAL PROPERTIES, LLC

COPYRIGHT:

Any reproduction or distribution for any purpose other than authorized by IBI Group is forbidden. Written dimensions shall have precedence over scaled dimensions. Contractors shall verify and be responsible for all dimensions and conditions on site. IBI Group shall be notified of any variations from the dimensions and conditions shown on the drawing. Shop drawings shall be submitted to IBI Group for approval before proceeding with fabrication.

COPYRIGHT © 2016 IBI GROUP

ISSUES

NO.	ISSUANCE	STATUS	DATE
1	60% CD SET		5/31/2016

SEAL

10759 REGISTERED ARCHITECT
CRAIG ROTHENBURGER
STATE OF WASHINGTON

SUB CONSULTANT

PRIME CONSULTANT

IBI Group
18401 VON KARMAN AVE, SUITE 110
tel 949.833.5588 fax 949.833.0511
ibigroup.com

PROJECT
The Village at Totem Lake - Building A
Kirkland, Washington

PROJECT NO:	Building A
DRAWN BY:	Author
CHKD' BY:	Checker
SCALE:	As indicated
DATE:	5/31/2016

SHEET TITLE
ROOF DETAILS

BLDG	SHEET NUMBER	ISSUE
A	A8401	

C:\Users\nathan.walker\Documents\ATW_Totem_Bldg\A_A_2016_nthan.walker.rvt

5/31/2016 5:58:45 PM

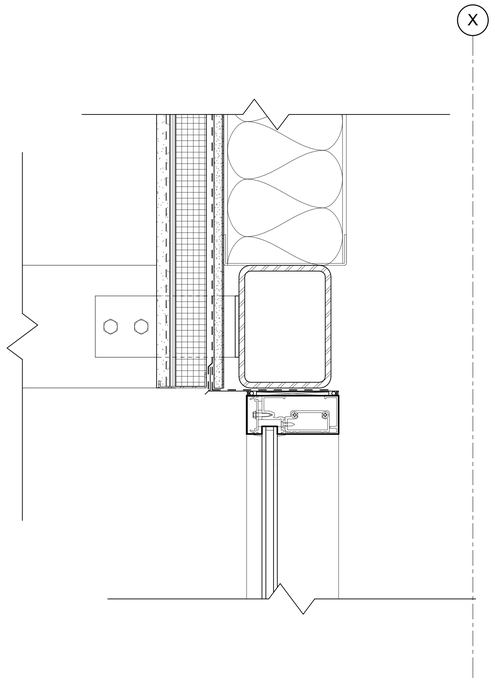

11 A8601 STOREFRONT HEADER @ METAL AWNING
Scale: 3" = 1'-0"

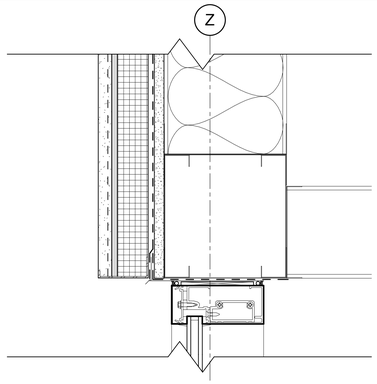

4 A8601 STOREFRONT HEADER @ STUCCO WALL
Scale: 3" = 1'-0"

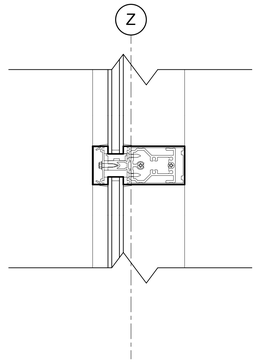

3 A8601 STOREFRONT HORIZONTAL MULLION
Scale: 3" = 1'-0"

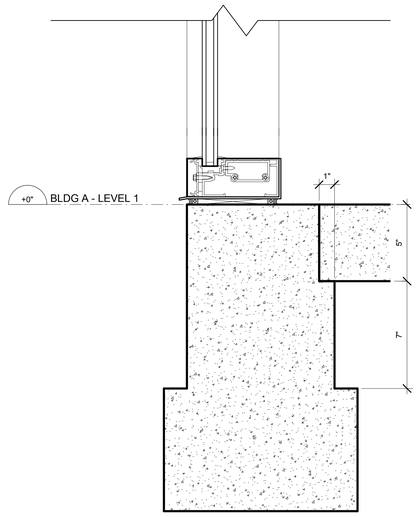

1 A8601 STOREFRONT SILL
Scale: 3" = 1'-0"

CLIENT

CENTERCAL PROPERTIES, LLC

COPYRIGHT:

Any reproduction or distribution for any purpose other than authorized by IBI Group is forbidden. Written dimensions shall have precedence over scaled dimensions. Contractors shall verify and be responsible for all dimensions and conditions on the job, and IBI Group must be informed of any variation from the dimensions and conditions shown on the drawing. Shop drawings shall be submitted to IBI Group for approval before proceeding with fabrication.

COPYRIGHT © 2016 IBI GROUP

ISSUES

NO.	ISSUANCE	STATUS	DATE
1	60% CD SET		5/31/2016

SEAL

10759 REGISTERED ARCHITECT
CRAIG ROTHENBURGER
STATE OF WASHINGTON

SUB CONSULTANT

PRIME CONSULTANT

IBI Group
18401 VON KARMAN AVE, SUITE 110
tel 949.833.5588 fax 949.833.5511
ibigroup.com

PROJECT
The Village at Totem Lake - Building A
Kirkland, Washington

PROJECT NO:	Building A
DRAWN BY:	DC
CHKD' BY:	Checker
SCALE:	3" = 1'-0"
DATE:	5/31/2016

SHEET TITLE
OPENING DETAILS

BLDG	SHEET NUMBER	ISSUE
A	A8601	

C:\Users\nathan.walker\Documents\ATW_Totem_Bldg A_2016_nathan.walker.rvt

5/31/2016 5:58:50 PM

Building A - Door Schedule

DOOR NO.	Door Type	Door Width	Door Height	Door Thickness	Door Material	Door Finish	Hardware Set	Fire Rating	Frame Material	Details Head	Details Jamb	Details Sill	Comments
D-00	G	18'-5"	11'-6"	1 3/4"		F1		Model 521 Overhead Door	ALUM				
D-01	C	2'-11"	8'-6"	0"		F1			ALUM				
D-02	A	3'-0"	8'-0"	1 3/4"		HM		#HR	HM				
D-03	B	6'-0"	7'-0"	2"		HM			HM				
D-04	F	8'-0"	10'-0"	2"		F1							
D-05	F	8'-0"	10'-0"	2"		F1							
D-07	B	6'-0"	7'-0"	2"		HM			HM				
D-08	D	16'-0"	8'-6"	2"		F1			ALUM				
D-09	D	16'-0"	8'-6"	2"		F1			ALUM				
D-11		14'-0"	8'-6"	2"									
D-12	G	18'-0"	11'-6"	1 3/4"		F1		Model 521 Overhead Door	ALUM				
D-13	C	3'-0"	8'-6"	1 3/4"		F1			HM				
D-14	G	18'-11"	11'-6"	1 3/4"		F1		Model 521 Overhead Door	ALUM				
D-15	A	3'-0"	8'-0"	1 3/4"		HM		#HR	HM				
D-16	E	2'-6"	1'-0 5/8"			F1							
D-19		14'-0"	8'-6"	2"									
D-20		3'-0"	8'-0"	1 3/4"				#HR					
D-21		3'-0"	8'-0"										
D-22		3'-0"	8'-0"	1 3/4"									

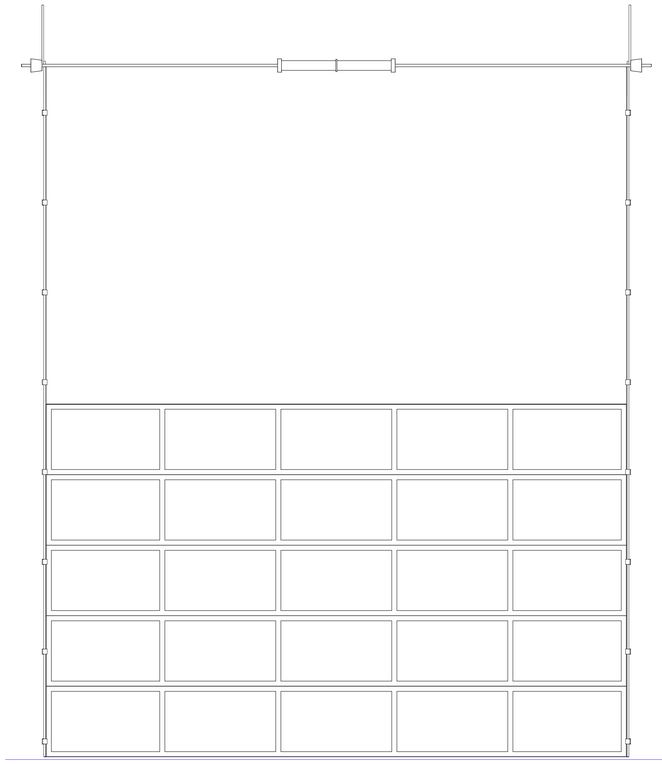

G OVERHEAD DOOR

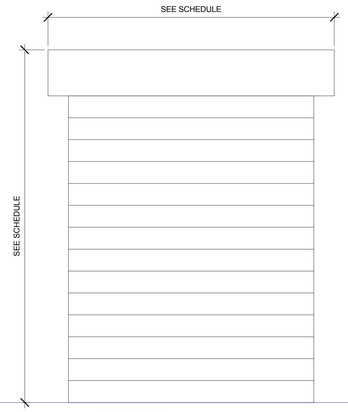

F OVERHEAD DOOR

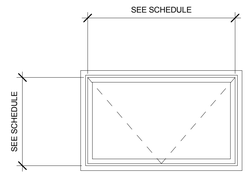

E ACCESS DOOR
ROOF ACCESS HATCH DOOR

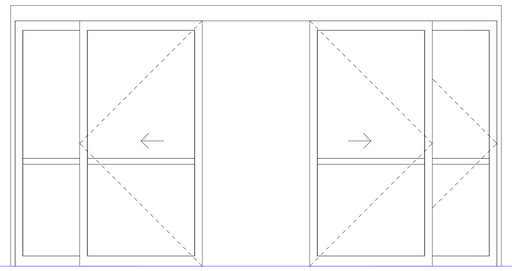

D SLIDING DOOR
ALUMINUM SLIDING DOOR

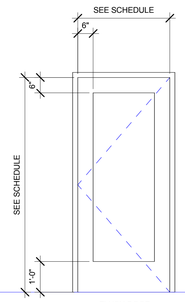

C FLUSH DOOR
ALUMINUM STOREFRONT DOOR

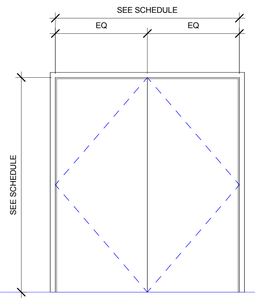

B FLUSH DOOR
SINGLE HOLLOW METAL DOOR

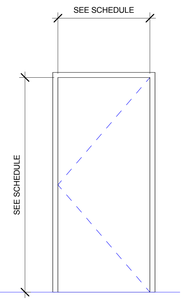

A FLUSH DOOR
SINGLE HOLLOW METAL DOOR

CLIENT

CENTERCAL PROPERTIES, LLC

COPYRIGHT:

Any reproduction or distribution for any purpose other than authorized by IBI Group is forbidden. Written dimensions shall have precedence over scaled dimensions. Contractors shall verify and be responsible for all dimensions and conditions on this drawing. No ordinance, regulation or interpretation thereof shall alter the dimensions and conditions shown on the drawing. Shop drawings shall be submitted to IBI Group for approval before proceeding with fabrication.

COPYRIGHT © 2016 IBI GROUP

ISSUES

NO.	ISSUANCE	STATUS	DATE
1	60% CD SET		5/31/2016

SEAL

10759 REGISTERED ARCHITECT
CRAIG ROTHENBURGER
STATE OF WASHINGTON

SUB CONSULTANT

PRIME CONSULTANT

IBI Group
18401 VON KARMAN AVE. SUITE 110
tel 949.833.5588 fax 949.833.5511
ibigroup.com

PROJECT
The Village at Totem Lake - Building A
Kirkland, Washington

PROJECT NO:	Building A
DRAWN BY:	Author
CHKD' BY:	Checker
SCALE:	1/2" = 1'-0"
DATE:	5/31/2016

SHEET TITLE
DOOR SCHEDULE

BLDG	SHEET NUMBER	ISSUE
A	A9101	

5/31/2016 5:58:51 PM C:\bim\rothen.walker\Documents\ATW_Totem_Bldg\A_A_2016_rothen.walker.rvt

Window Schedule

Mark	Type	Width	Head Height	Comments
207	60" x 60"	5'-0"		
208	60" x 60"	5'-0"		
209	60" x 60"	5'-0"		
215	60" x 60"	5'-0"		
213	60" x 60"	5'-0"		
221	60" x 60"	5'-0"		
222	60" x 60"	5'-0"		
216	60" x 60"	5'-0"		
210	60" x 60"	5'-0"		
202	60" x 60"	5'-0"		
203	60" x 60"	5'-0"		
204	60" x 60"	5'-0"		
201	60" x 60"	5'-0"		
212	60" x 60"	5'-0"		
218	60" x 60"	5'-0"		
217	60" x 60"	5'-0"		
223	60" x 60"	5'-0"		
224	60" x 60"	5'-0"		
219	60" x 60"	5'-0"		
220	60" x 60"	5'-0"		
214	60" x 60"	5'-0"		
205	60" x 60"	5'-0"		
206	60" x 60"	5'-0"		
211	60" x 60"	5'-0"		

STOREFRONT SCHEDULE

MARK	TYPE	LENGTH	HEIGHT	SILL HEIGHT	GLAZING TYPE	FRAME		DETAIL			
						MATERIAL	FINISH	HEAD	JAMB	SILL	HORIZONTAL MULLION
101	A	25'-9 3/8"	21'-1 1/4"	0"							
102	B	12'-0"	20'-6"	0"	DUAL PANED	ALUM	F1				
103	B	12'-0"	20'-6"	0"	DUAL PANED	ALUM	F1				
104	B	12'-0"	20'-6"	0"	DUAL PANED	ALUM	F1				
105	B	12'-0"	20'-6"	0"	DUAL PANED	ALUM	F1				
106	C	17'-3 5/8"	18'-11"	0"	DUAL PANED	ALUM	F1				
107	D	11'-5"	18'-11"	0"	DUAL PANED	ALUM	F1				
108	E	55'-7 3/4"	19'-2"	0"	DUAL PANED	ALUM	F1				
109	K	9'-0 1/2"	11'-6"	0"	DUAL PANED	ALUM	F1				
110	J	14'-0 1/8"	11'-6"	0"	DUAL PANED	ALUM	F1				
111	I	8'-9 1/2"	11'-6"	0"	DUAL PANED	ALUM	F1				
111	A	133'-3 1/8"	21'-1 1/4"	0"	DUAL PANED	ALUM	F1				
113	A	12'-3 1/4"	21'-1 1/4"	0"							

D ALUMINUM STOREFRONT

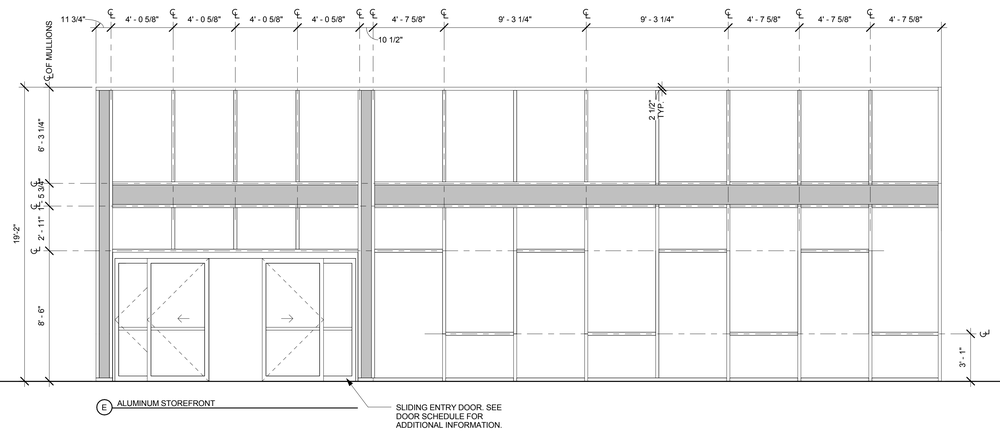

E ALUMINUM STOREFRONT

SLIDING ENTRY DOOR. SEE DOOR SCHEDULE FOR ADDITIONAL INFORMATION.

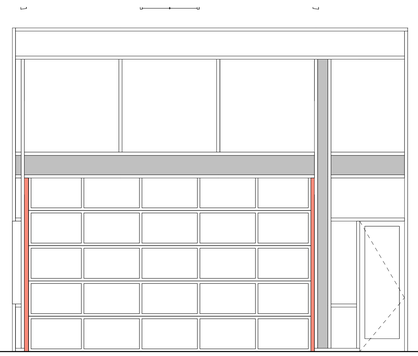

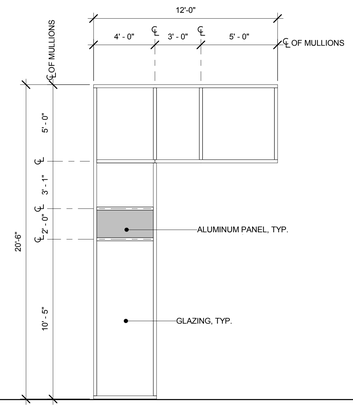

B ALUMINUM STOREFRONT

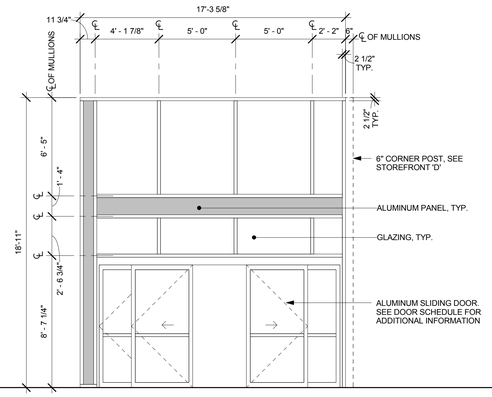

C ALUMINUM STOREFRONT

CLIENT

CENTERCAL PROPERTIES, LLC

COPYRIGHT:

Any reproduction or distribution for any purpose other than authorized by IBI Group is forbidden. Written dimensions shall have precedence over scaled dimensions. Contractors shall verify and be responsible for all dimensions and conditions on the job, and report any errors or omissions to the architect then the dimensions and conditions shown on the drawing. Shop drawings shall be submitted to IBI Group for approval before proceeding with fabrication.

COPYRIGHT © 2016 IBI GROUP

ISSUES

NO.	ISSUANCE	STATUS	DATE
1	60% CD SET		5/31/2016

SEAL

10759 REGISTERED ARCHITECT
CRAIG ROTHENBURGER
STATE OF WASHINGTON

SUB CONSULTANT

PRIME CONSULTANT

IBI Group
18401 VON KARMAN AVE, SUITE 110
tel 949.833.5588 fax 949.833.5511
ibigroup.com

PROJECT

The Village at Totem Lake - Building A
Kirkland, Washington

PROJECT NO:	Building A
DRAWN BY:	Author
CHKD' BY:	Checker
SCALE:	1/4" = 1'-0"
DATE:	5/31/2016

SHEET TITLE

WINDOW SCHEDULES

BLDG	SHEET NUMBER	ISSUE
A	A9201	

C:\Users\ethan.walker\Documents\ATW_Totem_Bldg\A_2016_ethan.walker.rvt
5/31/2016 5:58:51 PM

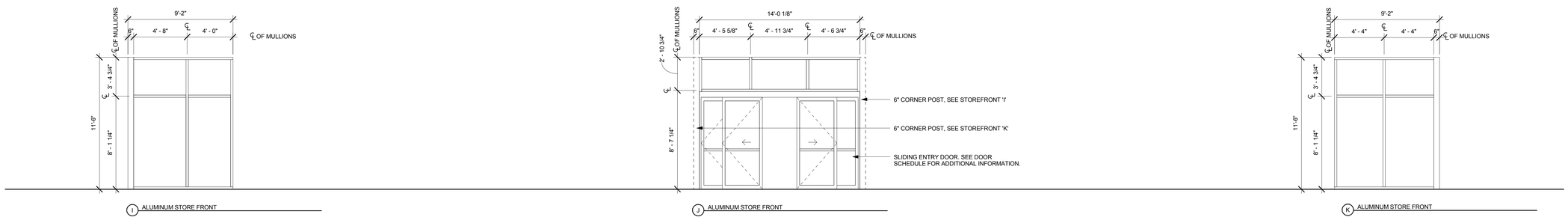

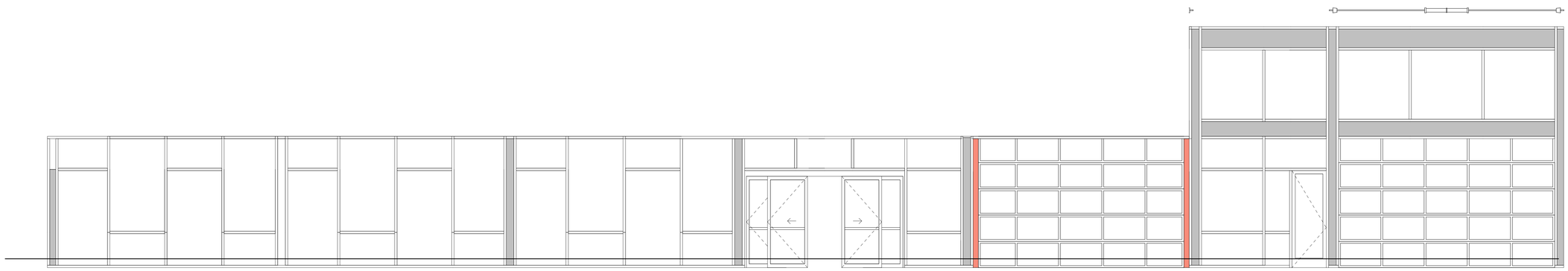

CLIENT

CENTERCAL PROPERTIES, LLC

COPYRIGHT:

Any reproduction or distribution for any purpose other than authorized by IBI Group is forbidden. Written dimensions shall have precedence over scaled dimensions. Contractors shall verify and be responsible for all dimensions and conditions on the job, and IBI Group must be informed of any variation from the dimensions and conditions shown on the drawing. Shop drawings shall be submitted to IBI Group for approval before proceeding with fabrication.

COPYRIGHT © 2016 IBI GROUP

ISSUES

NO.	ISSUANCE	STATUS	DATE
1	60% CD SET		5/31/2016

SEAL

10759 REGISTERED ARCHITECT
CRAIG ROTHENBURGER
STATE OF WASHINGTON

SUB CONSULTANT

PRIME CONSULTANT

IBI Group
18401 VON KARMAN AVE, SUITE 110
tel 949.833.5588 fax 949.833.5511
ibigroup.com

PROJECT

The Village at Totem Lake - Building A
Kirkland, Washington

PROJECT NO:	Building A
DRAWN BY:	Author
CHKD' BY:	Checker
SCALE:	1/4" = 1'-0"
DATE:	5/31/2016

SHEET TITLE

WINDOW SCHEDULES

BLDG	SHEET NUMBER	ISSUE
A	A9202	

5/31/2016 5:58:52 PM C:\Users\ethan.walker\Documents\ATV_Totem_Bldg'A_A_2016_ethan.walker.rvt

GENERAL

1. THE PROJECT SPECIFICATIONS FORM A PART OF THESE GENERAL NOTES.

2. THE CONTRACTOR SHALL VERIFY ALL DIMENSIONS PRIOR TO CONSTRUCTION. THE OWNER'S REPRESENTATIVE SHALL BE NOTIFIED OF ANY DISCREPANCIES OR INCONSISTENCIES.

3. INFORMATION SHOWN ON THE DRAWINGS RELATED TO EXISTING CONDITIONS REPRESENTS THE PRESENT KNOWLEDGE, BUT WITHOUT GUARANTEE OF ACCURACY. REPORT CONDITIONS THAT CONFLICT WITH THE CONTRACT DOCUMENTS TO THE OWNER'S REPRESENTATIVE. DO NOT DEVIATE FROM THE CONTRACT DOCUMENTS WITHOUT WRITTEN DIRECTION FROM THE OWNER'S REPRESENTATIVE.

4. DIMENSIONS SHALL TAKE PRECEDENCE OVER SCALED DRAWINGS. DRAWINGS SHALL NOT BE SCALED.

5. DETAILS IN SHEETS TITLED 'TYPICAL DETAILS', TYPICAL DETAILS AND GENERAL NOTES APPLY TO ALL PARTS OF THE WORK, EXCEPT WHERE SPECIFICALLY DETAILED OR UNLESS NOTED OTHERWISE. THESE DETAILS ARE NOT SPECIFICALLY REFERENCED WHERE THEY OCCUR.

6. NOTES AND DETAILS ON DRAWINGS SHALL TAKE PRECEDENCE OVER GENERAL NOTES AND TYPICAL DETAILS. WHERE NOTES AND DETAILS ON DRAWINGS AND THESE GENERAL NOTES AND TYPICAL DETAILS ARE IN CONFLICT WITH THE PROJECT SPECIFICATIONS THE MOST STRINGENT SHALL APPLY. CONDITIONS NOT SPECIFICALLY SHOWN SHALL BE CONSTRUCTED AS SHOWN FOR SIMILAR WORK.

7. ALL WORK SHALL CONFORM TO THE STANDARDS OF THE FOLLOWING:

   INTERNATIONAL BUILDING CODE, 2012 EDITION WITH ALL CITY OF KIRKLAND AMENDMENTS AND ANY OTHER REGULATING AGENCIES WHICH HAVE AUTHORITY OVER ANY PORTION OF THE WORK, INCLUDING BUT NOT LIMITED TO OSHA, DIVISION OF OCCUPATIONAL SAFETY AND HEALTH, AND THOSE CODES AND STANDARDS LISTED IN THE CONTRACT DOCUMENTS.

8. SPECIFICATIONS, CODES, AND STANDARDS NOTED IN THE CONTRACT DOCUMENTS SHALL BE OF THE LATEST APPROVED ISSUE, INCLUDING SUPPLEMENTS, UNLESS OTHERWISE NOTED. MATERIAL SPECIFICATIONS SHALL COMPLY WITH ASTM REFERENCED STANDARDS LATEST EDITION.

9. MANUFACTURED MATERIALS SHALL BE APPROVED BY THE CHECKING AGENCY PRIOR TO THEIR USE. ALL REQUIREMENTS OF THOSE APPROVALS SHALL BE FOLLOWED

10. SEE ARCHITECTURAL DRAWINGS FOR THE FOLLOWING:
    A. SIZE AND LOCATION OF ALL DOOR AND WINDOW OPENINGS.
    B. SIZE AND LOCATION OF ALL NON-BEARING PARTITIONS.
    C. SIZE AND LOCATION OF ALL CONCRETE CURBS, FLOOR DRAINS, SLOPES, DEPRESSED AREAS, CHANGES IN LEVEL, CHAMFERS, GROOVES, INSERTS, ETC.
    D. EXTERIOR WALL SYSTEM.
    E. SIZE AND LOCATION OF ALL FLOOR AND ROOF OPENINGS.
    F. DIMENSIONS NOT SHOWN ON STRUCTURAL DRAWINGS.

11. SEE MECHANICAL, PLUMBING AND ELECTRICAL DRAWINGS FOR THE FOLLOWING:
    A. PIPE RUNS, SLEEVES, HANGERS, TRENCHES, WALL, ROOF AND FLOOR OPENINGS, ETC., NOT SHOWN OR NOTED.
    B. ELECTRICAL CONDUIT RUNS, BOXES, OUTLETS IN WALLS AND SLABS.
    C. ANCHORAGE AND BRACING FOR ELECTRICAL, MECHANICAL OR PLUMBING EQUIPMENT TO THE STRUCTURE.
    D. ANCHOR BOLTS FOR EQUIPMENT MOUNTS.
    E. SIZE, WEIGHT, AND LOCATION OF MACHINE AND EQUIPMENT BASES.

12. OPENINGS, POCKETS, ETC. SHALL NOT BE PLACED IN STRUCTURAL MEMBERS UNLESS SPECIFICALLY DETAILED ON THE STRUCTURAL DRAWINGS. NOTIFY THE STRUCTURAL ENGINEER OF RECORD WHEN DRAWINGS BY OTHERS SHOW OPENINGS, POCKETS, ETC., NOT SHOWN ON THE STRUCTURAL DRAWINGS, BUT WHICH ARE LOCATED IN STRUCTURAL MEMBERS.

13. HANDRAILS, CLADDING SYSTEMS, METAL STUD FRAMING, MEP EQUIPMENT AND PIPING, ANCHORAGE/BRACING AND ANY OTHER DESIGN-BUILD ELEMENTS, WHEN NOT SPECIFICALLY DETAILED ON THE STRUCTURAL DRAWINGS, SHALL BE THE DESIGN RESPONSIBILITY OF THE CONTRACTOR AND MAY BE SUPPORTED BY THE PRIMARY STRUCTURE. CONTRACTOR SHALL PROVIDE AND INSTALL ALL ANCILLARY MEMBERS INCLUDING BUT NOT LIMITED TO BEAMS, COLUMNS, POSTS, FOOTINGS, STIFFENERS, GUSSETS, KICKERS, BRACES, ETC., AND THE ATTENDANT CONNECTIONS, AS REQUIRED BY THE STRUCTURAL ENGINEER OF RECORD, TO SUPPORT LOADS IMPOSED BY THE STAIR FRAMING AND DESIGN-BUILD ELEMENTS ON THE PRIMARY STRUCTURE. DESIGN AND DETAILING OF THESE ELEMENTS SHALL BE DEVELOPED AND STAMPED BY A LICENSED STRUCTURAL ENGINEER IN THE STATE OF WASHINGTON. CONTRACTOR SHALL SUBMIT THE CALCULATIONS, DRAWINGS AND DESIGN TO THE STRUCTURAL ENGINEER OF RECORD FOR REVIEW AND TO THE GOVERNING AGENCY FOR PERMITTING AND APPROVAL PRIOR TO STARTING FABRICATION CONTRACTOR SHALL OBTAIN ALL PERTINENT PERMITS PRIOR TO STARTING FABRICATION. DESIGN-BUILD ELEMENTS SHALL BE DESIGNED TO AVOID TORSIONAL LOADS INTO THE PRIMARY STRUCTURE.

14. CONTRACTOR SHALL CAREFULLY REVIEW THE DRAWINGS TO IDENTIFY THE EXTENT OF THE SCOPE OF WORK. VISIT THE SITE TO RELATE THE SCOPE OF WORK TO EXISTING CONDITIONS AND DETERMINE THE EXTENT TO WHICH THOSE CONDITIONS AND PHYSICAL SURROUNDINGS WILL IMPACT THE WORK.

15. THE CONTRACTOR SHALL RESOLVE ANY CONFLICTS ON THE CONSTRUCTION DOCUMENTS WITH THE OWNER'S REPRESENTATIVE BEFORE PROCEEDING WITH THE WORK.

16. UNLESS NOTED OTHERWISE, COLUMNS, WALLS, BEAMS, FOOTINGS, ETC, ARE CENTERED AT GRIDLINES. WHERE BEAM TO BEAM SPACING IS NOT SHOWN, BEAM SHALL BE EQUALLY SPACED BETWEEN GRIDLINES.

17. ANY DEVIATION FROM THE APPROVED SET OF STRUCTURAL DRAWINGS SHALL BE SUBMITTED TO THE OWNER'S REPRESENTATIVE FOR REVIEW/APPROVAL BEFORE PROCEEDING WITH THE WORK. SUBSTITUTIONS OF PRODUCTS OR MATERIALS SPECIFIED ON THE CONSTRUCTION DOCUMENTS ARE NOT ALLOWED.

18. THE CONTRACT DOCUMENTS REPRESENT THE FINISHED STRUCTURE. THEY DO NOT INDICATE THE METHOD OF CONSTRUCTION. THE CONTRACTOR SHALL PROVIDE MEANS, METHOD, TECHNIQUES, SEQUENCE AND PROCEDURE OF CONSTRUCTION AS REQUIRED. SITE VISITS PERFORMED BY THE OWNER'S REPRESENTATIVE DO NOT INCLUDE INSPECTIONS OF MEANS AND METHODS OF CONSTRUCTION PERFORMED BY CONTRACTOR.

19. THE CONTRACTOR SHALL PROVIDE ALL NECESSARY SHORES, BRACES AND GUYS REQUIRED TO SUPPORT ALL LOADS TO WHICH THE BUILDING STRUCTURE AND COMPONENTS, SOILS, OTHER STRUCTURES AND UTILITIES MAY BE SUBJECTED DURING CONSTRUCTION. SHORING SYSTEMS SHALL BE DESIGNED AND STAMPED BY A CIVIL OR STRUCTURAL ENGINEER LICENSED IN THE STATE OF WASHINGTON. VISITS TO THE SITE BY THE SEOR WILL NOT INCLUDE OBSERVATION OF THE ABOVE NOTED ITEMS.

20. CONSTRUCTION MATERIALS SHALL BE SPREAD OUT IF PLACED ON FRAMED FLOORS OR ROOFS. LOAD SHALL NOT EXCEED THE DESIGN LIVE LOAD PER SQUARE FOOT SPECIFIED ON THIS SET OF DRAWINGS. PROVIDE ADEQUATE SHORING AND/OR BRACING WHERE STRUCTURE HAS NOT ATTAINED DESIGN STRENGTH OR WHERE OVERLOAD IS ANTICIPATED.

GENERAL CONTINUED

21. STRUCTURAL OBSERVATIONS PERFORMED BY THE STRUCTURAL ENGINEER DURING CONSTRUCTION ARE NOT THE REQUIRED CONTINUOUS AND SPECIAL INSPECTION SERVICES AND DO NOT WAIVE THE RESPONSIBILITY FOR THE INSPECTIONS REQUIRED OF THE BUILDING INSPECTOR OR THE DEPUTY INSPECTOR. OBSERVATIONS ALSO DO NOT GUARANTEE CONTRACTOR'S PERFORMANCE AND SHALL NOT BE CONSIDERED AS SUPERVISION OF CONSTRUCTION.

22. CONTRACTOR SHALL REVIEW SHOP DRAWINGS FOR COMPLETENESS AND COMPLIANCE WITH CONTRACT DOCUMENTS AND SHALL STAMP SHOP DRAWINGS PRIOR TO SUBMISSION TO THE OWNER'S REPRESENTATIVE.

23. ARCHITECT'S / ENGINEER'S REVIEW OF THE SHOP DRAWINGS SHALL NOT BE CONSTRUED AS AN AUTHORIZATION TO DEVIATE FROM CONTRACT DOCUMENTS.

24. SHOP DRAWINGS WILL NOT BE PROCESSED DUE TO INCOMPLETENESS, LACK OF COORDINATION WITH RELEVANT PORTION OF CONTRACT DOCUMENTS, LACK OF CALCULATIONS IF REQUIRED AND WHERE DEVIATIONS, MODIFICATIONS AND SUBSTITUTIONS ARE INDICATED WITHOUT PRIOR WRITTEN APPROVAL FROM THE OWNER'S REPRESENTATIVE.

25. ALLOW SEVEN WORKING DAYS FOR PROCESSING SHOP DRAWINGS OTHER THAN STRUCTURAL STEEL & DESIGN-BUILD ITEMS AFTER RECEIPT BY THE STRUCTURAL ENGINEER. ALLOW FOURTEEN WORKING DAYS FOR PROCESSING STRUCTURAL STEEL & DESIGN-BUILD ITEMS SHOP DRAWINGS. SHOP DRAWINGS AND SUBMITTALS WILL BE REVIEWED A MAXIMUM OF TWO TIMES.

26. THE LATERAL SYSTEM OF THE STRUCTURE IS DESIGNED WITH LATERAL RESTRAINT AT THE GROUND FLOOR. STRUCTURAL FRAMES ARE NOT LATERALLY SELF SUPPORTING UNTIL THE ENTIRE DESIGN LATERAL RESTRAINT FLOOR AND STRUCTURAL WALLS BELOW ARE IN PLACE.

27. DO NOT SPLICE STRUCTURAL MEMBERS UNLESS SPECIFICALLY DETAILED AN INDICATED IN THIS SET OF DRAWINGS. DO NOT PLACE OPENINGS, POCKETS, ETC. IN STRUCTURAL MEMBERS UNLESS SPECIFICALLY DETAILED AND INDICATED IN THIS SET OF STRUCTURAL DRAWINGS. NOTIFY THE STRUCTURAL ENGINEER IF DRAWINGS BY OTHERS REQUIRE MODIFICATIONS TO STRUCTURAL MEMBERS AS SHOWN IN THIS SET OF STRUCTURAL DRAWINGS PRIOR TO PROCEEDING WITH THE WORK.

28. SAFETY MEASURES: CONTRACTOR AGREES THAT HE SHALL ASSUME SOLE AND COMPLETE RESPONSIBILITY FOR JOB SITE CONDITIONS DURING THE COURSE OF CONSTRUCTION OF THIS PROJECT, INCLUDING SAFETY OF ALL PERSONS AND PROPERTY, AND FOR ALL NECESSARY INDEPENDENT ENGINEERING REVIEWS OF THESE CONDITIONS, REQUIREMENTS SHALL APPLY CONTINUOUSLY AND NOT BE LIMITED TO NORMAL WORKING HOURS.

29. CONTRACTOR ACKNOWLEDGES THAT HE HAS THOROUGHLY FAMILIARIZED HIMSELF WITH THE BUILDING SITE CONDITIONS, GRADES, ETC., WITH THE DRAWINGS AND SPECIFICATIONS, WITH THE DELIVERY FACULTIES AND ALL OTHER MATTERS AND CONDITIONS WHICH MAY AFFECT THE OPERATION AND COMPLETION OF THE WORK AND ASSUMES ALL RISKS THEREFROM.

30. CONTRACTOR SHALL SUBMIT THE FOLLOWING DOCUMENTS TO THE BUILDING DEPARTMENT OR THEIR RECORD:

    A. FASTENER INSTALLATION PROCEDURES
    B. WELDING PROCEDURES AND SPECIFICATIONS
    C. WELDING PERFORMANCE QUALIFICATION RECORDS
    D. INSPECTOR QUALIFICATIONS
    E. CONTRACTOR'S QUALITY CONTROL PLAN

31. STANDARD TOLERANCES SHALL BE BASED ON THE REQUIREMENTS OF THE AISC CODE OF STANDARD PRACTICE AND ACI 117, STANDARD SPECIFICATIONS FOR TOLERANCE FOR CONCRETE CONSTRUCTION AND MATERIALS.

32. DESIGN LOADS:

    A. DEAD LOADS: CONSIST OF BUILDING SELF-WEIGHT PLUS SUPERIMPOSED DEAD LOADS. REFER TO COMPLETE SET OF DRAWINGS FOR DETERMINING DEAD LOADS

    B. LIVE LOADS:

AREA	DESIGN LIVE LOAD	REMARK
OFFICE FLOOR	50 PSF + 15 PSF PARTITIONS	REDUCIBLE
CORRIDORS	80 PSF + 15 PSF PARTITIONS	REDUCIBLE
MECH AND ELEC ROOMS	100 PSF (OR ACTUAL WEIGHT IF HEAVIER)	UNREDUCIBLE
STAIRS,EXITS	100 PSF	UNREDUCIBLE
LIGHT STORAGE	125 PSF	UNREDUCIBLE
ROOF	25 PSF	SNOW

    C. SEISMIC DESIGN LOADS:

S_S	= 1.254
S_1	= 0.483
S_{DS}	= 0.836
S_{D1}	= 0.489
SITE CLASS	= D
RESPONSE MODIFICATION FACTOR, R	= 3.25
DISPLACEMENT AMPLIFICATION FACTOR, C_d	= 3.25
OVERSTRENGTH FACTOR, Ω_0	= 2.0
SEISMIC RESPONSE COEFFICIENT, C_S	= 0.257 (ULTIMATE)
SEISMIC DESIGN CATEGORY	= D
RISK CATEGORY	= II
SEISMIC IMPORTANCE FACTOR I_e	= 1.0
ANALYSIS PROCEDURE USED	= MODEL RESPONSE SPECTRUM ANALYSIS
SEISMIC BASE SHEAR (APPROXIMATE)	= 350 K (ULTIMATE)(85% OF CS)

    D. WIND DESIGN LOADS:

BASIC WIND SPEED (3 SEC. GUST)	= 110 MPH
WIND IMPORTANCE FACTOR, I_w	= 1.0
EXPOSURE TYPE	= C
RISK CATEGORY	= II

    E. SNOW DESIGN LOADS:

ROOF SNOW LOAD	= 25 PSF

STRUCTURAL OBSERVATION

1. PERIODIC STRUCTURAL OBSERVATION WILL BE PROVIDED BY JOHN A. MARTIN & ASSOCIATES INC., STRUCTURAL ENGINEERS, PER SECTION 1704 OF THE INTERNATIONAL BUILDING CODE AND ALL APPLICABLE AMENDMENTS, FOR THE WORK INDICATED BELOW. CONTRACTOR SHALL NOTIFY ENGINEER 72 HOURS BEFORE REQUIRED OBSERVATIONS. DELINQUENT NOTIFICATION MAY REQUIRE DEMOLITION OF COVERING MATERIAL TO FACILITATE OBSERVATION.
   - PLACING OF CONCRETE
   - PLACING OF REINFORCING
   - PLACING OF STRUCTURAL STEEL
   - PLACING OF METAL DECK
   - PLACING OF MASONRY
   - PLACING OF ANCHOR BOLTS

2. STRUCTURAL OBSERVATIONS PERFORMED BY JOHN A. MARTIN & ASSOCIATES CONSIST ON THE VISUAL OBSERVATION OF THE MAJOR ELEMENTS AND CONNECTIONS OF THE STRUCTURAL SYSTEM AT SIGNIFICANT CONSTRUCTION STAGES AND THE COMPLETED STRUCTURE FOR GENERAL CONFORMANCE TO THE APPROVED PLANS AND SPECIFICATIONS. STRUCTURAL OBSERVATION DOES NOT WAIVE THE REQUIREMENT/RESPONSIBILITY FOR THE INSPECTIONS REQUIRED OF THE BUILDING INSPECTOR OR THE SPECIAL INSPECTOR.
3. THE ENGINEER OF RECORD SHALL DEVELOP ALL CHANGES RELATING TO THE STRUCTURAL SYSTEMS. THE BUILDING DEPARTMENT SHALL REVIEW AND APPROVE ALL CHANGES TO THE APPROVED PLANS AND SPECIFICATIONS.

FOUNDATIONS AND SITE WORK

1. THE DESIGN OF THE FOUNDATION SYSTEM IS BASED UPON THE CRITERIA AND RECOMMENDATIONS CONTAINED IN THE GEOTECHNICAL INVESTIGATION REPORT BY GEODESIGN INC., DATED MARCH 2, 2015 AND ALL SUBSEQUENT ADDENDA. COPIES ARE AVAILABLE FOR REVIEW AT THE ARCHITECT'S OFFICE.
2. FOOTING DESIGN BASED ON ALLOWABLE SOIL PRESSURE OF 5000 PSF. FOR DEAD AND LIVE LOADS, AND 7500 PSF. FOR SHORT TERM LOADS INCLUDING WIND OR SEISMIC LOADS. BOTTOM OF FOOTINGS TO BE A MINIMUM OF 1'-6" BELOW LOWEST ADJACENT FINISHED FLOOR OR GRADE. SEE GEOTECH REPORT FOR SOIL REMEDIATION INCLUDING GEOPIERS OR RIGID INCLUSIONS.
3. THE GEOTECHNICAL INVESTIGATION REPORT AND ITS RECOMMENDATIONS SHALL BE FOLLOWED AND SHALL BE CONSIDERED MINIMUM REQUIREMENTS UNLESS MORE STRINGENT REQUIREMENTS ARE PRESENTED IN THE CONSTRUCTION DOCUMENTS.
4. THE CONTRACTOR IS SOLELY RESPONSIBLE FOR EXCAVATION PROCEDURES INCLUDING LAGGING, SHORING, UNDERPINNING AND PROTECTION OF EXISTING CONSTRUCTION.
5. CONTRACTOR SHALL PROVIDE DE-WATERING OF EXCAVATIONS FROM SURFACE WATER, GROUND WATER OR SEEPAGE. REMOVE LOOSE SOIL AND STANDING WATER FROM FOUNDATION EXCAVATIONS PRIOR TO PLACING CONCRETE.
6. EXCAVATION AND COMPACTING IF REQUIRED SHALL BE APPROVED BY THE GOVERNING AGENCY AND THE GEOTECHNICAL ENGINEER PRIOR TO PLACING THE CONCRETE AND REINFORCING. THE GEOTECHNICAL ENGINEER SHALL SUBMIT LETTER OF COMPLIANCE TO THE OWNER'S REPRESENTATIVE.
7. ALL EXCAVATIONS SHALL BE PROPERLY BACKFILLED. DO NOT PLACE BACKFILL BEHIND RETAINING WALLS BEFORE WALLS HAVE ATTAINED FULL DESIGN STRENGTH CONTRACTOR SHALL BRACE OR PROTECT ALL BUILDING AND PIT WALLS BELOW GRADE FROM LATERAL LOADS UNTIL ATTACHING FLOORS ARE COMPLETELY IN PLACE AND HAVE ATTAINED FULL STRENGTH. CONTRACTOR SHALL PROVIDE FOR DESIGN, PERMITS AND INSTALLATION OF SUCH BRACING.
8. FOOTINGS SHALL BE PLACED AND ESTIMATED ACCORDING TO DEPTHS SHOWN ON DRAWINGS. SHOULD SOIL ENCOUNTERED AT THESE DEPTHS NOT BE APPROVED BY THE FOUNDATION ENGINEER, FOOTING ELEVATIONS SHALL BE ALTERED AS REQUIRED.
9. FOOTING BACKFILL AND UTILITY TRENCH BACKFILL WITHIN BUILDING AREA SHALL BE MECHANICALLY COMPACTED IN LAYERS IN ACCORDANCE WITH SOIL REPORT. FLOODING IS NOT BE PERMITTED.
10. LOCATE AND PROTECT EXISTING UTILITIES TO REMAIN DURING AND/OR AFTER CONSTRUCTION.
11. ALL ABANDONED FOOTINGS, UTILITIES, ETC., THAT INTERFERE WITH NEW CONSTRUCTION SHALL BE REMOVED. EXCEPT THAT THE EXISTING TIMBER PILES SHALL REMAIN IN PLACE WITH TOP 6 FEET REMOVED.
12. ALL EARTHWORK SHALL BE DONE IN ACCORDANCE WITH SOILS REPORT RECOMMENDATIONS.

DEFERRED DESIGN APPROVAL ITEMS AND REQUIREMENTS

1. THE GENERAL CONTRACTOR SHALL PREPARE PLANS, DETAILS, AND CALCULATIONS FOR ALL "DEFERRED DESIGN APPROVAL" ITEMS (SEE NOTE 4) TO THE BUILDING DEPARTMENT, THE ARCHITECT, AND THE STRUCTURAL ENGINEER, FOR REVIEW AND/OR APPROVAL PRIOR ALL "DEFERRED DESIGN APPROVAL" TO FABRICATION.

2. SHOP DRAWINGS AND CALCULATIONS AS NECESSARY FOR "DEFERRED DESIGN APPROVAL" ITEMS SHALL BOTH BE SIGNED BY A PROFESSIONAL ENGINEER LICENSED IN WASHINGTON. THIS ENGINEER SHALL BE RESPONSIBLE FOR SUBMITTING TO, GAINING REVIEW/ACCEPTANCE FROM, AND MEETING ANY OTHER REQUIREMENTS OF THE BUILDING DEPARTMENT AND THE ARCHITECT.

3. STRUCTURAL BEAMS, GIRDERS, AND COLUMNS HAVE NOT BEEN DESIGNED FOR ANY ECCENTRIC OR TORSIONAL LOADS UNLESS SPECIFICALLY NOTED ON PLAN, THEREFORE IT IS THE RESPONSIBILITY OF THE CONTRACTOR TO DESIGN AND PROVIDE CONNECTIONS AND RELATED ELEMENTS (SUCH AS KICKERS) IN A MANNER THAT LOADS THE BASE BUILDING STRUCTURAL ELEMENTS CONCENTRICALLY.

4. "DEFERRED DESIGN APPROVAL "ITEMS/ELEMENTS (AS DESCRIBED BELOW) SHALL BE DESIGNED BY OTHERS, AND THE GENERAL CONTRACTOR SHALL COORDINATE WITH ALL OTHER TRADES AND THE ARCHITECT. JOHN A. MARTIN & ASSOCIATES, INC. HAS NOT DESIGNED ANY OF THESE "DEFFERED DESIGN APPROVAL" ITEMS. DESIGN SHALL INCLUDE THE DESIGN OF THE ELEMENTS AND THEIR CONNECTIONS TO THE BASE BUILDING STRUCTURE. "DEFERRED DESIGN APPROVAL" ITEMS ON THIS PROJECT ARE AS FOLLOWS:

   A. ALL CURTAIN WALL, WINDOW, LOUVER, AND GLAZING SYSTEMS.

   B. ALL HANDRAILS, GUARDRAILS, STAIR FRAMING, LANDINGS, AND ANY RELATED SUPPORT THAT IS NOT SPECIFICALLY SHOWN AND DETAILED ON THE STRUCTURAL DRAWINGS.

   C. SUPPORTS AND CONNECTIONS FOR PIPES, SPRINKLER, AND WASTE LINES, DUCTS, CONDUITS, SUSPENDED CEILINGS, LIGHTS, MECHANICAL AND ELECTRICAL EQUIPMENT, INCLUDING EQUIPMENT PEDESTAL FRAMING TO HOLD EQUIPMENT ABOVE STRUCTURAL DECKS AND EQUIPMENT ANCHORAGE TO THE BASE BUILDING STRUCTURE.

   D. SUPPORTS AND CONNECTIONS FOR METAL STUD FRAMING, SOFFITS, AND ANY OTHER ARCHITECTURAL ELEMENTS SUPPORTED BY METAL STUDS.

   E. ANY STRUCTURE THAT IS NOT SHOWN ON THE STRUCTURAL DRAWINGS BUT IS REQUIRED BY OTHER DISCIPLINES, SUCH AS ARCHITECTURAL, MECHANICAL, ELECTRICAL, LANDSCAPE, ETC.

   F. ELEVATORS, INCLUDING ELEVATOR MACHINE BEAMS, GUIDERAILS, AND THEIT ASSOCIATED CONNECTIONS.

   G. METAL GRATING NOT CALLED OUT ON PLANS.

   H. WINDOW WASHING SYSTEMS AS SPECIFIED ON DRAWINGS BY OTHERS.

5. DOCUMENTS FOR "DEFERRED DESIGN APPROVAL" ITEMS SHALL BE SUBMITTED TO THE ARCHITECT AND BASE BUILDING ENGINEER OF RECORD, WHO SHALL REVIEW THEM AND STAMP THEM WITH A NOTE INDICATING THE DEFERRED APPROVAL SUBMITTAL DOCUMENTS HAVE BEEN REVIEWED AND FOUND TO BE IN CONFORMANCE WITH THE DESIGN CONCEPT OF THE PROJECT AND IN GENERAL COMPLIANCE WITH THE INFORMATION GIVEN IN THE CONTRACT DOCUMENTS. THE BASE BUILDING STRUCTURAL ENGINEER SHALL REVIEW THE DOCUMENTS AND STAMP THEM INDICATING THE DOCUMENTS HAVE BEEN REVIEWED FOR LOADS AS THEY AFFECT THE BASE BUILDING. THE CONTRACTOR SHALL BE RESPONSIBLE FOR FORWARDING THE REVIEWED SUBMITTAL DOCUMENTS TO THE BUILDING OFFICIAL. RESPONSIBILITY FOR THE DESIGN SHOWN ON THESE DOCUMENTS AND FOR OBTAINING APPROVAL FROM THE BUILDING OFFICIAL RESTS WITH THE INDIVIDUAL WHOSE PROFESSIONAL SEAL APPEARS THEREON. DEFERRED DESIGN APPROVAL ITEMS SHALL NOT BE INSTALLED UNTIL ALL NECESSARY REVIEWS AND APPROVALS HAVE BEEN OBTAINED FROM THE DESIGN TEAM AND THE BUILDING OFFICIAL.

CONCRETE

1. ALL CONCRETE IS REINFORCED AND CAST_IN_PLACE UNLESS OTHERWISE NOTED.
2. ALL PHASES OF WORK PERTAINING TO THE CONCRETE CONSTRUCTION SHALL CONFORM TO THE 'BUILDING CODE REQUIREMENTS FOR REINFORCED CONCRETE, ACI 318, WITH MODIFICATIONS AS NOTED IN THE CONTRACT DOCUMENTS.
3. CONCRETE MIXING OPERATION, ETC., SHALL CONFORM TO C-94.
4. PLACEMENT OF CONCRETE SHALL CONFORM TO ACI 304 AND CONTRACT DOCUMENTS.
5. ALL STRUCTURAL CONCRETE SHALL HAVE A MINIMUM COMPRESSIVE STRENGTH AT 28 DAYS AS FOLLOWS:

LOCATION	STRENGTH	TYPE OF CONCRETE
FILL ON METAL DECK	3000 PSI	NORMAL WEIGHT
SLAB ON GRADE	4000 PSI	NORMAL WEIGHT
ALL OTHER CONCRETE	4000 PSI	NORMAL WEIGHT

6. NO MORE THAN ONE GRADE OF CONCRETE SHALL BE ON THE JOB SITE AT ANY ONE TIME.
7. PORTLAND CEMENT SHALL CONFORM TO ASTM C-150, TYPE I OR TYPE II, LOW ALKALI.
8. CONCRETE MIXES SHALL BE DESIGNED BY AN APPROVED LABORATORY. THE DESIGN SHALL BE STAMPED BY A CIVIL OR STRUCTURAL ENGINEER LICENSED IN THE STATE OF WASHINGTON AND SUBMITTED TO THE OWNER'S REPRESENTATIVE FOR REVIEW AND APPROVAL. ADMIXTURES CONTAINING CALCIUM CHLORIDE ARE NOT ALLOWED.
9. NORMAL WEIGHT CONCRETE AGGREGATES SHALL CONFORM TO ASTM C-33.
10. GROUT SHALL BE AN APPROVED NONSHRINK CEMENTIOUS GROUT CONTAINING NATURAL AGGREGATES DELIVERED TO THE JOB SITE IN FACTORY PREPACKAGED CONTAINERS REQUIRING ONLY THE ADDITION OF WATER. THE MINIMUM 28-DAY COMPRESSIVE STRENGTH SHALL BE AT LEAST 1,000 PSI HIGHER THAN THE SUPPORTING CONCRETE STRENGTH, UNLESS OTHERWISE NOTED. APPROVED GROUTS INCLUDE: CHEM REX INC'S "MASTER FLOW 928" SIKA CORPORATION'S "SIKAGROUT 212HP", BURKE COMPANY'S "NONFERROUS NON SHRINK GROUT", OR APPROVED EQUAL. GROUT SHALL BE MIXED APPLIED, AND CURED STRICTLY IN ACCORDANCE WITH THE MANUFACTURER'S PRINTED INSTRUCTIONS.
11. THE CONCRETE SLAB THICKNESS SHALL BE UNIFORM UNLESS OTHERWISE SHOWN.
12. THOROUGHLY CLEAN AND ROUGHEN ALL EXISTING CONCRETE, CONCRETE PREVIOUSLY POURED AND HARDENED AND MASONRY SURFACES TO RECEIVE NEW CONCRETE. INTERFACE SHALL BE ROUGHENED TO A FULL AMPLITUDE OF 1/4" UNLESS NOTED OTHERWISE.
13. THE FOLLOWING MINIMUM CONCRETE COVER SHALL BE PROVIDED FOR REINFORCEMENT PLACED IN CAST-IN-PLACE CONCRETE:

A. CONCRETE CAST AGAINST AND PERMANENTLY EXPOSED TO EARTH	3"
B. FORMED CONCRETE EXPOSED TO EARTH OR WEATHER:	
#5 BAR, W31 OR D31 WIRE, AND SMALLER	1 1/2"
#6 THROUGH # 18 BARS	2"
C. CONCRETE NOT EXPOSED TO WEATHER OR IN CONTACT WITH GROUND:	
SLABS, WALLS AND JOISTS:	
#11 BAR AND SMALLER	1"
#14 AND #18 BARS	1 1/2"
BEAMS, COLUMNS AND WALL JAMBS:	
PRIMARY REINFORCEMENT, TIES, STIRRUPS, AND SPIRALS:	
#3 THROUGH #11	1 1/2"
#14 AND #18 BARS	2 1/2"

14. ALL REINFORCING BARS, ANCHOR BOLTS AND OTHER CONCRETE INSERTS SHALL BE WELL SECURED IN POSITION PRIOR TO PLACING CONCRETE.
15. PROVIDE SLEEVES FOR PLUMBING AND ELECTRICAL OPENINGS IN CONCRETE BEFORE PLACING. DO NOT CUT ANY REINFORCING WHICH MAY CONFLICT. CORING IN CONCRETE IS NOT PERMITTED EXCEPT AS SHOWN. NOTIFY THE STRUCTURAL ENGINEER IN ADVANCE OF CONDITIONS NOT SHOWN ON THE DRAWINGS.
16. CONDUIT OR PIPE SIZE (O.D.) SHALL NOT EXCEED ONE THIRD OF SLAB THICKNESS AND SHALL BE PLACED BETWEEN THE TOP AND BOTTOM REINFORCING, UNLESS SPECIFICALLY DETAILED OTHERWISE. CONCENTRATIONS OF CONDUITS OR PIPES SHALL BE AVOIDED EXCEPT WHERE DETAILED OPENINGS ARE PROVIDED.
17. PROJECTING CORNERS OF BEAMS, WALLS, COLUMNS, ETC., SHALL BE FORMED WITH A 3/4 IN. CHAMFER, UNLESS OTHERWISE NOTED ON ARCHITECTURAL DRAWINGS.
18. CURING COMPOUNDS USED ON CONCRETE TO RECEIVE A FINISH SHALL BE APPROVED BY THE FINISH APPLICATOR BEFORE USE.
19. THE MAXIMUM SIZE OF A SINGLE POUR FOR ANY DAY FOR ELEVATED SLABS SHALL NOT EXCEED 20,000 SQUARE FEET, AND THE RATIO OF LENGTH TO WIDTH OF THE POUR SHALL NOT EXCEED 2 TO 1 WITHOUT THE APPROVAL OF THE OWNER'S REPRESENTATIVE.

REINFORCING STEEL

1. ALL REINFORCING STEEL SHALL BE DETAILED AND PLACED IN CONFORMANCE WITH THE 'BUILDING CODE REQUIREMENTS FOR REINFORCED CONCRETE' (ACI 318) AND THE 'MANUAL OF STANDARD PRACTICE FOR REINFORCED CONCRETE CONSTRUCTION' BY THE C.R.S.I. AND THE W.C.R.S.I., OR AS MODIFIED BY THE CONSTRUCTION DOCUMENTS.

2. ALL REINFORCING STEEL SHALL BE ASTM A615 GR 60, TYPICAL UNO. ASTM A706 GR 60 MAY BE USED AS ALTERNATE TO ASTM A615. WELDED REINFORCING, IF USED, SHALL BE ASTM A 706 OR 60.

3. MECHANICAL COUPLERS: LENTON THREADED COUPLERS BY ERICO, ICC #3967, XTENDER BY HEADED REINFORCEMENT CORPORATION, ICC #2764 OR BAR-LOCK BY DAYTON SUPERIOR CORP, ICC #2495. COUPLERS FOR BEAM AND SLAB BARS AT FORMED CONSTRUCTION JOINTS MAY BE LENTON FORM SAVERS BY ERICO, ICC #3967.

4. WELDING OF REINFORCEMENT SHALL BE WITH LOW HYDROGEN E90XX ELECTRODES FOR WELDING ASTM A615 BARS AND E80XX ELECTRODES FOR WELDING ASTM A706 BARS. ALL WELDING SHALL BE IN CONFORMANCE WITH AMERICAN WELDING SOCIETY, AWS-D1.4. ONLY WELDERS SPECIFICALLY CERTIFIED FOR REINFORCING STEEL AND IN ACCORDANCE WITH AWS D1.4 SHALL PERFORM WELDING OF REINFORCING STEEL.

5. ALL REINFORCING BAR BENDS SHALL BE MADE COLD.

6. REINFORCING SPLICES SHALL ONLY BE MADE AS INDICATED ON THE DRAWINGS.

7. DOWELS BETWEEN FOOTINGS AND WALLS OR COLUMNS SHALL BE THE SAME GRADE, SIZE AND SPACING AS THE VERTICAL REINFORCING, RESPECTIVELY, UNLESS NOTED OTHERWISE.

8. DOWELS BETWEEN SLABS AND WALLS OR COLUMNS SHALL BE THE SAME GRADE, SIZE AND SPACING AS THE VERTICAL REINFORCING, RESPECTIVELY, UNLESS NOTED OTHERWISE.

9. ALL BARS SHALL BE MARKED SO THEIR IDENTIFICATION CAN BE MADE WHEN THE FINAL IN-PLACE INSPECTION IS MADE.

10. CONTRACTOR SHALL PROVIDE FOR AN ALLOWABLE OF 5 TONS OF REINFORCING TO BE FABRICATED AND PLACED DURING PROGRESS OF WORK AS MAY BE DIRECTED BY THE STRUCTURAL ENGINEER. THE UNUSED PORTION SHALL BE CREDITED TO THE OWNER AT THE COMPLETION OF THE CONCRETE WORK.

CLIENT

CENTERCAL PROPERTIES, LLC

COPYRIGHT:

Any reproduction or distribution for any purpose other than authorized by IBI Group is forbidden. Written dimensions shall have precedence over scaled dimensions. Contractors shall verify and be responsible for all dimensions and conditions on the job and IBI Group shall be informed of any variations from the dimensions and conditions shown on the drawing. Shop drawings shall be submitted to IBI Group for approval before proceeding with fabrication.

COPYRIGHT © 2016 IBI GROUP

ISSUES

NO.	ISSUANCE	STATUS	DATE
1	STRUCTURAL ADDENDUM 1		5/31/2016

SEAL

EXPIRES

SUB CONSULTANT

JOHN A. MARTIN & ASSOCIATES
Structural Engineers
950 S. Grand Avenue
Los Angeles, Calif. 90015
Phone (213) 483-6490
Fax (213) 483-3084
J14261

PRIME CONSULTANT

IBI GROUP
18401 Von Karman Avenue, Suite 110
Irvine, CA 92612 United States
tel +1 949 833 5588 ext 146 fax +1 949 833 5511
ibigroup.com

PROJECT

The Village at Totem Lake - Building A
Kirkland, Washington

PROJECT NO:	J14261
DRAWN BY:	BK
CHKD' BY:	JC
SCALE:	AS SHOWN
DATE:	04/27/16

SHEET TITLE

GENERAL NOTES

BLDG	SHEET NUMBER	ISSUE
A	S0001	

C:\Users\bkirton\Documents\ATW_Totem_BldgA_S_2016_bkirton.rvt
5/31/2016 2:52:55 PM

METAL DECK

1. THE STEEL DECKING SHALL BE OF TYPE AND GAUGE AS CALLED FOR ON THE DRAWINGS MANUFACTURED BY ASC PROFILES, INC., ESR-1414, VERCO MANUFACTURING COMPANY, ICC-1735 OR APPROVED EQUAL. DECKING AND ALL ACCESSORIES SHALL BE FORMED FROM STEEL SHEETS HAVING A MINIMUM YIELD STRENGTH OF 40,000 PSI FOR ROOF DECK CONFIGURATIONS AND 50,000 PSI FOR FORMLOCK DECK CONFIGURATIONS, AND CONFORMING TO ASTM A-653. THE STEEL SHALL BE ZINC-COATED CONFORMING TO ASTM A525, MINIMUMN CLASS G30. DECK UNITS SHALL BE CONTINUOUS OVER THREE OR MORE SPANS WHERE POSSIBLE.

2. MINIMUM BEARING OF DECKING ON SUPPORTS SHALL BE 2 INCHES. SHEETS SHALL BE ATTACHED TO ALL SUPPORTING STEEL MEMBERS BY WELDING AS INDICATED ON DRAWINGS AND IN ACCORDANCE WITH MANUFACTURER'S RECOMMENDATIONS. UPON COMPLETION OF ERECTION, ALL WELDS IN EXPOSED DECK AREAS SHALL HAVE TOUCH-UP, DE-SLAG, CLEAN AND PRIME WITH A ZINC RICH PRIMER. DECK WELDING SHALL BE AS NOTED ON PLANS. WHERE NO WELDING IS NOTED, THE SIDE LAP OF EACH PANEL SHALL BE FASTENED BY 1 INCH LONG FILLET WELDS AT 3 FEET ON CENTER MAXIMUM, OR BUTTON PUNCHED AT 18 INCHES ON CENTER.

3. SEE DRAWINGS FOR DETAIL OF REINFORCING OF DECK OPENINGS. SEE ARCHITECTURAL, MECHANICAL, ELECTRICAL DRAWINGS, ETC., FOR SIZE AND LOCATION F REQUIRED OPENINGS.

4. ALL WELDING OF STEEL DECK SHALL BE PERFORMED BY LIGHT GAUGE WELDERS CERTIFIED BY THE GOVERNING JURISDICTION.

5. HANGERS SUPPORTED BY METAL DECKING ONLY OR METAL DECKING WITH INSULATING FILL SHALL BE ATTACHED TO STEEL BARS, 3/8" ROUND X 12" OR 1/8" x 1 1/2" x 12" FLAT, PLACED PERPENDICULAR TO FLUTES. ONLY LIGHT DUCTWORK (12" X 16" MAX.), PIPING (1 1/2" ROUND PIPING MAX), OR CEILINGS MAY BE HUNG FROM SUCH INSTALLATIONS. HANGERS MUST BE TWO FLUTES APART WHERE THEY OCCUR ON THE SAME SPAN.

6. HANGERS SUPPORTED BY METAL DECK WITH STRUCTURAL CONCRETE FILL SHALL BE INSTALLED USING ICC APPROVED ANCHORAGE SYSTEMS. SUCH HANGERS SHALL BE USED TO SUPPORT DUCTWORK (54" X 16" MAX.), PIPING (4" ROUND MAX.), OR CEILINGS, HANGERS MUST BE AT LEAST TWO FLUTES APART ON SAME DECK SPAN. LARGER DUCTWORK AND PIPING SHALL BE SUPPORTED BY STRUCTURAL BEAMS OR COLUMNS.

7. METAL DECK AT ROOFS, EXTERIOR BALCONIES, CANOPIES OR EXPOSED TO WEATHER SHALL BE VENTED.

OPEN WEB STEEL JOISTS

1. OPEN WEB STEEL JOISTS SHALL BE ENGINEERED, FABRICATED, AND ERECTED IN ACCORDANCE WITH THE 2012 INTERNATIONAL BUILDING CODE WITH STATE OF WASHINGTON AMENDMENTS, AISC STANDARD SPECIFICATION FOR OPEN WEB STEEL JOISTS, AND THE REQUIREMENTS OF THE STEEL JOIST INSTITUTE (SJI), LATEST EDITION.

2. IN ADDITION TO BRIDGING SHOWN ON PLANS, PROVIDE JOIST BRIDGING FOR ALL JOISTS AS REQUIRED BY MANUFACTURER AND THE STEEL JOIST INSTITUTE, LATEST EDITION.

3. NO ATTACHMENT OF ANY KIND SHALL BE MADE TO THE REQUIRED BRIDGING OR JOIST WEBS FOR THE JOISTS. ATTACH TO TOP AND BOTTOM CHORDS ONLY.

4. JOIST BRIDGING SHALL BE INSTALLED PER THE LATEST SJI AND OSHA REQUIREMENTS. REFER TO THE MANUFACTURER'S ERECTION DRAWINGS FOR EXACT SIZE AND LOCATION OF BRIDGING AND BRACING.

5. WHERE STEEL JOISTS SLOPE MORE THAN ¼" PER FOOT, PROVIDE SLOPED BEARING SEATS.

6. JOIST MANUFACTURER SHALL INCLUDE COORDINATION AND DESIGN OF ALL SPECIAL JOISTS FOR ALL DEAD LOADS, LIVE LOADS, KICKER (BRACING) LOADS, AND OTHER LOADS SHOWN ON PLANS AND DETAILS. JOISTS ARE TO BE DESIGNED FOR LOADS FROM ARCHITECTURAL AND MECHANICAL COMPONENTS, INCLUDING PIPING, CONDUITS, AND NON-STRUCTURAL BRACING. COORDINATE LOCATION INCLUDING ROOF TOP MECHANICAL SCREEN POST LOCATIONS, MAGNITUDE, AND QUANTITY OF LOADS WITH ARCHITECTURAL AND MEP DRAWINGS.

7. STEEL JOISTS SHALL BE DESIGNED FOR AN ADDITIONAL 500 POUND CONCENTRATED LOAD AT ALL PANEL POINTS (A SINGLE PANEL POINT AT A TIME AT THE TOP AND BOTTOM CHORDS).

8. ALL JOIST BRIDGING AND BRACING SHALL BE LOCATED SUCH THAT THE LEADING EDGE OF ANY BRIDGING MEMBER IS AT LEAST 14" FROM THE CENTERLINE OF ALL SPRINKLERS LOCATED IN EXPOSED FRAMING AREAS (MEASURED HORIZONTALLY). COORDINATE EXACT LOCATIONS OF BRIDGING AND KICKERS WITH INFORMATION SHOWN ON ARCHITECTURAL AND FIRE SPRINKLER CONSTRUCTION DOCUMENTS. CONTRACTOR NOTE THAT BRIDGING ADJUSTMENTS AFTER INITIAL INSTALLATION AS COORDINATION WITH OTHER TRADES MAY OCCUR.

9. THE STEEL JOIST MANUFACTURER SHALL SUBMIT ERECTION DRAWINGS AND STRUCTURAL CALCULATIONS STAMPED BY A LICENSED CIVIL OR STRUCTURAL ENGINEER IN THE STATE OF WASHINGTON TO THE ENGINEER OF RECORD FOR REVIEW PRIOR TO FABRICATION. A MAXIMUM DEAD PLUS LIVE LOAD DEFLECTION OF L/240 AND A MAXIMUM LIVE LOAD DEFLECTION OF L/360 SHALL BE MAINTAINED.

10. ALIGN JOIST PANEL POINTS TO FACILITATE MECHANICAL, PLUMBING, AND FIRE SPRINKLER PASSAGE WHERE REQUIRED BY ARCHITECTURAL, MECHANICAL, OR PLUMBING DRAWINGS.

11. STEEL JOIST PANEL POINTS TO BE LOCATED AND COORDINATED WITH STRUCTURAL STEEL CONTRACTOR AND ROOF TOP MECHANICAL SCREEN POSTS (MAX 6" FROM PANEL POINT).

STRUCTURAL STEEL AND MISCELLENEOUS METAL (ALL OTHER STEEL)

1. ALL STEEL SHALL BE DETAILED, FABRICATED AND ERECTED IN ACCORDANCE WITH THE LATEST EDITION OF AISC SPECIFICATION FOR THE DESIGN, FABRICATION AND ERECTION OF STRUCTURAL STEEL FOR BUILDINGS AND THE LATEST EDITION OF AISC SEISMIC PROVISIONS FOR STRUCTURAL STEEL BUILDINGS. WHERE THE STRUCTURAL STEEL IS EXPOSED AND INDICATED AS 'AESS' ON PLANS OR DETAILS, FABRICATION AND ERECTION SHALL ALSO BE IN ACCORDANCE WITH AISC CODE OF STANDARD PRACTICE FOR ARCHITECTURALLY EXPOSED STRUCTURAL STEEL.

2. GENERAL CONTRACTOR TO DETERMINE SCOPE OF WORK FOR BOTH STRUCTURAL STEEL AND MISCELLANEOUS METAL SUBCONTRACTORS (IF MULTIPLE SUBCONTRACTORS ARE USED). THE COMBINED SCOPE OF WORK FOR ALL SUBCONTRACTORS SHALL INCLUDE ALL STRUCTURAL STEEL AND MISCELLANEOUS METAL WORK SHOWN ON THE CONTRACT DRAWINGS.

3. STRUCTURAL STEEL SHALL CONFORM TO ASTM DESIGNATION AS INDICATED BELOW UNLESS NOTED OTHERWISE:

ALL WIDE FLANGE AND WT SHAPES	A992, GRADE 50
STEEL ANGLES AND CHANNELS	A36 UNO
ALL OTHER STRUCTURAL SECTIONS	A572, GRADE 50
DECK CLOSURE PLATES AND SHIM MATERIALS	A36
BEAM SHEAR PLATES, STIFFENER PLATES ALL OTHER PLATES	A572, GRADE 50 UNO
HSS (RECTANGULAR AND SQUARE)	A500, GRADE B
HSS (ROUND)	A500, GRADE C
STEEL PIPE (NOT LABELED AS HSS)	A53, GRADE B
STAINLESS STEEL SHAPES, PLATES AND BARS	A276
BOLTS	A325N
MACHINE BOLTS (USE ONLY WHERE INDICATED)	A307
ANCHOR BOLTS	F1554, GRADE 36 OR 105, HEADED (SEE COL SCHED AND FRAME ELEVATIONS)
THREADED AND HANGER ROD	A572, GR50
NUTS FOR BOLTS AND MACHINE BOLTS	A563
HARDENED WASHERS	F436
UNHARDENED WASHERS	F844
PLAIN WASHERS	ANSI B18.22.1

4. HIGH STRENGTH BOLTS SHALL BE INSTALLED IN ACCORDANCE WITH THE LATEST EDITION OF AISC SPECIFICATIONS FOR STRUCTURAL JOINTS USING ASTM A325. HIGH STRENGTH BOLTS SHALL BE FRICTION TYPE WITH THREADS EXCLUDED FROM THE FROM THE SHEAR PLANES (I.E. A325-X, SLIP CRITICAL) UNLESS NOTED OTHERWISE.

5. HEADED ANCHOR STUDS AND THREADED STUDS SHALL BE NELSON (ICC ER-2856) GRANULAR FLUX-FILLED, AND SHALL BE MADE FROM COLD FINISHED LOW CARBON STEEL, CONFORMING TO ASTM A-108, GRADES 1010 THROUGH 1020 WITH A MINIMUM TENSILE STRENGTH OF 60,000 PSI. STUD WELDING INSPECTION AND TESTING SHALL CONFORM TO AWS D1.1.

6. DEFORMED BAR ANCHOR STUDS SHALL BE NELSON D2L (ICC ER-2907) GRANULAR FLUX-FILLED REBAR STUDS, AND SHALL BE MADE OF LOW CARBON COLD ROLLED STEEL WITH A MINIMUM TENSILE STRENGTH OF 80,000 PSI. STUD WELDING INSPECTION AND TESTING SHALL CONFORM TO AWS D1.1.

7. HOT DIP GALVANIZE IN ACCORDANCE WITH ASTM A123 AND ASTM A153 STRUCTURAL STEEL, MISCELLANEOUS METAL AND FASTENERS THAT ARE EXPOSED TO THE WEATHER. REPAIR GALVANIZING AFTER WELDING IN ACCORDANCE WITH ASTM A780.

8. WHEN FABRICATING BEAMS, PLACE NATURAL CAMBER UP. PROVIDE UPWARD CAMBER TO ALL MEMBERS SHOWN TO HAVE CAMBER. AMOUNT MEASURED IN THE FIELD PRIOR TO ERECTION SHALL NOT DEVIATE BY MORE THAN ALLOWED BY THE AISC SPECIFICATIONS. DO NOT CAMBER MEMBERS OCCURRING BELOW ELEVATOR ENTRANCE DOORS.

9. SPLICE MEMBERS ONLY WHERE INDICATED.

10. THE STRUCTURAL STEEL FABRICATOR SHALL FURNISH SHOP DRAWINGS FOR OWNER'S REPRESENTATIVE REVIEW BEFORE FABRICATION. SUBMITTALS SHALL BE IN SIZES COMMENSURATE WITH A TWO WEEK TURNAROUND TIME. A MAXIMUM OF 250 SHOP DRAWINGS EVERY TWO WEEKS IS PERMITTED UNLESS WRITTEN AUTHORIZATION IS PROVIDED BY THE ARCHITECT TO CHANGE THIS LIMIT.

11. AFTER FABRICATION, ALL STEEL SHALL BE CLEANED FREE OF RUST, LOOSE MILL SCALE AND OIL.

12. BOLT HOLES IN STEEL SHALL BE STANDARD HOLES, 1/16 INCH LARGER IN DIAMETER THAN NOMINAL SIZE OF BOLT USED, UNLESS NOTED OTHERWISE. BOLT HOLES IN BASE PLATES MAY BE OVERSIZED PER AISC TABLE 14-2 IF WASHERS ARE PROVIDED IN ACCORDANCE WITH THIS TABLE.

13. BOLTS SHALL BE SPACED AT 3" O.C. UNLESS NOTED OTHERWISE. THE DISTANCE FROM THE EDGE OF A STANDARDS HOLE TO THE EDGE OF A CONNECTING PART IN ANY DIRECTION SHALL NOT BE LESS THAN 1 1/2" U.N.O. THE EDGE DISTANCE MAYBE 1 1/4" AT THE ENDS OF BEAM CONNECTION ANGLES AND SHEAR END PLATES. THE DISTANCE FROM CENTER OF AN OVERSIZED OR SLOTTED HOLE TO THE EDGE OF A CONNECTING PART SHALL NOT BE LESS THAN THAT REQUIRED FOR A STANDARD HOLE TO THE EDGE OF A CONNECTED PART PLUS THE APPLICABLE INCREMENT C/2 FROM AISC TABLE J3.5.

14. ALL STRUCTURAL STEEL SURFACES TO BE WELDED OR HIGH-STRENGTH BOLTED, TO BE ENCASED IN CONCRETE OR TO RECEIVE SPRAY-APPLIED FIREPROOFING SHALL BE LEFT UNPAINTED.

15. SEE ARCHITECTURAL DRAWINGS FOR DETAILS OF FIREPROOFING.

16. COLUMN SHORTENING MAY OCCUR DUE TO THE WEIGHT OF CONSTRUCTION IN THE LEVELS ABOVE. COLUMNS WILL CONTINUE TO SHORTEN UNTIL ALL OF THE DEAD LOAD IS ON THE STRUCTURE, INCLUDING THE WEIGHT OF CLADDING, FLOOR BEAMS, TRANSFER GIRDERS, AND CANTILEVERS WILL CONTINUE TO DEFLECT WHEN ADDITIONAL LOAD IS APPLIED. HOWEVER, THIS MAY OR MAY NOT OCCUR UNTIL ALL OF THE DEAD LOAD IS APPLIED TO THE MEMBER.
THE FLOOR STRUCTURE (COMPOSITE SLAB DECK AND FRAMING) WILL DEFLECT DURING CONCRETE PLACEMENT. THE CONTRACTOR SHALL PROVIDE ADDITIONAL CONCRETE MATERIALS AS NECESSARY TO PROVIDE A FLAT FLOOR UP TO A MAXIMUM 1/4" ADDITIONAL THICKNESS.

17. REFER TO ARCHITECTURAL PLANS FOR MINIMUM HOURLY VALUES OF STEEL FIRE PROTECTION FOR DETERMINING THE THICKNESS OF SPRAY APPLIED FIREPROOFING. THE STRUCTURAL FRAME CONSISTS OF COLUMNS, STRUCTURAL ELEMENTS SUPPORTING TRIBUTARY AREAS EXCEEDING 200 SQUARE FEET, AND ALL BRACING MEMBERS IN PLAN AND ELEVATION. FLOOR OR ROOF MEMBERS WHICH HAVE NO CONNECTION TO COLUMNS AND ARE NOT SUPPORTING TRIBUTARY AREAS EXCEEDING 200 SQUARE FEET SHALL BE CONSIDERED SECONDARY MEMBERS.

POWDER ACTUATED FASTENERS (SHOT PINS)

1. POWDER ACTUATED FASTENERS INTO STEEL SHALL BE HILTI X-U FASTENERS (ESR-2269) OR RAMSET SP FASTENERS (ESR-1799). INSTALL ANCHORS IN (ESR-2269) OR RAMSET SP FASTENERS (ESR-1799). INSTALL ANCHORS IN ACCORDANCE WITH ICC REPORT AND MANUFACTURER'S RECOMMENDATIONS. FASTENERS SHALL BE OF SUFFICIENT LENGTH SUCH THAT THE POINT OF THE PIN PENETRATES THROUGH THE STEEL BASE MATERIAL WHEN CONNECTING TO STEEL LESS THAN 3/4 IN THICKNESS. FASTENERS LENGTH SHALL PROVIDE MINIMUM POINT PENETRATION OF 1/2" WHEN CONNECTING TO STEEL 3/4" OR THICKER IN THICKNESS U.N.O.

2. POWDER ACTUATED FASTENERS INTO CONCRETE SHALL BE HILTI X-U FASTENERS (ESR-2269) OR RAMSET SP STEPPED SHANK FASTENERS (ESR-1799). INSTALL ANCHORS IN ACCORDANCE WITH ICC REPORT AND MANUFACTURER'S RECOMMENDATIONS. PROVIDE FASTENERS WITH SUFFICIENT LENGTH TO PROVIDE 1-1/2" MINIMUM PENETRATION INTO CONCRETE U.N.O

3. FASTENERS SHALL NOT BE INSTALLED UNTIL THE CONCRETE HAS REACHED ITS DESIGNATED STRENGTH.

4. FASTENERS SHALL NOT BE INSTALLED IN CONCRETE WITH THICKNESS LESS THAN THREE TIMES THE PENETRATION REQUIRED, EXCEPT 1 1/2" PENETRATION IN 2 1/2" THICK CONCRETE FILL OVER METAL DECK IS ACCEPTABLE.

5. PROVIDE A MINIMUM OF 3" BETWEEN THE EDGE OF CONCRETE TO CENTER OF ANCHOR.

6. FASTENERS IN THE UNDERSIDE OF CONCRETE FILL OVER METAL DECK SHALL BE PLACED IN THE LOW FLUTES ONLY.

7. FASTENERS SHALL BE INSTALLED, BY A PRE-QUALIFIED OPERATOR, ACCORDING TO THE APPLICABLE ICC RESEARCH REPORT AND TESTED AS FOLLOWS: INSPECTOR SHALL OBSERVE THE TESTING OF THE FIRST 10 FASTENERS INSTALLATION. A TEST PULL-OUT LOAD OF NOT LESS THAN TWICE THE APPLICABLE ALLOWABLE LOAD PER ICC TABLES SHALL BE APPLIED TO THE PIN IN SUCH A MANNER AS NOT TO RESIST THE SPALLING TENDENCY OF THE CONCRETE SURROUNDING THE PIN (NOT APPLICABLE TO PINS INSTALLED INTO STEEL). RANDOM TESTS UNDER THE PROJECT INSPECTOR'S SUPERVISION SHALL BE MADE OF APPROXIMATELY 1 IN 20 PINS. SHOULD FAILURE OCCUR ON ANY PIN TESTED, ALL OF THE INSTALLATIONS MUST BE TESTED AND FAILED PINS REPLACED AT CONTRACTOR'S EXPENSE.

8. WHEN INSTALLING POWDER DRIVEN PINS IN EXISTING REINFORCED CONCRETE, USE CARE AND CAUTION TO AVOID CUTTING OR DAMAGING THE EXISTING REINFORCING BARS

STRUCTURAL STEEL AND MISCELLANEOUS METAL (ALL OTHER STEEL) WELDING

1. ALL WELDING SHALL BE IN STRICT CONFORMANCE WITH THE LATEST EDITION OF AWS D1.1 AND THE INTERNATIONAL BUILDING CODE WITH ALL APPLICABLE AMENDMENTS. ALL WELDED JOINTS SHALL BE PRE-QUALIFIED PER THE LATEST EDITION OF AWS D1.1. AND THE INTERNATIONAL BUILDING CODE WITH ALL APPLICABLE AMENDMENTS. ALL NON PRE- QUALIFIED WELDED JOINTS SHALL BE QUALIFIED BY TEST & PROCEDURE QUALIFICATION TEST RECORD INCLUDED PER THE 2010 AWS D1.1.

2. WELDING OF SHEET METAL AND METAL STUDS SHALL BE IN ACCORDANCE WITH AWS D1.3.

3. WELD LENGTHS CALLED FOR ON PLANS ARE THE NET EFFECTIVE LENGTH REQUIRED. WELD SIZE SHALL BE AISC MINIMUM UNLESS A LARGER SIZE IS NOTED. WHERE LENGTH OF WELD IS NOT SHOWN IT SHALL BE FULL LENGTH OF JOINT. ALL BUTT AND GROOVE WELDS SHALL BE FULL PENETRATION, UNLESS NOTED OTHERWISE.

4. ALL WELDING ELECTRODES AND ELECTRODE FLUX COMBINATIONS (FILLER METAL) SHALL BE E7XTX, E7XTXX OR E70XXX (MINIMUM 70 KSI), UNLESS NOTED OTHERWISE, AND SHALL MEET THE REQUIREMENTS FOR H16 PER AISC SEISMIC PROVISIONS.

5. ALL WELDS SHALL HAVE A FILLER METAL WITH CHARPY V-NOTCH TOUGHNESS OF 20 FT-LBS AVERAGE AT MINUS TWENTY DEGREES FAHRENHEIT AND 40FT-LBS AT SEVENTY DEGREES FAHRENHEIT. CERTIFY CONFORMANCE TO CHARPY V-NOTCH TOUGHNESS REQUIREMENTS WITH TESTS BY AN INDEPENDENT TESTING LABORATORY.

6. GMAW AND FCAW-G WELDING PROCESSES SHALL NOT BE PERMITTED WHEN WIND SPEED EXCEEDS 3 MPH.

7. WHERE FIELD WELDING IS NOTED, THE DESIGNATION IS GIVEN AS A SUGGESTED CONSTRUCTION PROCEDURE ONLY. THE CONTRACTOR IS SOLELY RESPONSIBLE FOR IDENTIFYING THE METHOD OF FABRICATION.

8. ALL SHOP WELDS SHALL BE PERFORMED BY A FABRICATOR LICENSED BY THE LOCAL JURISDICTION.

9. ALL WELDERS SHALL BE QUALIFIED FOR THE WORK THEY WILL BE PERFORMING AND SHALL HAVE CURRENT VALID CERTIFICATIONS ISSUED BY AWS AND THE GOVERNING JURISDICTION.

10. FACES OF FILLET WELDS EXPOSED TO VIEW SHALL HAVE AS-WELDED SURFACES THAT ARE REASONABLY SMOOTH AND UNIFORM. NO FINISHING OR GRINDING SHALL BE REQUIRED, EXCEPT WHERE CLEARANCES OR FIT OF OTHER ITEMS MAY SO NECESSITATE.

11. ALL PARTIAL AND FULL PENETRATION WELDS WHICH ARE EXPOSED TO VIEW SHALL BE GROUND SMOOTH AND FLUSH WITH FINISH SURFACE OF STEEL. HOLES EXPOSED TO VIEW SHALL BE FILLED WITH WELD METAL OR BODY SOLDER AND SMOOTHED BY GRINDING OR FILING.

12. CLEAN GROOVE PREPARATION THERMAL CUTS BY GRINDING.

13. WELDS SHALL BE TERMINATED AT THE END OF A JOINT IN A MANNER THAT WILL ENSURE SOUND WELDS. WHENEVER NECESSARY THIS SHALL BE DONE BY USE OF EXTENSION BARS AND RUN OFF TABS.

14. A WRITTEN "WELDING PROCEDURE SPECIFICATION" (WPS), PER AWS D1.1, SHALL BE DEVELOPED BY THE FABRICATOR/ERECTOR, AND REVIEWED BY THE OWNER'S REPRESENTATIVE AND BUILDING DEPARTMENT. THE WPS SHALL CONTAIN ALL THE NECESSARY INFORMATION REQUIRED BY THE CODE, THE SPECIFICATIONS, AND ANY OTHER INFORMATION NECESSARY TO PRODUCE WELDS THAT ARE IN COMPLIANCE WITH THESE REQUIREMENTS. THE WPS SHALL INCLUDE THE WELDING PARAMETERS RECOMMENDED BY THE ELECTRODE MANUFACTURER. ALL WELDERS AND INSPECTORS SHALL ADHERE TO THE WPS AND SHALL RETAIN A COPY

ADHESIVE ANCHORS AND DOWELS

1. ANCHORS AND DOWELS INSTALLED INTO CONCRETE SHALL BE INSTALLED USING HILTI HIT RE 500-SD (ICC ESR-2322) OR HILTI HIT-HY200 (ICC ESR 3187). INSTALLATION SHALL BE IN ACCORDANCE WITH ICC REPORT AND MANUFACTURER'S RECOMMENDATIONS. EMBEDMENT DEPTH FOR ANCHORS AND DOWELS IS AS FOLLOWS, UNLESS OTHERWISE NOTED. THE TESTING LABORATORY WILL PERFORM TENSION TESTS ON 25% OF ANCHORS AND DOWELS TO THE FOLLOWING TEST LOADS:

ROD DIA OR BAR SIZE	EMBEDMENT	TEST LOAD	BASE MATERIAL
3/8"	4"	3,000#	CONCRETE
1/2"	5"	4,500#	CONCRETE
5/8"	6"	6,500#	CONCRETE
3/4"	7"	9,000#	CONCRETE
7/8"	9"	11,000#	CONCRETE
1"	11"	15,000#	CONCRETE
1 1/4"	14"	20,000#	CONCRETE
#3	5"	3,500#	CONCRETE
#4	6 1/2"	5,500#	CONCRETE
#5	8"	8,500#	CONCRETE
#6	10"	12,000#	CONCRETE
#7	12"	16,500#	CONCRETE
#8	18"	21,500#	CONCRETE
#9	16"	23,000#	CONCRETE
#10	19"	26,500#	CONCRETE

2. ANCHORS SHALL CONFORM WITH ASTM A193 GRADE B7 THREADED RODS USING ASTM A 563 GRADE DH HEAVY HEX NUTS AND ASTM F436 WASHERS U.N.O.

3. DOWELS SHALL CONFORM WITH ASTM A615 OR ASTM A706 GRADE 60 REINFORCING STEEL U.N.O.

4. REPLACE ANCHORS AND DOWELS THAT FAIL DURING TESTING AND RETEST. IF MORE THAN 10% OF THE TESTED DOWELS AND ANCHORS FAIL TO ACHIEVE THE SPECIFIED TEST LOAD, TEST 100% OF THE DOWELS AND ANCHORS INSTALLED IN THE LAST 2 DAYS OF ANCHOR INSTALLATION.

5. CENTER BAR IN THE HOLE AND WEDGE TIGHT WITH WOODEN WEDGES TO HOLD IT IN PLACE UNTIL THE ADHESIVE SETS.

6. IF REINFORCEMENT IS ENCOUNTERED DURING DRILLING, ABANDON AND SHIFT THE HOLE LOCATION TO AVOID THE REINFORCEMENT. PROVIDE A MINIMUM OF 2 ANCHOR DIAMETERS OR 1 INCH, WHICHEVER IS LARGER, OF SOUND CONCRETE BETWEEN THE DOWEL AND THE ABANDONED HOLE. FILL THE ABANDONED HOLE WITH NON-SHRINK GROUT. IF THE ANCHOR OR DOWEL MAY NOT BE SHIFTED AS NOTED ABOVE, THE ENGINEER WILL DETERMINE A NEW LOCATION.

7. LOCATE REINFORCEMENT AND CONFIRM FINAL ANCHOR LOCATIONS PRIOR TO FABRICATING PLATES, MEMBERS, OR OTHER STEEL ASSEMBLIES ATTACHED WITH ADHESIVE ANCHORS.

MECHANICAL ANCHORS

1. EXPANSION OR WEDGE ANCHORS INTO CONCRETE: HILTI KB TZ (ICC ESR-1917) OR SIMPSON STRONG BOLT 2 (ICC 3037) TO BE INSTALLED IN ACCORDANCE WITH ICC REPORT AND MANUFACTURER'S RECOMMENDATIONS.

2. FASTENERS SHALL BE STAINLESS STEEL FOR EXTERIOR USE OR WHEN EXPOSED TO WEATHER. PROVIDE GALVANIZED CARBON STEEL ANCHORS AT OTHER LOCATIONS, UNLESS OTHERWISE NOTED.

3. IF REINFORCEMENT IS ENCOUNTERED DURING DRILLING, ABANDON AND SHIFT THE HOLE LOCATION TO AVOID THE REINFORCEMENT. PROVIDE A MINIMUM OF 2 ANCHOR DIAMETERS OR 1 INCH, WHICHEVER IS LARGER, OF SOUND CONCRETE BETWEEN THE DOWEL AND THE ABANDONED HOLE. FILL THE ABANDONED HOLE WITH NON-SHRINK GROUT. IF THE ANCHOR OR DOWEL MAY NOT BE SHIFTED AS NOTED ABOVE, THE STRUCTURAL ENGINEER WILL DETERMINE A NEW LOCATION.

4. LOCATE REINFORCEMENT AND CONFIRM FINAL ANCHOR LOCATIONS PRIOR TO FABRICATING PLATES, MEMBERS, OR OTHER STEEL ASSEMBLIES ATTACHED WITH MECHANICAL ANCHORS.

5. ANCHORS SHALL BE PROOF-TESTED BY OWNER'S TESTING AND INSPECTION AGENCY.

6. TEST ANCHORS NO SOONER THAN 24 HOURS AFTER INSTALLATION.

7. APPLY TEST LOAD BY ANY METHOD THAT WILL EFFECTIVELY MEASURE THE TENSION ON THE ANCHOR SUCH AS DIRECT PULL WITH A HYDRAULIC JACK, TORQUE WRENCH, OR CALIBRATED SPRING_LOADING DEVICES, ETC.

8. REACTION LOADS FROM TEST FIXTURES MAY BE APPLIED CLOSE TO THE ANCHOR BEING TESTED, PROVIDED THE ANCHOR IS NOT RESTRAINED FROM WITHDRAWING BY A BASE PLATE OR OTHER FIXTURE. IF RESTRAINT IS FOUND, LOOSEN AND SHIM OR REMOVE THE FIXTURE PRIOR TO TESTING.

9. UNLESS OTHERWISE NOTED, PROVIDE MINIMUM EMBEDMENT OF ANCHORS AS SHOWN IN TABLES BELOW.

10. TEST 50% OF ANCHORS PER ONE OF THE FOLLOWING METHODS AND IN ACCORDANCE WITH THE VALUES SHOWN IN THE TABLE:
    A. HYDRAULIC RAM METHOD: APPLY PROOF TEST LOAD WITHOUT REMOVING THE NUT. IF IT IS NOT POSSIBLE TO TEST WITH THE NUT INSTALLED, REPLACE THE NUT WITH A THREADED COUPLER TO THE SAME TORQUE MEASURED WITH A TORQUE WRENCH, AND THEN APPLY THE LOAD. ANCHOR IS ACCEPTABLE IF NO MOVEMENT IS OBSERVED AT THE TEST LOAD. MOVEMENT MAY BE DETERMINED WHEN THE WASHER UNDER THE NUT BECOMES LOOSE.
    B. TORQUE WRENCH METHOD: TEST ANCHORS TO THE TORQUE LOAD INDICATED IN THE TABLE WITHIN ONE-HALF TURN OF THE NUT.

11. IF ANY ANCHOR FAILS TESTING, REPLACE ANCHOR AND TEST ADDITIONAL ANCHORS OF THE SAME CATEGORY NOT PREVIOUSLY TESTED UNTIL TWENTY (20) CONSECUTIVE TESTS PASS, THEN RESUME INITIAL TESTING FREQUENCY.

WEDGE OR EXPANSION ANCHOR EMBEDMENT DEPTH AND TEST LOAD

ANCHOR DIAMETER	MIN EMBED	ANCHORS IN CONCRETE		ANCHORS IN MASONRY	
		TENSION LOAD (LBS)	TORQUE LOAD (FT-LBS)	TENSION LOAD (LBS)	TORQUE LOAD (FT-LBS)
1/4"	2"	800	10	300	10
3/8"	2"	1500	25	500	30
1/2"	3 1/4"	3000	40	1000	35
5/8"	4	4900	80	1250	55
3/4"	4 3/4"	6300	110	1700	120

CLIENT

CENTERCAL PROPERTIES, LLC

COPYRIGHT:

Any reproduction or distribution for any purpose other than authorized by IBI Group is forbidden. Written dimensions shall have precedence over scaled dimensions. Contractors shall verify and be responsible for all dimensions and conditions on the job, and IBI Group must be informed of any variations from the dimensions and conditions shown on the drawing. Shop drawings shall be submitted to IBI Group for approval before proceeding with fabrication.

COPYRIGHT © 2016 IBI GROUP

ISSUES

NO.	ISSUANCE	STATUS	DATE
1	STRUCTURAL ADDENDUM 1		5/31/2016

SEAL

BARRY SCHNEIDER, STATE OF WASHINGTON, 21669, REGISTERED PROFESSIONAL ENGINEER

EXPIRES

SUB CONSULTANT

MARTIN & associates
JOHN A. MARTIN & ASSOCIATES
Structural Engineers
950 S. Grand Avenue
Los Angeles, Calif. 90015
Phone (213) 483-6490
Fax (213) 483-3084
J14261

PRIME CONSULTANT

IBI
IBI GROUP
18401 Von Karman Avenue, Suite 110
Irvine, CA 92612 United States
tel +1 949 833 5588 ext 146 fax +1 949 833 5511
ibigroup.com

PROJECT

The Village at Totem Lake - Building A
Kirkland, Washington

PROJECT NO:	J14261
DRAWN BY:	BK
CHKD BY:	JC
SCALE:	AS SHOWN
DATE:	04/27/16

SHEET TITLE

GENERAL NOTES

BLDG	SHEET NUMBER	ISSUE
A	S0002	

STRUCTURAL ABBREVIATIONS

		INFO	INFORMATION
AB	ANCHOR BOLT	INT	INTERIOR
ABV	ABOVE		
ADDL	ADDITIONAL	JST	JOIST
ALT	ALTERNATE	JT	JOINT
ANCH	ANCHOR		
&	AND	KSI	KIP PER SQUARE INCH
ARCH	ARCHITECT(URAL)		
@	AT	LBS	POUNDS
		LLBB	LONG LEG BACK-BACK
BF	BRACE FRAME	LLH	LONG LEG HORIZONTAL
BLDG	BUILDING	LLV	LONG LEG VERTICAL
BLK	BLOCK	LONG	LONGITUDINAL
BLKG	BLOCKING	LT WT	LIGHT WEIGHT
BEL	BELOW	LVL	LAMINATED VENEER (LUMBER)
BM	BEAM	LVL	LEVEL (FLOOR)
BN	BOUNDARY NAILING		
B or BOT	BOTTOM	MAX	MAXIMUM
BRG	BEARING	MB	MACHINE BOLT
BTWN	BETWEEN	MECH	MECHANICAL
BU	BUILT-UP	MEZZ	MEZZANINE
BUB	BACK-UP BAR	MFR	MANUFACTURER
		MIN	MINIMUM
CAMB(C)	CAMBER(ED)	MISC	MISCELLANEOUS
CBC	CALIFORNIA BUILDING CODE	MTL	METAL
CG	CENTER OF GRAVITY	MS	MIDDLE STRIP
CIP	CAST IN PLACE		
CJ	CONSTRUCTION JOINT	(N)	NEW
	OR CONTROL JOINT	NIC	NOT IN CONTRACT
CJP	COMPLETE JOINT	NO (#)	NUMBER
	PENETRATION	NS	NEAR SIDE
CL(℄)	CENTERLINE	NTS	NOT TO SCALE
CLG	CEILING	NORM WT	NORMAL WEIGHT
CLR	CLEAR		
CMU	CONCRETE MASONRY UNIT	OC	ON CENTER (NOT NECESSARY)
COL	COLUMN	OD	OUTSIDE DIAMETER
CONC	CONCRETE	OF	OUTSIDE FACE
CONN	CONNECTION	OH	OPPOSITE HAND
CONT	CONTINUOUS	O-O	OUT TO OUT
CS	COLUMN STRIP	OPNG	OPENING
CRC	COLD ROLLED CHANNEL		
CTR	CENTER(ED)	PARA	PARALLEL
CTRSK	COUNTERSINK	P/C	PRECAST
C-C	CENTER TO CENTER	PERP	PERPENDICULAR
		PJP	PARTIAL JOINT PENETATION
d	PENNEY(NAILS)	PL (⅊)	PLATE
DBL	DOUBLE	PLY	PLYWOOD
DET	DETAIL	PSF	POUNDS PER SQUARE FOOT
DF	DOUGLAS FIR	PSI	POUNDS PER SQUARE INCH
DIA(Ø)	DIAMETER	PT	PRESSURE TREATED
DIAG	DIAGONAL	P/T	POSTTENSIONED(PRESTRESSED)
DIM	DIMENSION		
DN	DOWN	RAD (R)	RADIUS
DO	DITTO (REPEAT)	REF	REFERENCE
DP	DEEP	REQ'D	REQUIRED
DWG	DRAWING	REINF	REINFORCEMENT(ING)
DWL	DOWELS	RJ	ROOF JOIST
EA	EACH	SC	SLIP CRITICAL
EBF	ECCENTRIC BRACE FRAME	SEP	SEPARATION
EF	EACH FACE	SCHED	SCHEDULE
EJ	EXPANSION JOINT	SIM	SIMILAR
ELEC	ELECTRICAL	SIMP	SIMPSON
ELEV	ELEVATION/ELEVATOR	SHT	SHEET
EMBED	EMBEDMENT	SHTG	SHEATHING
EN	EDGE NAILING	SLBB	SHORT LEB BACH-BACK
EQ	EQUAL	SLV	SHORT LEB VERTICAL
EQUIP	EQUIPMENT	SMS	SHEET METAL SCREWS
ES	SIDE EACH	SOG	SLAB ON GRADE
EW	EACH WAY	SPECS	SPECIFICATIONS
EXIST(E)	EXISTING	SP	SPACE (S)
EXP	EXPANSION	SQ	SQUARE
EXT	EXTERIOR	SSC	SINGLE SHEAR CONNECTION
		STAGG	STAGGER(ED)
FIN	FINISH(ED)	STD	STANDARD
FLR	FLOOR	STIFF	STIFFENER
FDN	FOUNDATION	STL	STEEL
FLG	FLANGE	STRUC	STRUCTURAL
FN	FIELD NAILING	SYMM	SYMMETRICAL
FOB	FACE OF BLOCK OR BRICK		
FOC	FACE OF CONCRETE	T & B	TOP AND BOTTOM
FO PLY	FACE OF PLYWOOD	T & G	TONGUE AND GROOVE
FOS	FACE OF STUDS	TEMP	TEMPORARY
FMG	FRAMING	THK	THICK(NESS)
FS	FAR SIDE	THRD	THREADED
FT	FOOT	THRU	THROUGH
FTG	FOOTING	TP	TOP OF PARAPET
		T PLY	TOP OF PLYWOOD
GA	GAGE	TRANS	TRANSVERSE
GALV	GALVANIZED	TOC	TOP OF CONCRETE
GB	GRADE BEAM	TOS	TOP OF STEEL
GL	GRID LINE	TSG	TAPERED STEEL GIRDER
GLB	GLUE-LAMINATED BEAM	TOW	TOP OF WALL
		TYP	TYPICAL
HCA	HEADED CONCRETE		
	ANCHOR	UNO	UNLESS NOTED OTHERWISE
HD	HOLD DOWN		
HDR	HEADER	VERT	VERTICAL
HGR	HANGER		
HORIZ	HORIZONTAL	W/	WITH
HSB	HIGH STRENGTH BOLT	WBS	WELDED BEAM SEAT
HS	HIGH STRENGTH	WD	WOOD
HT	HEIGHT	WP	WORK POINT
		WPJ	WEAKENED PLANE JOINT
IBC	INTERNATIONAL BUILDING CODE	WS	WELDED STUDS
ID	INSIDE DIAMETER	WT	WEIGHT
IF	INSIDE FACE	WWF	WELDED WIRE FABRIC
IN	INCH		

INSPECTION / TESTING

1. AN INDEPENDENT TESTING AGENCY AND SPECIAL INSPECTORS SHALL BE RETAINED BY THE OWNER TO PERFORM THE TESTS AND INSPECTION AS REQUIRED BY SECTION 1704 OF THE INTERNATIONAL BUILDING CODE. THE CONTRACTOR SHALL PROVIDE ACCESS TO THE SPECIAL INSPECTOR TO THE SITE OR FABRICATION SHOPS AND SHALL FURNISH SAMPLES OF MATERIALS FOR TESTING AS REQUESTED BY THE TESTING AGENCY AND THE GOVERNING CODE.

2. IF INITIAL TESTS OR INSPECTIONS MADE BY THE OWNER'S TESTING AGENCY REVEAL THAT ANY PORTION OF THE WORK DOES NOT COMPLY WITH THE CONTRACT DOCUMENTS, ADDITIONAL TESTS, INSPECTIONS, AND NECESSARY REPAIRS WILL BE MADE AT THE CONTRACTOR'S EXPENSE.

3. PROVIDE CONTINUOUS OR PERIODIC SPECIAL INSPECTION FOR ITEMS NOTED IN "TEST AND INSPECTION LIST", AS REQUIRED PER THE CHAPTER 17 OF THE 2012 INTERNATIONAL BUILDING CODE AND ALL APPLICABLE CITY OF KIRKLAND AND STATE OF WASHINGTON AMENDMENTS: 1

4. SPECIAL INSPECTIONS MAY NOT BE REQUIRED WHEN THE WORK IS DONE ON THE PREMISES OF A FABRICATOR REGISTERED AND APPROVED BY THE BUILDING OFFICIAL OR GOVERNING AGENCY HAVING JURISDICTION OVER THE PROJECT TO PERFORM SUCH WORK WITHOUT SPECIAL INSPECTION.

5. EACH CONTRACTOR RESPONSIBLE FOR THE CONSTRUCTION OF A WIND OR SEISMIC FORCE RESISTING SYSTEM ELEMENT SHALL SUBMIT A WRITTEN STATEMENT OF RESPONSIBILITY TO THE BUILDING OFFICIAL AND TO THE OWNER'S REPRESENTATIVE, PRIOR TO THE COMMENCEMENT OF THE WORK ON THE SYSTEM OR COMPONENT. THE CONTRACTOR'S STATEMENT OF RESPONSIBILITY SHALL CONTAIN THE FOLLOWING INFORMATION:
   A. ACKNOWLEDGEMENT OF AWARENESS OF THE SPECIAL REQUIREMENTS CONTAINED IN THE STATEMENT OF SPECIAL INSPECTIONS.
   B. ACKNOWLEDGEMENT THAT CONTROL WILL BE EXERCISED TO OBTAIN CONFORMANCE WITH THE CONSTRUCTION DOCUMENTS APPROVED BY THE BUILDING OFFICIAL.
   C. PROCEDURES FOR EXERCISING CONTROL WITHIN THE CONTRACTOR'S ORGANIZATION, THE METHOD AND FREQUENCY OF REPORTING AND DISTRIBUTION OF THE REPORTS.
   D. IDENTIFICATION AND QUALIFICATIONS OF THE PERSONS EXERCISING SUCH CONTROL AND THEIR POSITIONS IN THE ORGANIZATION.

6. SPECIAL INSPECTIONS FOR THE STRUCTURAL STEEL PORTIONS OF THE LATERAL FORCE RESISTING SYSTEM SHALL ALSO COMPLY WITH THE REQUIREMENTS OF AISC 341.

7. NON-DESTRUCTIVE WELD TESTING: ULTRASONIC TESTING IS REQUIRED FOR ALL (100%) COMPLETE PENETRATION WELDS. TESTING SHALL BE PERFORMED 24 HOURS OR MORE AFTER COMPLETION OF WELDING. WELD BACKING REMOVAL AREAS AND FILLET WELDS SHALL BE SUBJECTED TO MAGNETIC PARTICLE EXAMINATION.

8. BASE METAL THICKER THAN 1-1/2", SUBJECTED TO THROUGH THICKNESS WELD SHRINKAGE STRAINS, SHALL BE ULTRASONICALLY TESTED DIRECTLY BEHIND SUCH WELDS 48 HOURS OR MORE AFTER COMPLETION OF WELDING

9. TEST BY CALIBRATED TORQUE WRENCH A MINIMUM OF ONE (1) HIGH STRENGTH BOLT AT EACH SHEAR CONNECTION. A MINIMUM OF TWO (2) BOLTS PER CONNECTION FOR CONNECTION WITH 8 BOLTS OR MORE AND A MINIMUM OF 2 BOLTS PER FRAME BEAM SHEAR CONNECTION.

10. TEST A MINIMUM OF 10% OF FILLET WELDS BY MAGNETIC PARTICLE (ASTM 109 METHOD). TEST A MINIMUM OF 25% OF CONTINUITY PLATE FILLET WELDS AND BEAM FILLET WELDS (100% IN MOMENT ZONES) BY MAGNETIC PARTICLE.

11. ALL HEAVY SECTION COLUMN FLANGES LOCATED AT WELDED MOMENT CONNECTIONS SHALL BE ULTRASONICALLY EXAMINED, PRIOR TO WELDING, FOR EVIDENCE OF LAMINATIONS, INCLUSIONS OR OTHER DISCONTINUITIES. TESTING SHALL BE IN ACCORDANCE WITH ASTM A435 (STRAIGHT BEAM ULTRASONIC EXAMINATION OF STEEL PLATES), OR ASTM A898 (STRAIGHT BEAM ULTRASONIC EXAMINATION OF ROLLED STEEL STRUCTURAL SHAPES) AS APPLICABLE. THE AREA TO BE TESTED IS A ZONE 6 IN. ABOVE AND BELOW EACH BEAM FLANGE CONNECTION. FOR PLATES, ANY DISCONTINUITY CAUSING A TOTAL LOSS OF BACK REFLECTION THAT CANNOT BE CONTAINED WITHIN A CIRCLE 3 INCHES IN DIAMETER, OR ONE-HALF THE PLATE THICKNESS, WHICHEVER IS GREATER, SHALL BE REJECTED. FOR SHAPES, ASTM 898 LEVEL I CRITERIA IS APPLICABLE.

12. APPROVAL BY THE INSPECTOR OF MATTERS NOT SPECIFICALLY CONSTRUCTED PER THE APPROVED DRAWINGS DOES NOT MEAN THE FAILURE TO COMPLY WITH THE CONSTRUCTION DOCUMENTS HAS BEEN ACCEPTED. ANY DETAIL THAT FAILS TO BE CLEAR OR IS AMBIGUOUS MUST BE REFERRED TO THE STRUCTURAL ENGINEER FOR INTERPRETATION OR CLARIFICATION.

13. INSPECTION AND TESTING REPORTS SHALL BE SUBMITTED TO THE STRUCTURAL ENGINEER WITHIN SEVEN DAYS OF WHEN THE INSPECTION WAS MADE OR WHEN THE TESTING WAS PERFORMED.

14. THE STRUCTURAL ENGINEER SHALL BE NOTIFIED IMMEDIATELY OF ANY INSPECTION OR TESTING WHICH DOES NOT COMPLY WITH THE REQUIREMENTS OF THE CONTRACT DOCUMENTS.

TEST AND INSPECTION LIST

1

STRUCTURAL STEEL					
X	REVIEW MILL CERTIFICATE, TEST REPORTS AND MATERIAL IDENTIFICATION DELIVERED TO THE SITE				
C	REVIEW WELDING PROCEDURE SPECIFICATION & WELDER CERTIFICATION				
P	INSTALLATION OF NON-SLIP CRITICAL HIGH-STRENGTH BOLTS & WASHERS (PROVIDE CONTINUOUS INSPECTION IF INSTALLATION IS PERFORMED WITH CALIBRATED WRENCH)				
C	INSTALLATION OF SLIP CRITICALHIGH-STRENGTH BOLTS & WASHERS				
P	FIELD ERECTION INSPECTION				
X	FABRICATION INSPECTION	P	SHOP	P	FIELD
X	WELDING INSPECTION	C	SHOP	C	FIELD
X	NON-DESTRUCTIVE WELD TEST	X	SHOP	X	FIELD
X	BOLTING INSPECTION	X	SHOP	X	FIELD
P	COMPOSITE STUD INSPECTION & TESTING				
P	STEEL JOIST INSTALLATION INSPECTION				
C	INSTALLATION OF ANCHOR BOLTS BEFORE & DURING CONCRETE POUR				

METAL DECK	
X	REVIEW MILL CERTIFICATES & TEST REPORTS
P	PLACEMENT INSPECTION
P	WELDING & FASTENING INSPECTION

REINFORCING STEEL					
X	REVIEW MILL CERTIFICATES & TEST REPORTS				
X	SAMPLE & TEST	X	REINFORCING BARS	X	WELDED WIRE FABRIC
P	PLACEMENT INSPECTION				
C	WELDING INSPECTION				
P	TEST REINFORCING FOR WELDABILITY OTHER THAN ASTM A706				

CONCRETE, SHOTCRETE, CMU, GROUT & MORTAR

CONCRETE	SHOTCRETE	CMU	GROUT	MORTAR	
X	N/A	N/A	X	N/A	MIX DESIGN REVIEW
X	N/A	N/A	X	N/A	VERIFICATION OF CORRECT MIX DESIGN USED DURING POUR
	N/A	N/A		N/A	PREPARATION OF SAMPLES FOR TESTING PURPOSES
X	N/A	N/A		N/A	BATCH PLANT INSPECTIONS
C	N/A	N/A		N/A	CAST, PICK-UP, AND COMPRESSION TEST SAMPLES
C	N/A	N/A		N/A	SLUMP, ENTRAINED AIR, & TEMPERATURE TEST
X	N/A	N/A		N/A	SHRINKAGE TEST
C	N/A	N/A	C	N/A	PLACEMENT INSPECTION
P	N/A	N/A		N/A	CURING TEMPERATURE AND TECHNIQUES
P	N/A	N/A		N/A	FORMWORK INSPECTION

MISCELLANEOUS	
C	MECHANICAL ANCHORS
C	ADHESIVE OR GROUTED ANCHORS AND DOWELS
C	BOLTS CAST IN CONCRETE
C	COLD FORM METAL FRAMING INSTALLATION AND WELDING

NOTES:
C: INDICATES CONTINUOUS INSPECTION
P: INDICATES PERIODIC INSPECTION
X: INDICATES REQUIRED INSPECTION

CLIENT
CENTERCAL PROPERTIES, LLC

COPYRIGHT:
Any reproduction or distribution for any purpose other than authorized by IBI Group is forbidden. Written dimensions shall have precedence over scaled dimensions. Contractors shall verify and be responsible for all dimensions and conditions on the job and IBI Group shall be informed of any variations from the dimensions and conditions shown on the drawing. Shop drawings shall be submitted to IBI Group for approval before proceeding with fabrication.
COPYRIGHT © 2016 IBI GROUP

ISSUES

NO.	ISSUANCE	STATUS	DATE
1	STRUCTURAL ADDENDUM 1		5/31/2016

SEAL
EXPIRES

SUB CONSULTANT
MARTIN & associates
JOHN A. MARTIN & ASSOCIATES
Structural Engineers
950 S. Grand Avenue
Los Angeles, Calif. 90015
Phone (213) 483-6490
Fax (213) 483-3084
J14261

PRIME CONSULTANT
IBI
IBI GROUP
18401 Von Karman Avenue, Suite 110
Irvine, CA 92612 United States
tel +1 949 833 5588 ext 146 fax +1 949 833 5511
ibigroup.com

PROJECT
The Village at Totem Lake - Building A
Kirkland, Washington

PROJECT NO:	J14261
DRAWN BY:	BK
CHKD' BY:	JC
SCALE:	AS SHOWN
DATE:	04/27/16

SHEET TITLE
GENERAL NOTES

BLDG	SHEET NUMBER	ISSUE
A	S0003	

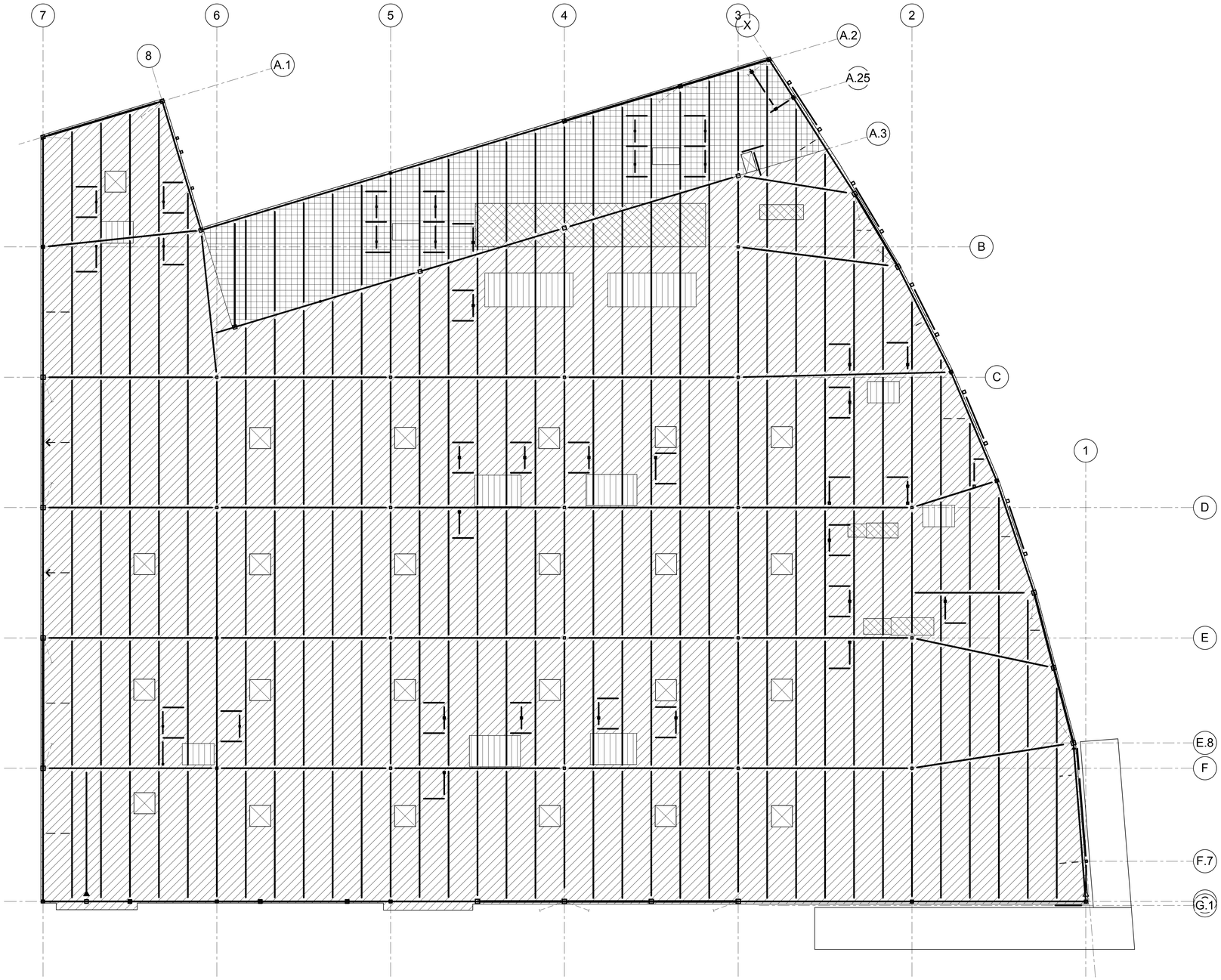

LOAD SCHEDULE - ROOF LEVEL					
MARK	AREA DESCRIPTION	SUPERIMPOSED DEAD LOAD (PSF)(1)(2)	LIVE LOAD (PSF)	SUPERIMPOSED SEISMIC WEIGHT (PSF)(1)(2)	SNOW LOAD (PSF)
	ROOF	14	20	14	25
	MEP UNITS	55	20	55	25
	HEAVY MEP UNITS	110	20	110	25
	ROOF OVER OFFICE	14	20	19	25

NOTES:
1. SCHEDULED DEAD LOAD / SEISMIC WEIGHT DOES NOT INCLUDE SELF-WEIGHT OF STRUCTURE (IE,STEEL BEAMS, STEEL COLUMNS, METAL DECK).

CLIENT

CENTERCAL PROPERTIES, LLC

COPYRIGHT:

Any reproduction or distribution for any purpose other than authorized by IBI Group is forbidden. Written dimensions shall have precedence over scaled dimensions. Contractors shall verify and be responsible for all dimensions and conditions on the job and IBI Group shall be informed of any variations from the dimensions and conditions shown on the drawing. Shop drawings shall be submitted to IBI Group for approval before proceeding with fabrication.

COPYRIGHT © 2016 IBI GROUP

ISSUES

NO.	ISSUANCE	STATUS	DATE
1	STRUCTURAL ADDENDUM 1		5/31/2016

SEAL

BARRY SCHINDLER
STATE OF WASHINGTON
21669
REGISTERED PROFESSIONAL ENGINEER

EXPIRES

SUB CONSULTANT

MARTIN & associates

JOHN A. MARTIN & ASSOCIATES
Structural Engineers
950 S. Grand Avenue
Los Angeles, Calif. 90015
Phone (213) 483-6490
Fax (213) 483-3084
J14261

PRIME CONSULTANT

IBI

IBI GROUP
18401 Von Karman Avenue, Suite 110
Irvine, CA 92612 United States
tel +1 949 833 5588 ext 146 fax +1 949 833 5511
ibigroup.com

PROJECT

The Village at Totem Lake - Building A
Kirkland, Washington

PROJECT NO:	J14261
DRAWN BY:	Author
CHKD' BY:	Checker
SCALE:	AS SHOWN
DATE:	04/27/16

SHEET TITLE

LOADING DIAGRAM

1

BLDG A | SHEET NUMBER S0004 | ISSUE

C:\Users\bkirton\Documents\ATW_Totem_Bldg A_S_2016_bkirton.rvt

5/31/2016 2:52:58 PM

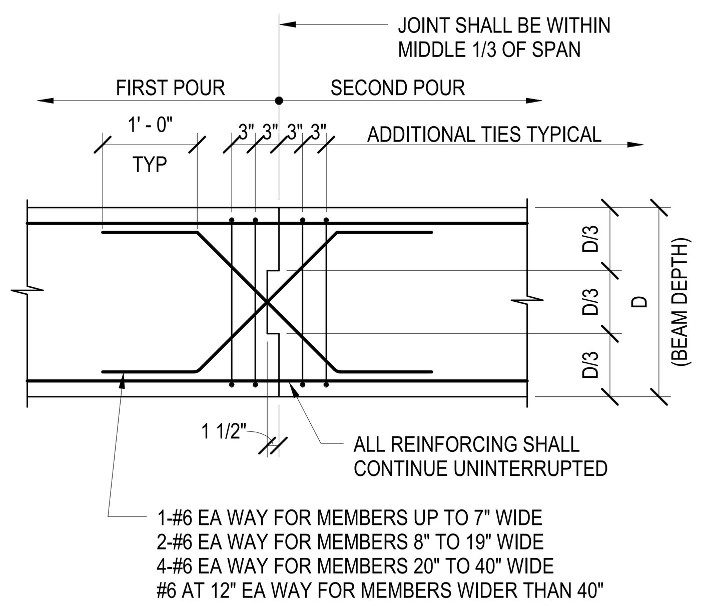

CONCRETE BEAM AND GIRDER CONSTRUCTION JOINT 5

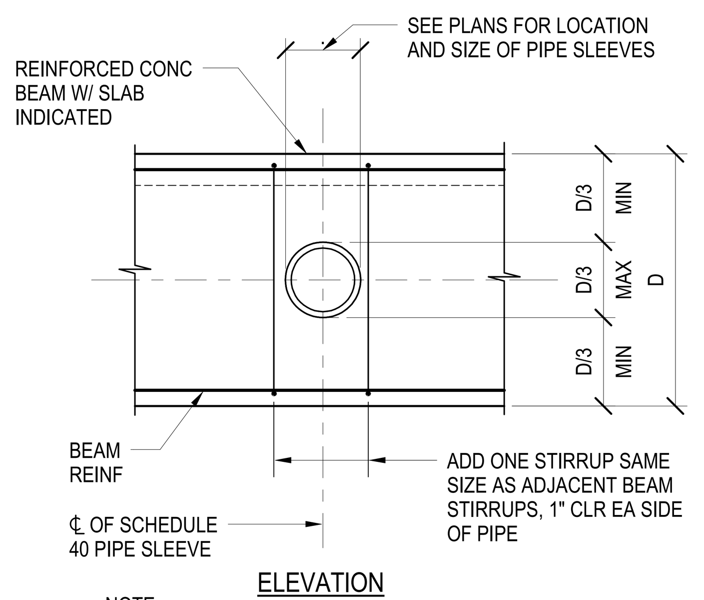

NOTE:
PENETRATIONS THRU BEAMS ARE PERMITTED ONLY WITH THE REVIEW OF THE STRUCTURAL ENGINEER.

PIPE SLEEVE THROUGH CONCRETE BEAM 10

TENSION DEVELOPMENT LENGTH SCHEDULE (L_d)

BAR SIZE	f'c=3000 PSI		f'c=4000 PSI		f'c=5000 PSI		f'c=6000 PSI		f'c=7000 PSI		f'c=8000 PSI	
	TOP BARS	OTHER BARS	TOP BARS	OTHER BARS	TOP BARS	OTHER BARS	TOP BARS	OTHER BARS	TOP BARS	OTHER BARS	TOP BARS	OTHER BARS
#3	22	17	19	15	17	13	15	12	14	12	13	12
#4	29	22	25	19	22	17	20	16	19	15	18	14
#5	36	28	31	24	28	22	25	20	24	18	22	17
#6	43	33	37	29	33	26	31	24	28	22	26	20
#7	63	48	54	42	49	37	44	34	41	32	38	30
#8	72	55	62	48	55	43	51	39	47	36	44	34
#9	81	62	70	54	63	48	57	44	53	41	49	38
#10	91	70	79	61	70	54	64	49	59	46	56	43
#11	101	78	87	67	78	60	71	55	66	51	62	48
#14	121	93	105	81	94	72	86	66	79	61	74	57
#18	161	124	139	107	125	96	114	88	106	81	99	76

BAR SPLICE LENGTH SCHEDULE

BAR SIZE	f'c=3000 PSI		f'c=4000 PSI		f'c=5000 PSI		f'c=6000 PSI		f'c=7000 PSI		f'c=8000 PSI	
	TOP BARS	OTHER BARS	TOP BARS	OTHER BARS	TOP BARS	OTHER BARS	TOP BARS	OTHER BARS	TOP BARS	OTHER BARS	TOP BARS	OTHER BARS
#3	28	22	24	19	22	17	20	16	18	16	17	16
#4	37	29	32	25	29	22	26	20	25	19	23	18
#5	47	36	40	31	36	28	33	25	31	24	29	22
#6	56	43	48	37	43	33	40	31	37	28	34	26
#7	81	63	70	54	63	49	58	44	53	41	50	38
#8	93	72	80	62	72	55	66	51	61	47	57	44
#9	105	81	91	70	81	63	74	57	69	53	64	49
#10	118	91	102	79	91	70	83	64	77	59	72	56
#11	131	101	113	87	101	78	93	71	86	66	80	62
#14	SEE NOTE #12											
#18	SEE NOTE #12											

NOTES:
1. LAP SPLICES ARE SHOWN ON DRAWINGS. WHERE NO LAP LENGTH IS SHOWN, USE THIS SCHEDULE.
2. BAR SPLICE SCHEDULE BASED ON CASE #1, LAP CLASS B
3. C-C BARS MUST BE $3.0d_b$ MIN BY CODE = CASE 1
4. BAR COVER ON BEAMS & COLUMNS 1 1/2" + 1/2" = 2" > d_b = CASE 1 REQUIRED LAP LENGTH.

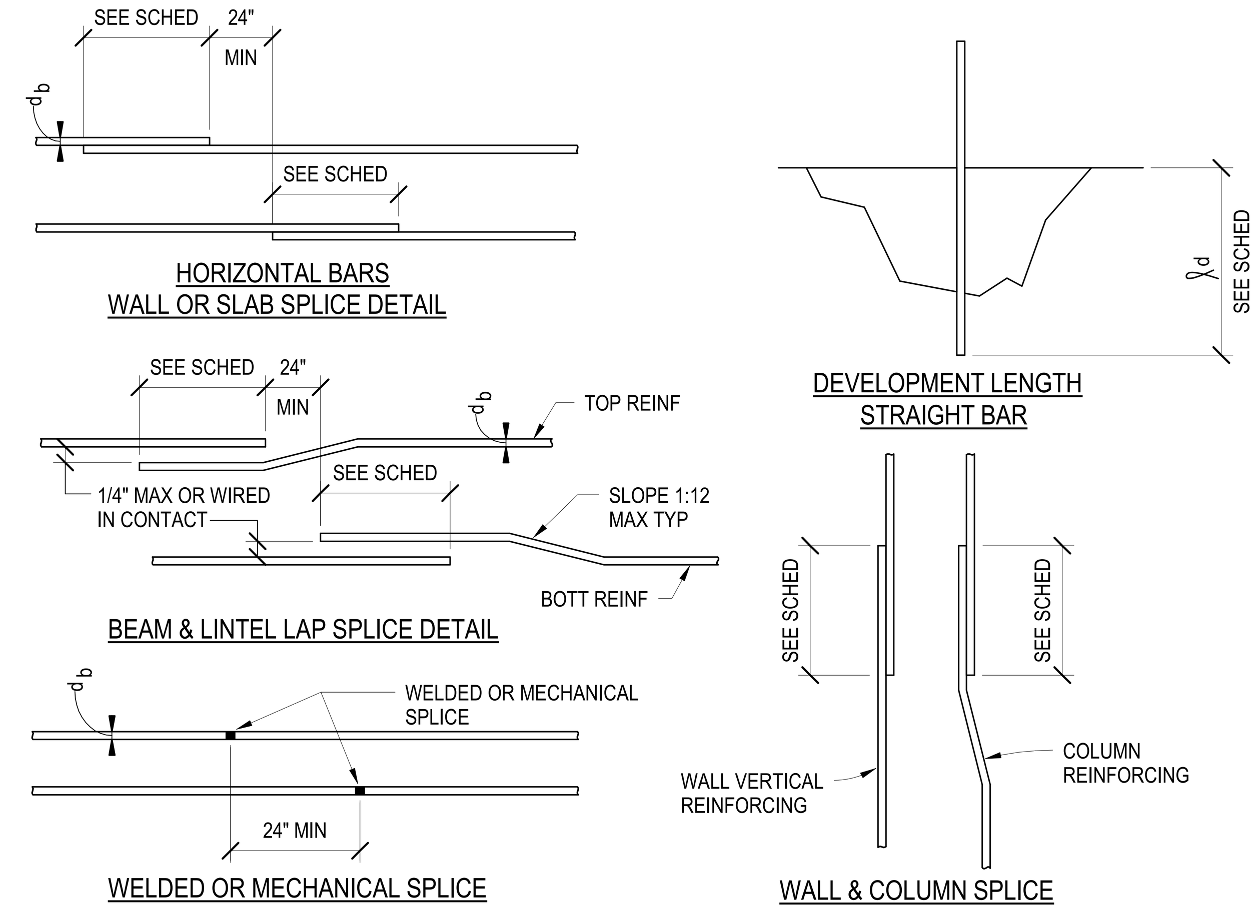

5. TABULATED VALUES ARE IN INCHES AND ARE BASED ON GRADE 60 REINFORCING (NOT COATED), NORMAL WEIGHT CONCRETE PER ACI 318-2008. USE THESE VALUES ONLY WHERE LENGTHS ARE NOT INDICATED ON THE DWGS.
6. TOP BARS ARE HORIZONTAL BARS SO PLACED THAT MORE THAN 12" OF CONCRETE IS CAST IN THE MEMBER BELOW THE BAR.
7. THE SMALLER BAR LAP LENGTH SHALL BE USED WHEN SPLICING DIFFERENT SIZE BARS.
8. THE CONTRACTOR, AT HIS OPTION, MAY USE A BUTT WELDED SPLICE, OR APPROVED MECHANICAL IN LIEU OF THE LAP SPLICE SHOWN-SEE TYPICAL WELDED SPLICE DETAIL.
9. ALL DETAILING AND PLACING OF REINFORCING SHALL COMPLY WITH THE PLANS AND DETAILS.
10. BUNDLED BAR SPLICES:
   a. INDIVIDUAL BAR SPLICES WITHIN THE BUNDLE SHALL
   b. NOT OVERLAP EACH OTHER.
   c. INCREASE LAP LENGTH 33% AT FOUR BAR BUNDLES
11. USE BUTT-WELDED SPLICE OR APPROVED MECHANICAL SPLICE TO #14 AND #18 BARS.

CONCRETE REINFORCING DEVELOPMENT LENGTH AND SPLICE LENGTH SCHEDULE 7

NOTE: FOR SIZE AND SPACING OF ALL TIES AND STIRRUPS, REFER TO SCHEDULE AND/OR DETAILS TYPICAL.

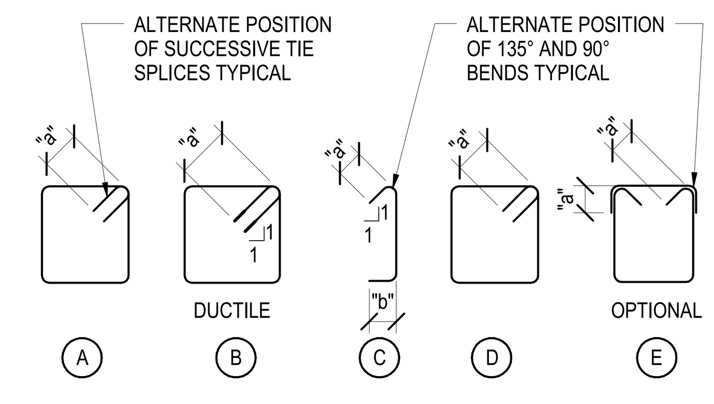

DIMENSION "a" FOR #5 TIES & SMALLER = 6db, 3" MIN
FOR #6-#8 TIES = 6db
DIMENSION "b" FOR #5 TIES & SMALLER = 6db, 3" MIN
FOR #6-#8 TIES = 12db

TYPICAL COLUMN TIES AND BEAM STIRRUPS 1

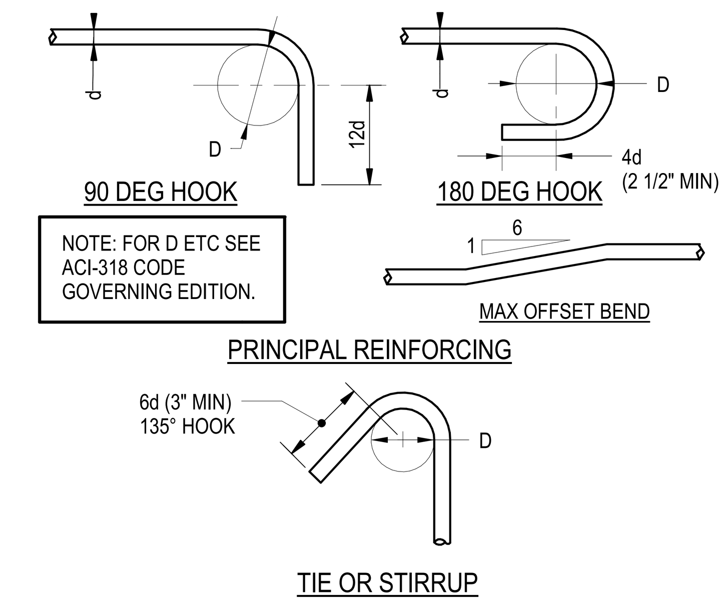

NOTE: FOR D ETC SEE ACI-318 CODE GOVERNING EDITION.

NOTES: 1. ALL BENDS SHALL BE MADE COLD
2. #14 & #18 BARS SHALL BE BEND-TESTED AND APPROVED PRIOR TO BENDING

BAR BENDS 6

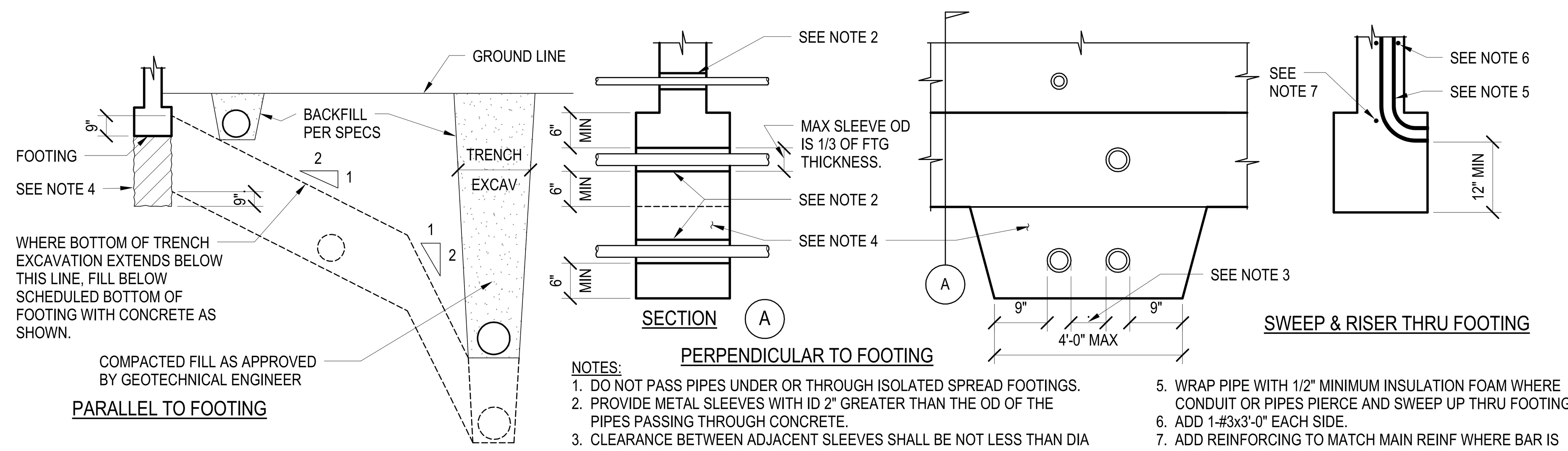

NOTES:
1. DO NOT PASS PIPES UNDER OR THROUGH ISOLATED SPREAD FOOTINGS.
2. PROVIDE METAL SLEEVES WITH ID 2" GREATER THAN THE OD OF THE PIPES PASSING THROUGH CONCRETE.
3. CLEARANCE BETWEEN ADJACENT SLEEVES SHALL BE NOT LESS THAN DIA OF LARGER SLEEVE OR 6" MINIMUM.
4. FOR PIPES BELOW FOOTINGS, EXCAVATE AS SHOWN AND FILL WITH CONCRETE. THE CONTRACTOR SHALL BE RESPONSIBLE FOR SHORING, SHEATHING OR OTHERWISE MAINTAINING THE SIDES OF THE EXCAVATION FROM CAVE-INS UNTIL ALL BACKFILL IS COMPLETED.
5. WRAP PIPE WITH 1/2" MINIMUM INSULATION FOAM WHERE CONDUIT OR PIPES PIERCE AND SWEEP UP THRU FOOTING.
6. ADD 1-#3x3'-0" EACH SIDE.
7. ADD REINFORCING TO MATCH MAIN REINF WHERE BAR IS CUT AT CHASE. LAP W/ MAIN REINF PER SCHEDULE ON EACH SIDE OF CHASE.
8. THE TERMS "PIPES" & "CONDUITS" ARE SYNONYMS.

PIPE TRENCHES AND PENETRATIONS AT FOOTING 12

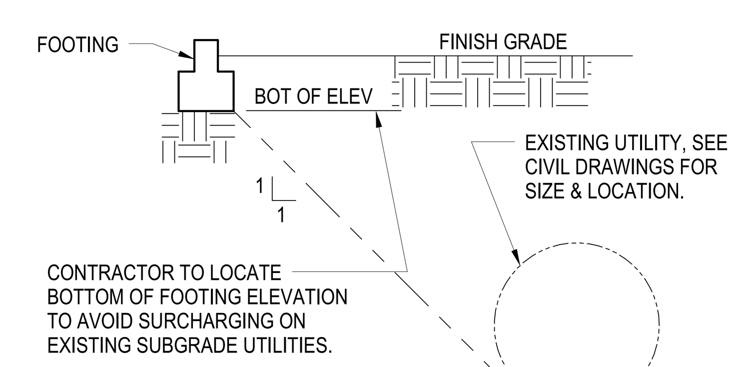

FOOTING PARALLEL TO EXISTING UTILITY 11

3/4" = 1'-0"

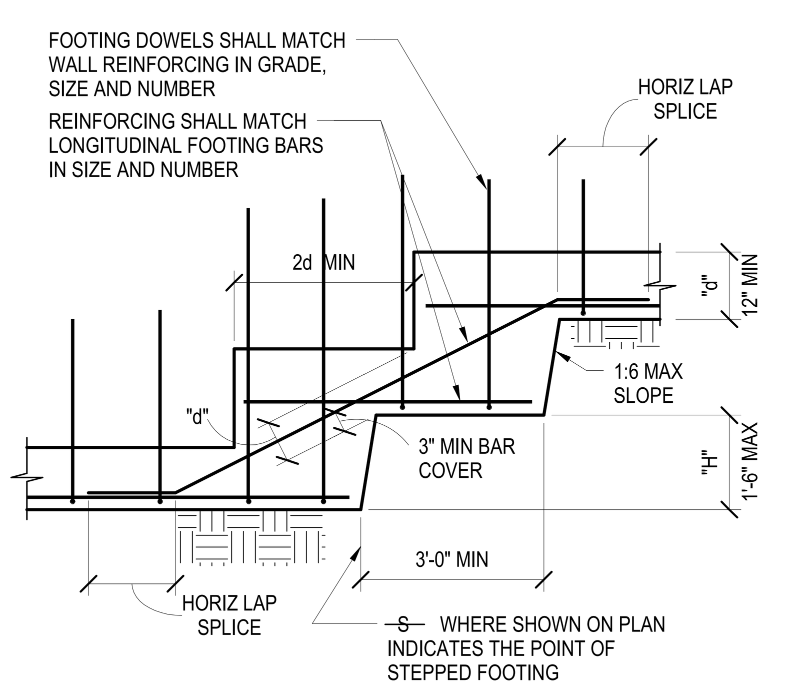

STEPPED FOOTING 18

3/4" = 1'-0"

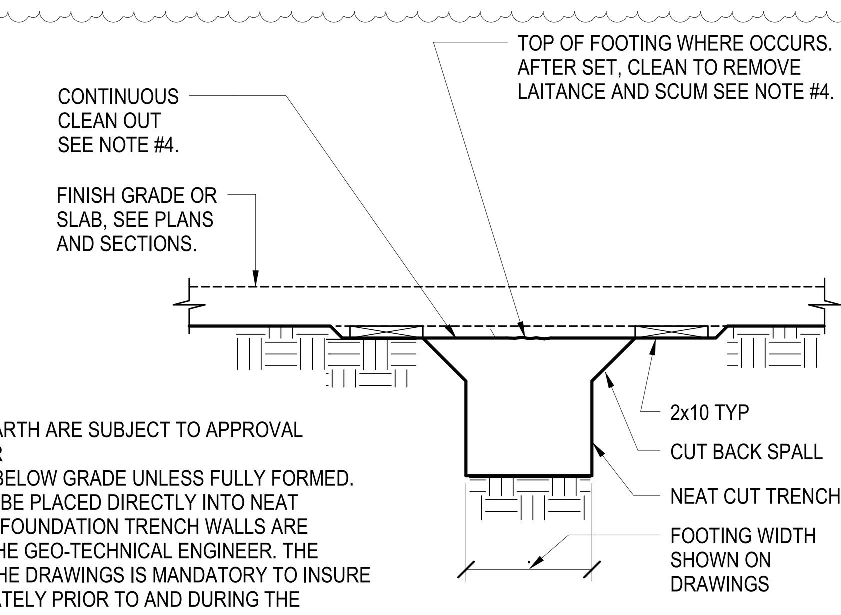

NOTES:
1. FOOTING POURED AGAINST EARTH ARE SUBJECT TO APPROVAL OF GEO-TECHNICAL ENGINEER
2. FORMWORK NOT PERMITTED BELOW GRADE UNLESS FULLY FORMED.
3. FOUNDATION CONCRETE MAY BE PLACED DIRECTLY INTO NEAT EXCAVATIONS PROVIDED THE FOUNDATION TRENCH WALLS ARE STABLE AS DETERMINED BY THE GEO-TECHNICAL ENGINEER. THE MIN FORMWORK SHOWN ON THE DRAWINGS IS MANDATORY TO INSURE CLEAN EXCAVATIONS IMMEDIATELY PRIOR TO AND DURING THE PLACING OF CONCRETE.
4. STAKES NOT PERMITTED IN THE FOOTING AREA.

FOOTING POURED AGAINST EARTH 16

CLIENT
CENTERCAL PROPERTIES, LLC

COPYRIGHT:
Any reproduction or distribution for any purpose other than authorized by IBI Group is forbidden. Written dimensions shall have precedence over scaled dimensions. Contractors shall verify and be responsible for all dimensions and conditions on the job and IBI Group shall be informed of any variations from the dimensions and conditions shown on the drawing. Shop drawings shall be submitted to IBI Group for approval before proceeding with fabrication.
COPYRIGHT © 2016 IBI GROUP

ISSUES

NO.	ISSUANCE	STATUS	DATE
1	STRUCTURAL ADDENDUM 1		5/31/2016

SEAL

EXPIRES

SUB CONSULTANT

MARTIN & associates
JOHN A. MARTIN & ASSOCIATES
Structural Engineers
950 S. Grand Avenue
Los Angeles, Calif. 90015
Phone (213) 483-6490
Fax (213) 483-3084
J14261

PRIME CONSULTANT

IBI GROUP
18401 Von Karman Avenue, Suite 110
Irvine, CA 92612 United States
tel +1 949 833 5588 ext 146 fax +1 949 833 5511
ibigroup.com

PROJECT
The Village at Totem Lake - Building A
Kirkland, Washington

PROJECT NO:	J14261
DRAWN BY:	BK
CHKD BY:	JC
SCALE:	AS SHOWN
DATE:	04/27/16

SHEET TITLE
TYPICAL DETAILS

BLDG	SHEET NUMBER	ISSUE
A	S1001	

C:\Users\bkarton\Documents\ATW_Totem_BldgA_S_2016_bkarton.rvt
5/31/2016 2:52:59 PM

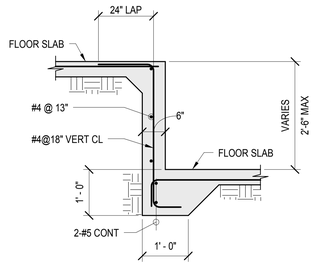

STEP IN SLAB ON GRADE 4

3/4" = 1'-0"

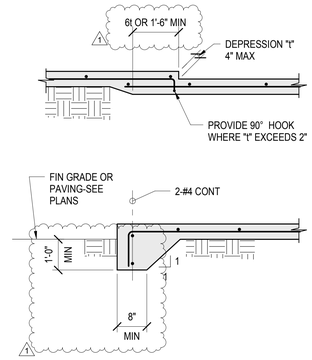

DEPRESSED SLAB ON GRADE AND SLAB EDGE 3

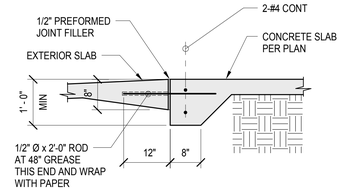

TYPICAL SLAB TOEDOWN 2

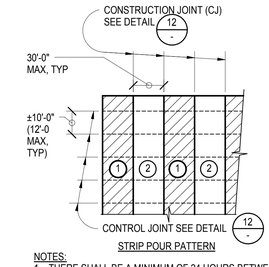

STRIP POUR PATTERN

NOTES:
1. THERE SHALL BE A MINIMUM OF 24 HOURS BETWEEN POURS 1 & 2.
2. CONSTRUCTION JOINTS MUST BE USED AT THE END OF THE DAY'S WORK AND AT EVERY 120 FEET.
3. WHERE STRIP POUR PATTERN IS NOT USED (SLAB POURED MONOLITHICALLY), PROVIDE CONTROL JOINTS @ 12'-0" OC MAXIMUM EACH WAY.

SLAB ON GRADE POUR PATTERN 1

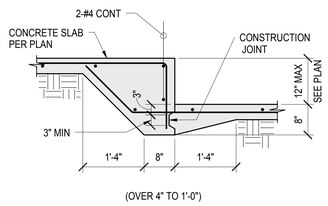

(OVER 4" TO 1'-0")

TYPICAL STEP IN SLAB ON GRADE 9

3/4" = 1'-0"

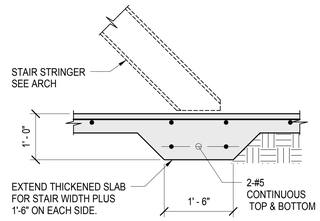

STAIR STRINGER TO SLAB ON GRADE 8

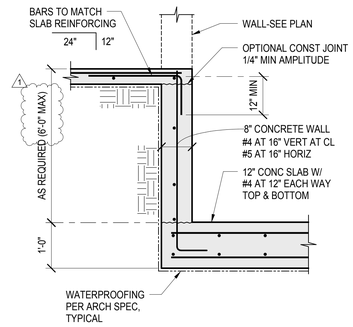

SECTION AT ELEVATOR PIT 7

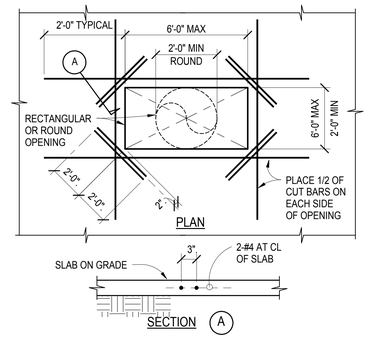

OPENING IN SLAB ON GRADE 6

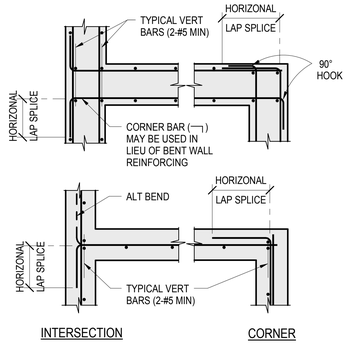

REINFORCING AT WALL INTERSECTIONS 13

3/4" = 1'-0"

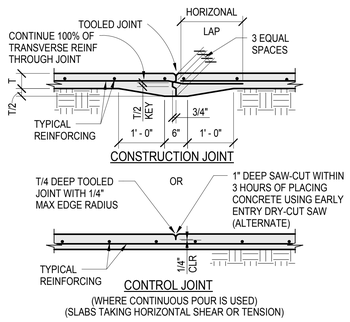

JOINTS IN SLAB ON GRADE 12

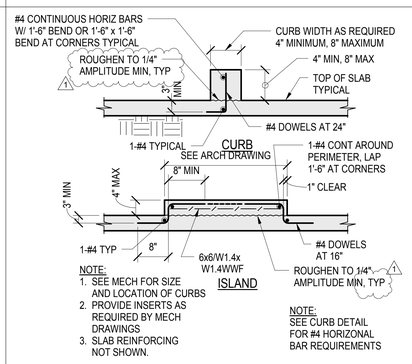

NOTE:
1. SEE MECH FOR SIZE AND LOCATION OF CURBS
2. PROVIDE INSERTS AS REQUIRED BY MECH DRAWINGS
3. SLAB REINFORCING NOT SHOWN.

NOTE:
SEE CURB DETAIL FOR #4 HORIZONAL BAR REQUIREMENTS

CONCRETE CURBS AND ISLANDS 11

CLIENT

CENTERCAL PROPERTIES, LLC

COPYRIGHT:

Any reproduction or distribution for any purpose other than authorized by IBI Group is forbidden. Written dimensions shall have precedence over scaled dimensions. Contractors shall verify and be responsible for all dimensions and conditions on site. Any discrepancies shall be reported to the consultant then the dimensions and conditions shown on the drawing. Shop drawings shall be submitted to IBI Group for approval before proceeding with fabrication.

COPYRIGHT © 2016 IBI GROUP

ISSUES

NO.	ISSUANCE	STATUS	DATE
1	STRUCTURAL ADDENDUM 1		5/31/2016

SEAL

EXPIRES

SUB CONSULTANT

MARTIN & associates
JOHN A. MARTIN & ASSOCIATES
Structural Engineers
950 S. Grand Avenue
Los Angeles, Calif. 90015
Phone (213) 483-6490
Fax (213) 483-3084
J14261

PRIME CONSULTANT

IBI
IBI GROUP
18401 Von Karman Avenue, Suite 110
Irvine, CA 92612 United States
tel +1 949 833 5588 ext 146 fax +1 949 833 5511
ibigroup.com

PROJECT

The Village at Totem Lake - Building A
Kirkland, Washington

PROJECT NO:	J14261
DRAWN BY:	BK
CHKD BY:	JC
SCALE:	AS SHOWN
DATE:	04/27/16

SHEET TITLE

TYPICAL DETAILS

BLDG	SHEET NUMBER	ISSUE
A	S1002	

5/31/2016 2:53:01 PM C:\Users\bkisor\Documents\ATW_Totem_Bldg A_S_2016_bkelsor.rvt

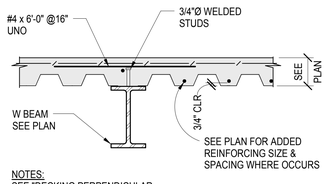

NOTES:
SEE "DECKING PERPENDICULAR TO BEAMS" FOR ADDED NOTES.

METAL DECK PARALLEL TO BEAM (4)

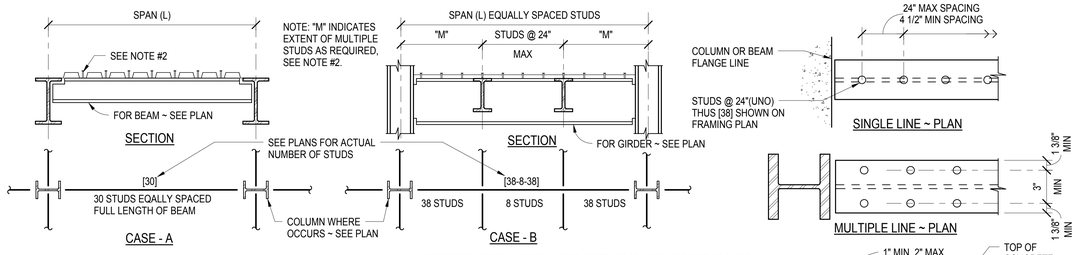

1. ALL HEADED SHEAR STUDS SHALL BE 3/4" DIA. TOP OF ALL STUDS TO BE 1 1/2" (MIN) ABOVE TOP OF STEEL DECK (TYPICAL) SEE PLANS FOR NUMBER.
2. WHERE STUDS FILL EVERY TROUGH THEN REMAINING STUDS SHALL BE INSTALLED IN TWO OR MORE ROWS STARTING AT EACH END OF BEAM OR GIRDER.
3. CASE "A" STUDS ARE EQUALLY SPACED. IF EQUAL SPACING NOT POSSIBLE DUE TO DECK CONFIGURATION, STRUCTURAL ENGINEER MUST BE NOTIFIED.
4. AT FRAMED AREAS WHERE NUMBER OF STUDS IS NOT INDICATED PROVIDE STUDS AT 24" MAX. INCREASE NUMBER OF STUDS PER BEAM (IF REQ'D) TO PROVIDE MAXIMUM STUD SPACING OF 24" EACH BEAM.
5. STUD WELDED THRU METAL DECKING MAY BE SUBSTITUTED FOR TYPICAL PLUG WELD
6. MAINTAIN 1" CLEARANCE AROUND ALL STUDS FOR PROPER EMBEDMENT.
7. STUDS TO EXTEND AS FAR AS STANDARD STUD LENGTHS ALLOW INTO TOPPING SLAB, UNO.

WELDED STUD LAYOUTS (1)

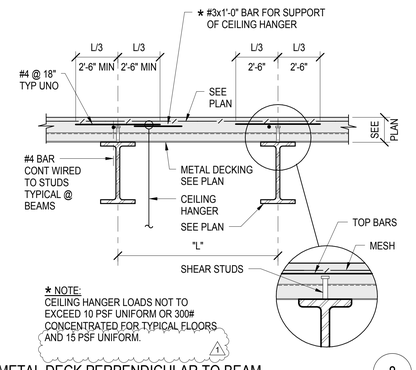

* NOTE:
CEILING HANGER LOADS NOT TO EXCEED 10 PSF UNIFORM OR 300# CONCENTRATED FOR TYPICAL FLOORS AND 15 PSF UNIFORM.

METAL DECK PERPENDICULAR TO BEAM (8)

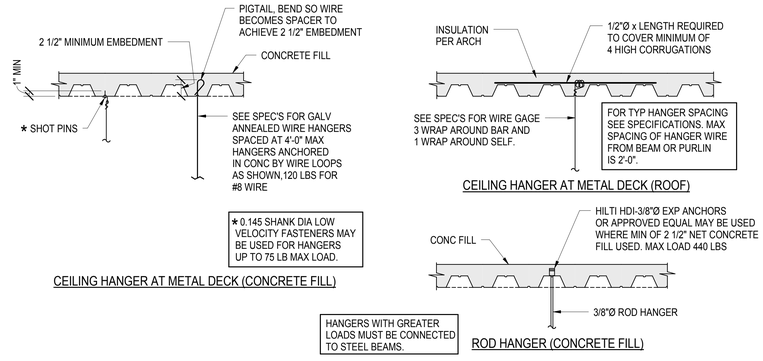

HANGER DETAILS (6)

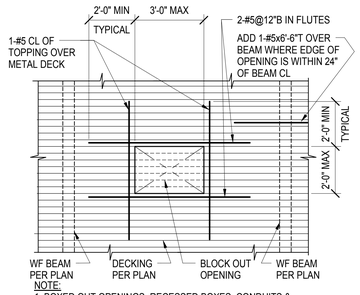

NOTE:
1. BOXED OUT OPENINGS, RECESSED BOXES, CONDUITS & PIPE SLEEVED CLUSTERS, CLOSER THAN 3" OC SHALL BE TREATED AS SLAB OPENINGS.
2. CUT DECK OPENING AFTER CONCRETE HAS ATTAINED 28 DAY DESIGN STRENGTH

UNFRAMED FLOOR OPENING WITH CONCRETE FILL (13)

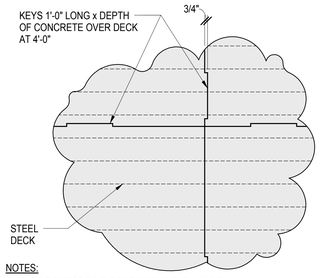

NOTES:
1. SLAB REINFORCING CONTINUOUS THRU JOINT.
2. CONSTRUCTION JOINT LOCATION TO BE SUBMITTED FOR REVIEW.
3. LIMIT CONC POUR RATIO TO 2 MAX:1 (LENGTH TO WIDTH)

CONSTRUCTION JOINT IN CONCRETE SLAB ON COMPOSITE METAL DECK (12)

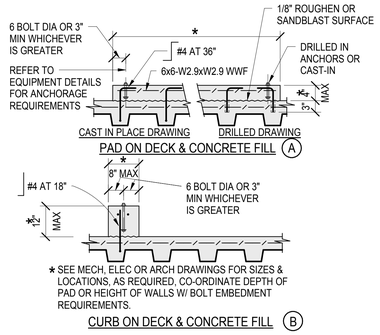

* SEE MECH, ELEC OR ARCH DRAWINGS FOR SIZES & LOCATIONS, AS REQUIRED, CO-ORDINATE DEPTH OF PAD OR HEIGHT OF WALLS W/ BOLT EMBEDMENT REQUIREMENTS.

CURB ON DECK & CONCRETE FILL (B)

CONCRETE EQUIPMENT SUPPORTS (11)

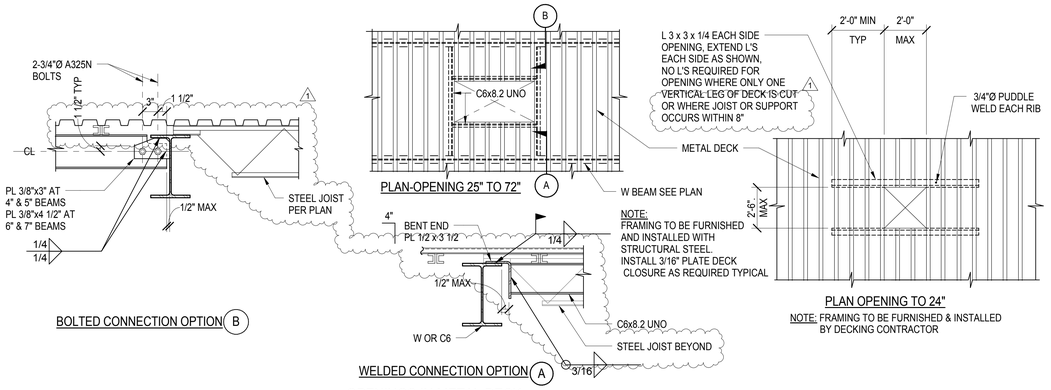

OPENINGS IN METAL DECK (18)

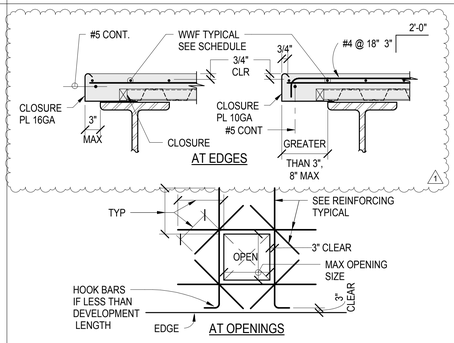

TOPPING TRIM REINFORCING (17)

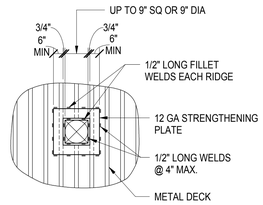

REINFORCED ROOF DECK OPENING UP TO 9" MAX (16)

CLIENT

CENTERCAL PROPERTIES, LLC

COPYRIGHT:

Any reproduction or distribution for any purpose other than authorized by IBI Group is forbidden. Written dimensions shall have precedence over scaled dimensions. Contractors shall verify and be responsible for all dimensions and conditions on site. IBI Group shall be notified of any variations from the dimensions and conditions shown on the drawing. Shop drawings shall be submitted to IBI Group for approval before proceeding with fabrication.

COPYRIGHT © 2016 IBI GROUP

ISSUES

NO.	ISSUANCE	STATUS	DATE
1	STRUCTURAL ADDENDUM 1		5/31/2016

SEAL

EXPIRES

SUB CONSULTANT

JOHN A. MARTIN & ASSOCIATES
Structural Engineers
950 S. Grand Avenue
Los Angeles, Calif. 90015
Phone (213) 483-6490
Fax (213) 483-3084
J14261

PRIME CONSULTANT

IBI GROUP
18401 Von Karman Avenue, Suite 110
Irvine, CA 92612 United States
tel +1 949 833 5588 ext 146 fax +1 949 833 5511
ibigroup.com

PROJECT

The Village at Totem Lake - Building A
Kirkland, Washington

PROJECT NO:	J14261
DRAWN BY:	BK
CHK'D BY:	JC
SCALE:	AS SHOWN
DATE:	04/27/16

SHEET TITLE

TYPICAL DETAILS

BLDG	SHEET NUMBER	ISSUE
A	S1003	

5/31/2016 2:53:02 PM C:\Users\bkirser\Documents\ATW_Totem_Bldg A_S_2016_bkirser.rvt

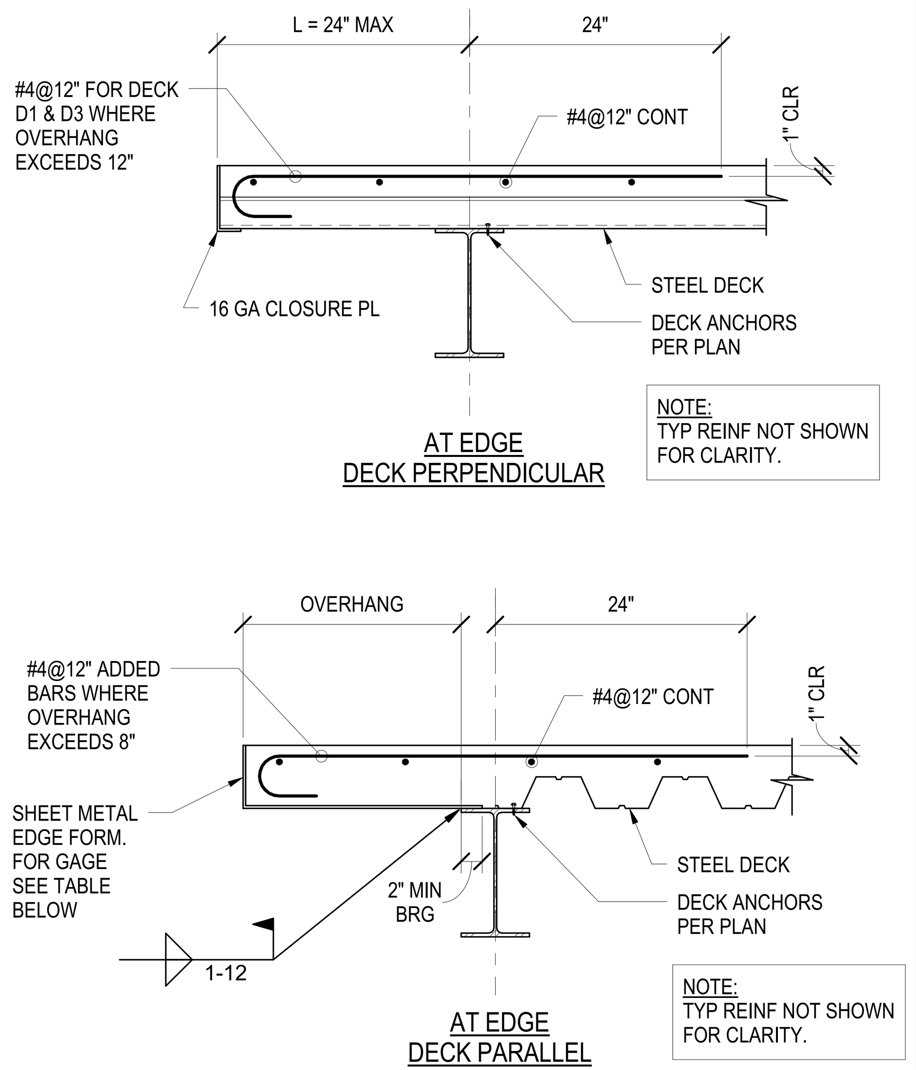

ALLOWED OVERHANG						
SLAB DEPTH	EDGE FORM GAGE					
	20 GA	18 GA	16 GA	14 GA	12 GA	10 GA
4 1/2"	0"	>0"-2"	>2"-4"	>4"-6"	>6"-9"	>9"-11"

TYP DECK EDGE AT FLOOR 10

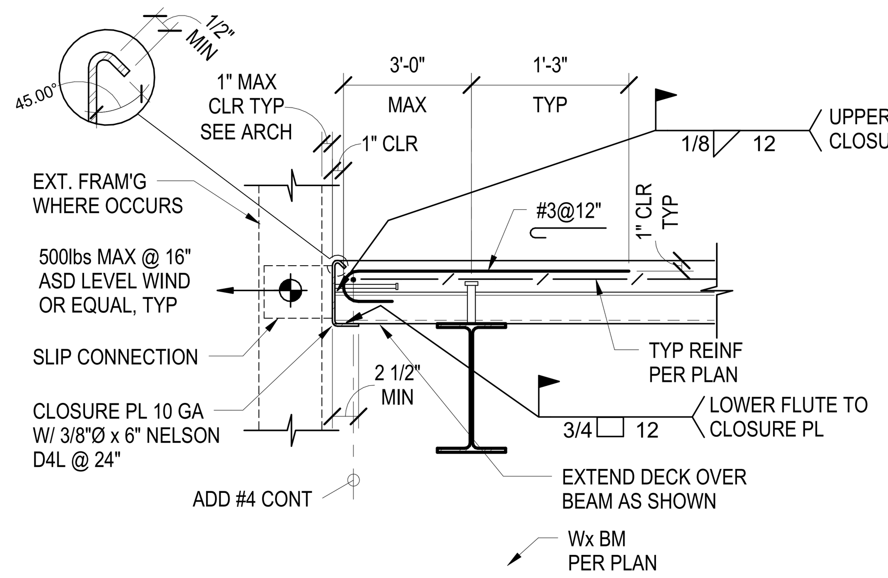

DECK PERPENDICULAR TO EDGE BEAM (SLIP CONNECTION ONLY) A

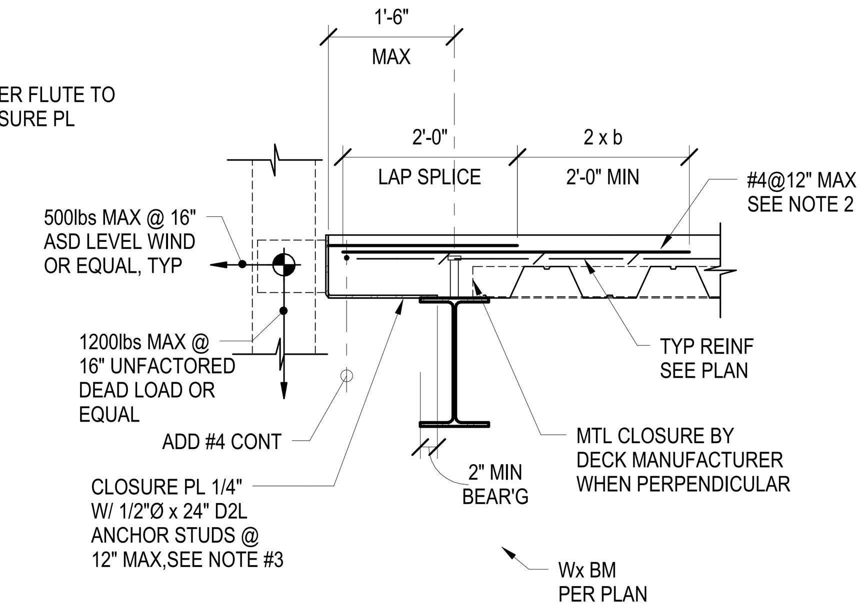

DECK PARALLEL OR PERPENDICULAR TO EDGE BEAM B

SEE A/- FOR ADDITIONAL INFORMATION

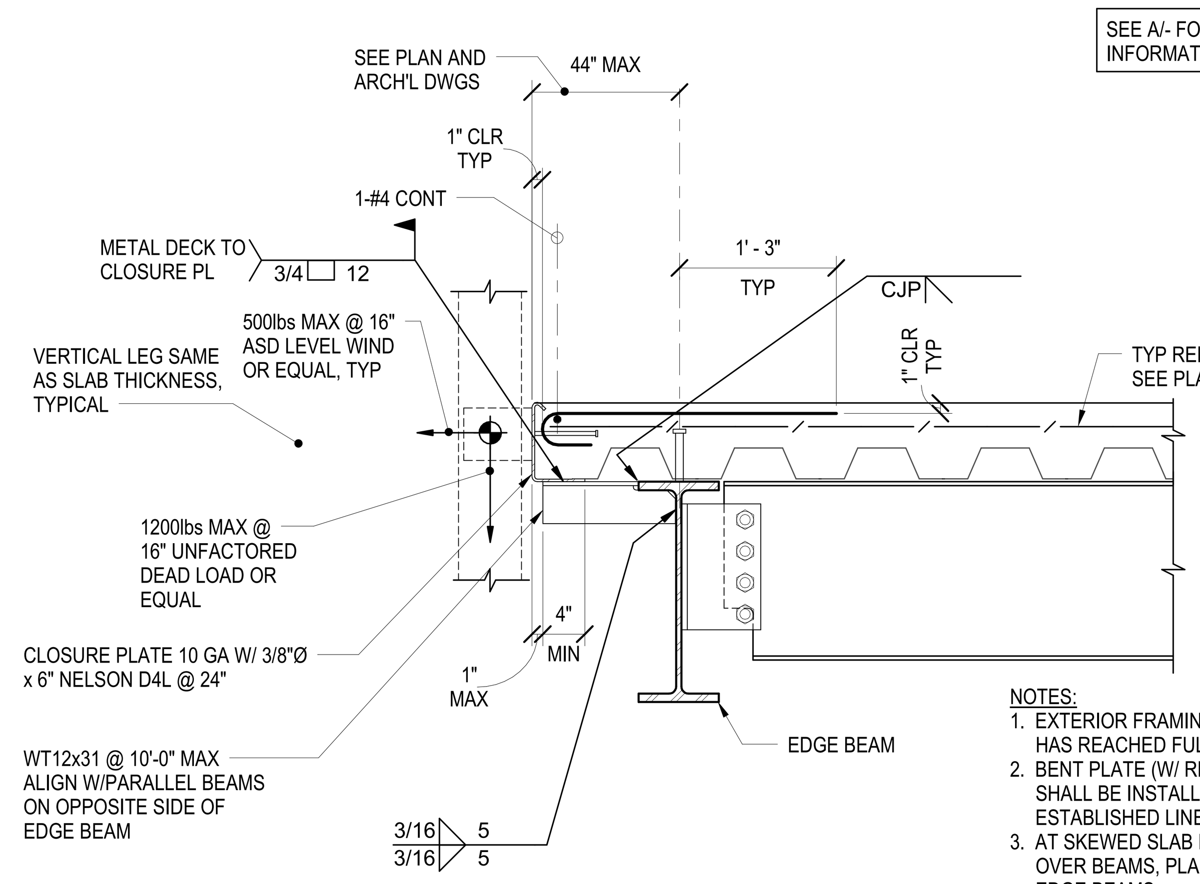

DECK PARALLEL TO SLAB EDGE C

NOTES:
1. EXTERIOR FRAMING SHALL NOT BE INSTALLED UNTIL CONCRETE HAS REACHED FULL COMPRESSIVE STRENGTH.
2. BENT PLATE (W/ REBAR STUDS) AT ALL SPANDREL SLAB BEAMS SHALL BE INSTALLED IN FIELD TO AN INSTRUMENT ESTABLISHED LINE.
3. AT SKEWED SLAB EDGES, WHERE DECK RUNS DIAGONALLY OVER BEAMS, PLACE REINFORCING BARS PERPENDICULAR TO EDGE BEAMS
4. ALL DEFORMED BAR ANCHOR STUDS SHALL BE WELDED W/ AUTOMATICALLY TIMED STUD WELDING EQUIPMENT IN THE FIELD.

TYP DECK EDGE AT ROOF 8

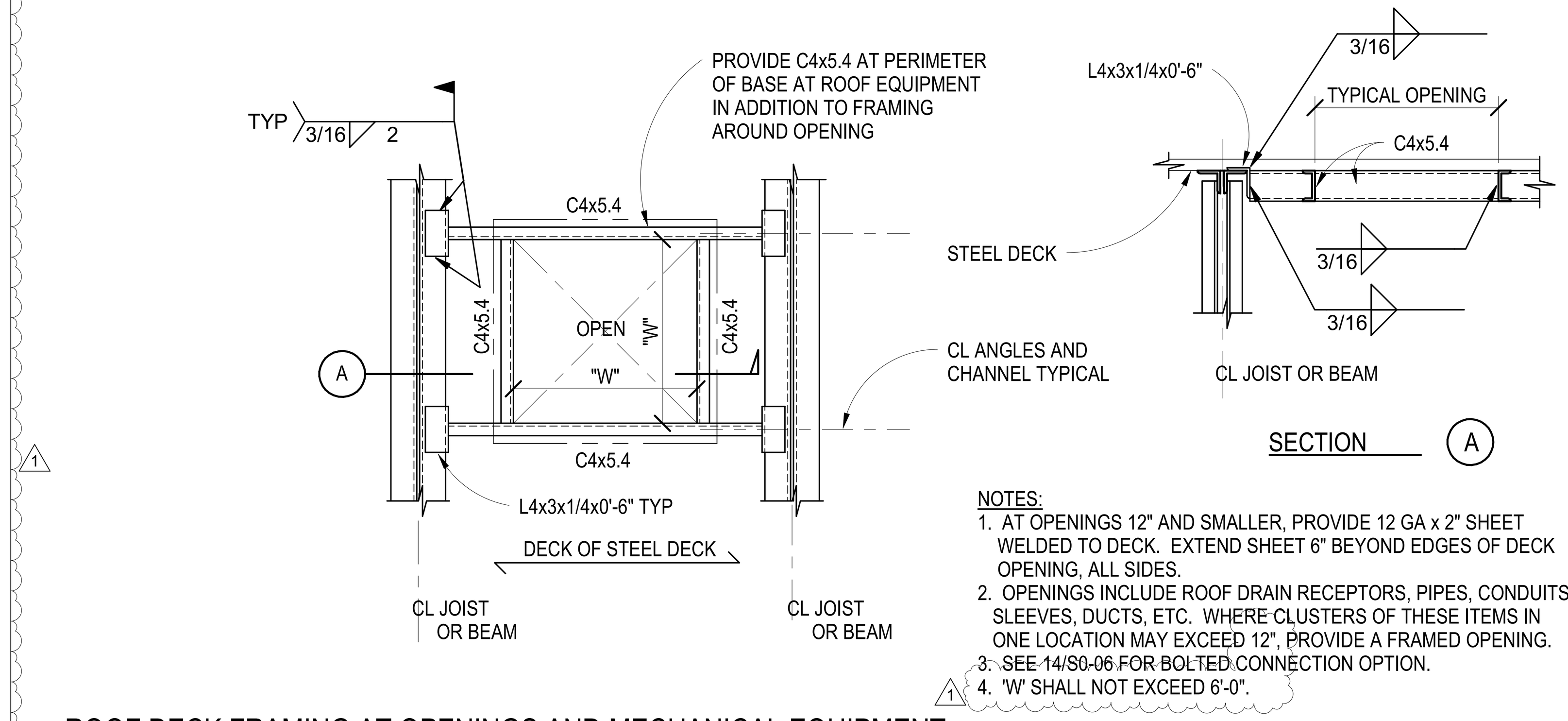

NOTES:
1. AT OPENINGS 12" AND SMALLER, PROVIDE 12 GA x 2" SHEET WELDED TO DECK. EXTEND SHEET 6" BEYOND EDGES OF DECK OPENING, ALL SIDES.
2. OPENINGS INCLUDE ROOF DRAIN RECEPTORS, PIPES, CONDUITS, SLEEVES, DUCTS, ETC. WHERE CLUSTERS OF THESE ITEMS IN ONE LOCATION MAY EXCEED 12", PROVIDE A FRAMED OPENING.
3. SEE 14/S0-06 FOR BOLTED CONNECTION OPTION.
4. 'W' SHALL NOT EXCEED 6'-0".

ROOF DECK FRAMING AT OPENINGS AND MECHANICAL EQUIPMENT 1

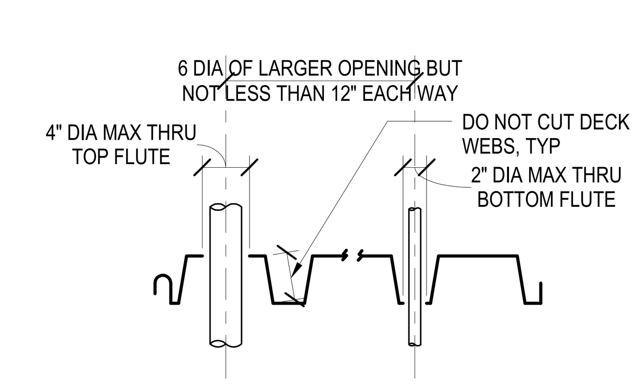

TYPE B DECK

IF OPENING ARE CLOSER OR LARGER THAN SHOWN, REINFORCE DECK - SEE OTHER DETAILS

UNREINFORCED OPENING AT METAL DECK WITHOUT TOPPING 7

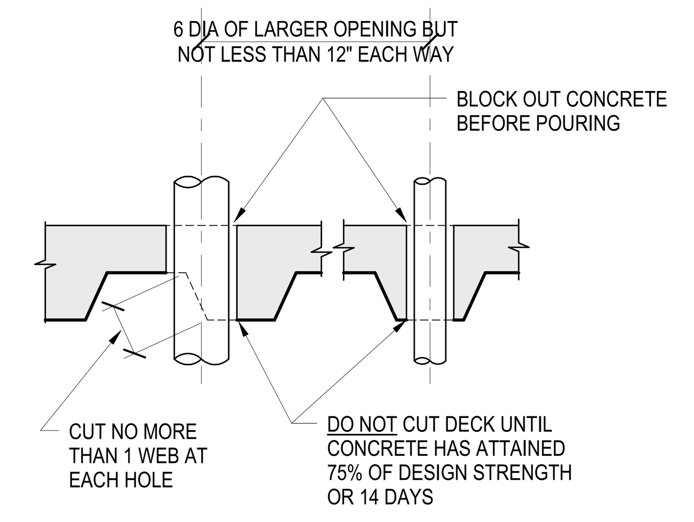

IF OPENING ARE CLOSER OR LARGER THAN SHOWN, REINFORCE DECK - SEE OTHER DETAILS

UNREINFORCED OPENING AT METAL DECK WITH CONCRETE TOPPING 6

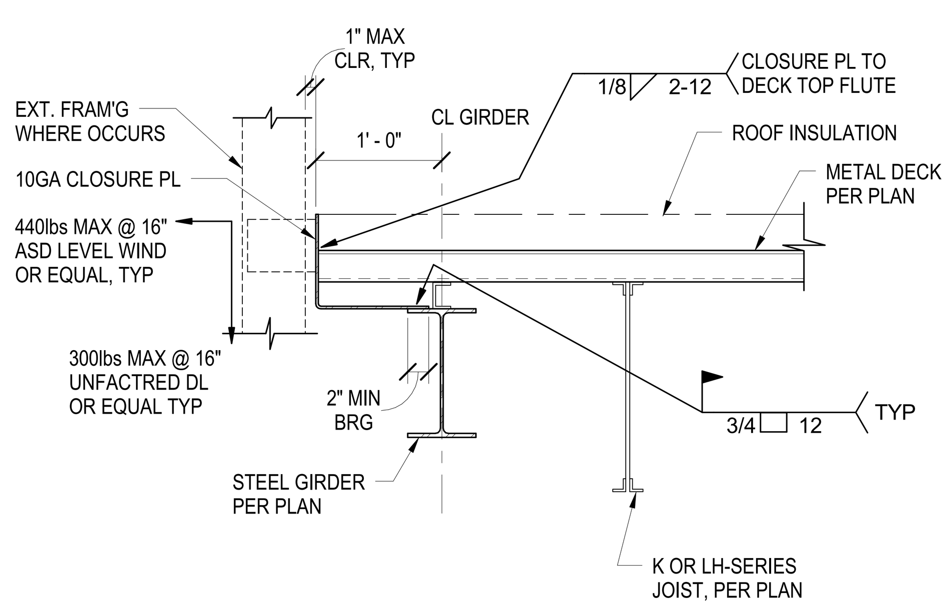

DECK PERPENDICULAR TO EDGE BEAM A

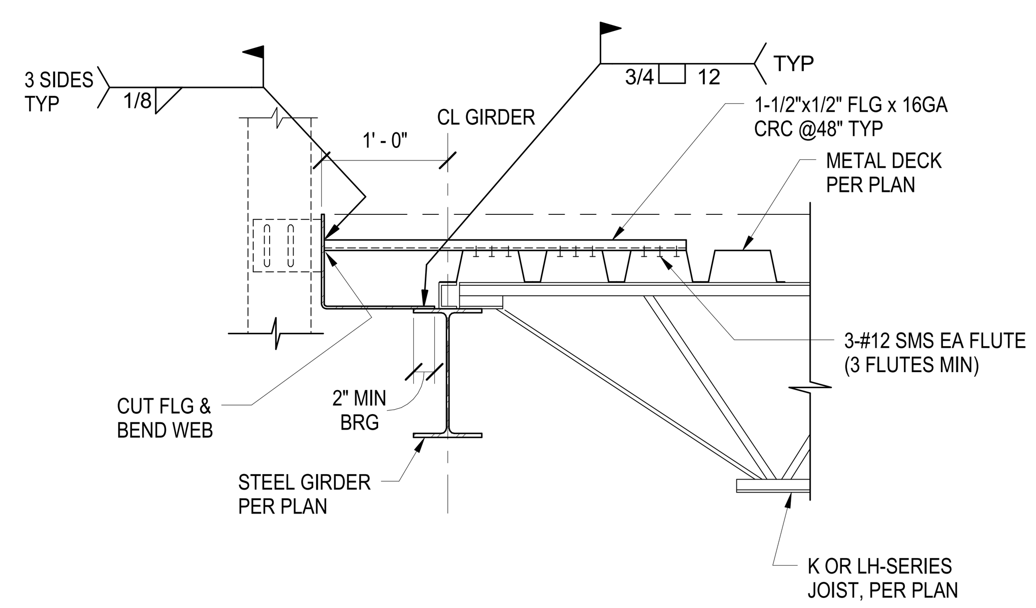

DECK PARALLEL TO EDGE BEAM - SLIP CONNECTION NO KICKER B

TYPICAL DECK EDGE AT ROOF 13

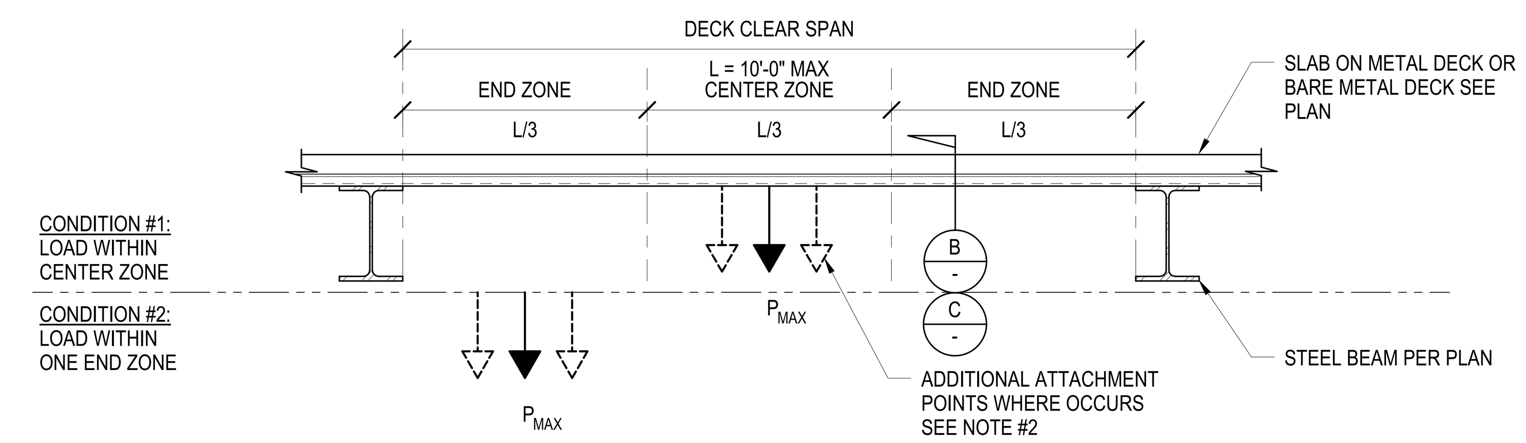

LOADING ZONES ON DECK SPAN BETWEEN BEAMS A

NOTES:
1. P_{MAX} REPRESENTS THE TOTAL SERVICE LEVEL LOAD THAT CAN BE APPLIED TO THE UNDERSIDE OF A DECK IN ONE ZONE (SEE DETAIL 'A').
2. P_{MAX} CAN BE A SINGLE LOAD OR THE TOTAL LOAD FROM MULTIPLE ATTACHMENTS IN ONE ZONE.
3. WHERE MULTIPLE ATTACHMENTS OCCUR OVER MULTIPLE ZONES ON THE SAME SPAN, THE TOTAL LOAD SHALL NOT EXCEED P_{MAX} FOR THE CONDITION #1.
4. P_{MAX} LOADS SHALL BE HALVED WHEN IT OCCURS UNDER MECHANICAL UNITS.
5. P_{MAX} CAPACITIES MAY BE LIMITED BY THE TENSION CAPACITY OF THE ATTACHMENT WHICH SHALL BE DETERMINED BY OTHERS.

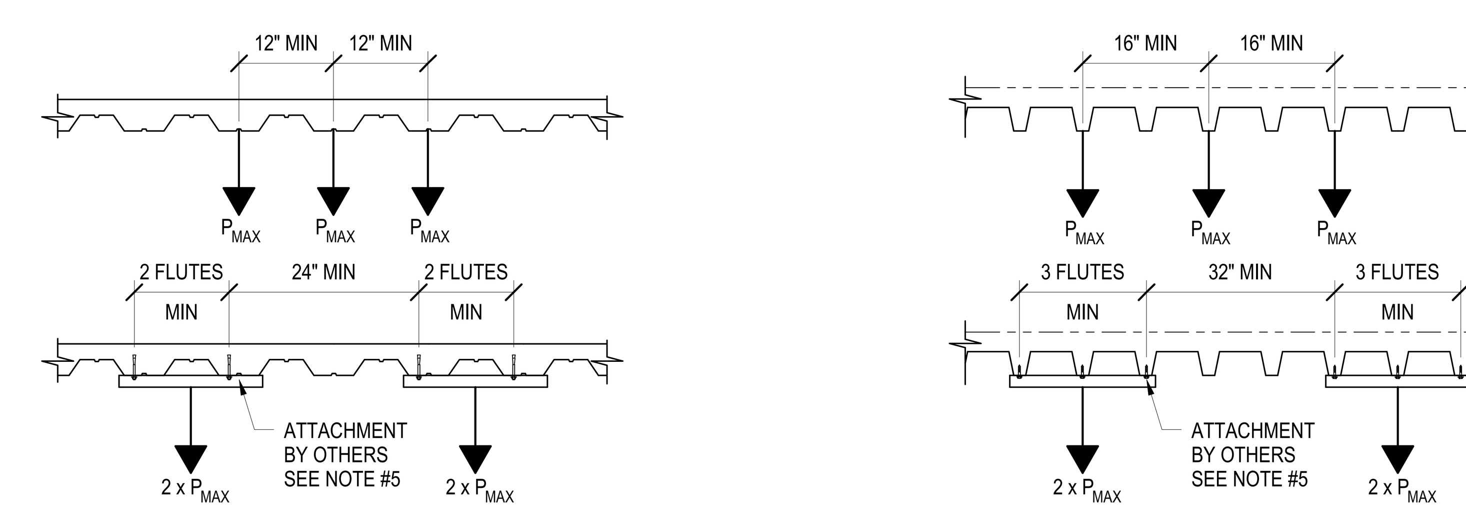

P_{MAX} GRAVITY ONLY		
MAX SPAN	VERCO W2 FORMLOK 20 GA GALV WITH 3 1/4" LW CONC TOPPING	
	CONDITION 1	CONDITION 1
10'-0"	500	550
9'-0"	600	700
8'-0"	750	850
7'-0"	850	950
6'-0"	850	950

P_{MAX} GRAVITY + SEISMIC		
MAX SPAN	VERCO W2 FORMLOK 20 GA GALV WITH 3 1/4" LW CONC TOPPING	
	CONDITION 1	CONDITION 1
10'-0"	800	900
9'-0"	950	1050
8'-0"	1150	1300
7'-0"	1250	1400
6'-0"	1250	1400

ALLOWABLE POINT LOADING AT CONCRETE TOPPED METAL DECK B

P_{MAX} GRAVITY ONLY		
MAX SPAN	VERCO PLN3 ROOF DECK 18 GA GALV UNSHORED (2 SPANS MIN)	
	CONDITION 1	CONDITION 1
10'-0"	200	250
9'-0"	300	350
8'-0"	350	400
7'-0"	450	500
6'-0"	450	500

P_{MAX} GRAVITY + SEISMIC		
MAX SPAN	VERCO PLN3 ROOF DECK 18 GA GALV UNSHORED (2 SPANS MIN)	
	CONDITION 1	CONDITION 1
10'-0"	300	350
9'-0"	400	450
8'-0"	500	550
7'-0"	600	700
6'-0"	600	700

ALLOWABLE POINT LOADING AT UNTOPPED METAL DECK C

ALLOWABLE POINT LOADING ON STRUCTURAL CONCRETE TOPPED AND UNTOPPED BARE DECKS 16

CLIENT

CENTERCAL PROPERTIES, LLC

COPYRIGHT: Any reproduction or distribution for any purpose other than authorized by IBI Group is forbidden. COPYRIGHT © 2016 IBI GROUP

ISSUES

NO.	ISSUANCE	STATUS	DATE
1	STRUCTURAL ADDENDUM 1		5/31/2016

SEAL

EXPIRES

SUB CONSULTANT

MARTIN & associates
JOHN A. MARTIN & ASSOCIATES Structural Engineers
950 S. Grand Avenue Los Angeles, Calif. 90015
Phone (213) 483-6490 Fax (213) 483-3084
J14261

PRIME CONSULTANT

IBI GROUP
18401 Von Karman Avenue, Suite 110 Irvine, CA 92612 United States
ibigroup.com

PROJECT

The Village at Totem Lake - Building A
Kirkland, Washington

PROJECT NO:	J14261
DRAWN BY:	BK
CHKD BY:	JC
SCALE:	AS SHOWN
DATE:	04/27/16

SHEET TITLE

TYPICAL DETAILS

BLDG A · SHEET NUMBER S1004 · ISSUE

C:\Users\bkenton\Documents\ATW_Totem_BldgA_S_2016_bkenton.rvt
5/31/2016 2:53:03 PM

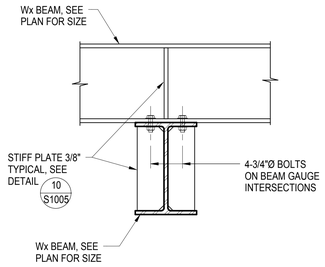

BEAM TO BEAM CONNECTION (5)

3/4" = 1'-0"

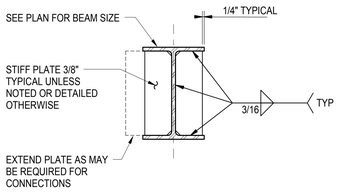

USE LARGER PLATE AND WELD AS MAY BE REQUIRED BY BEAM CONNECTION SCHEDULE

STIFFENER PLATES (10)

3/4" = 1'-0"

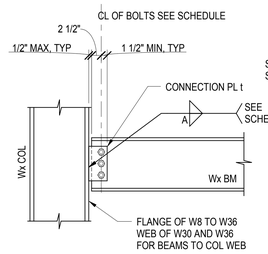

BEAM TO COLUMN FLANGE OR DEEP COLUMN WEB (A)

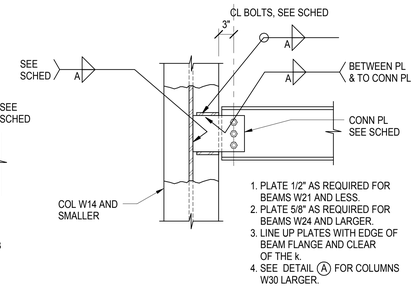

BEAM TO COLUMN WEB (B)

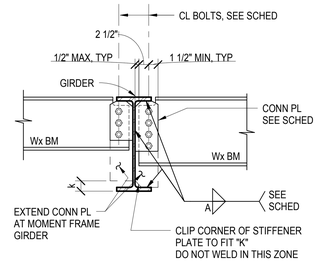

TYPICAL BEAM (C)

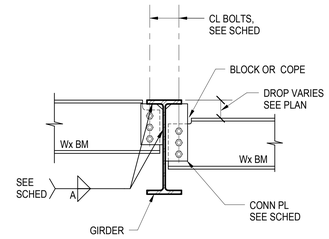

DROPPED BEAM (D)

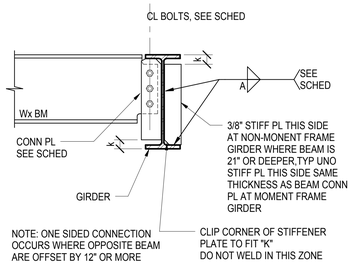

ONE SIDE BEAM CONNECTION (E)

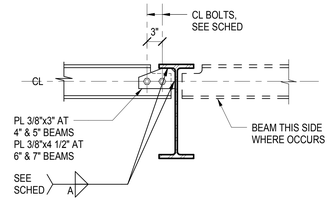

BEAM 4" TO 7" (F)

SIMPLE BEAM CONNECTION SCHEDULE			
SHEAR PL CONNECTION			
MEMBER (DEPTH)	# OF BOLTS	CONNECTION PLATE t	WELD SIZE A
< 8"	2	5/16"	1/4"
8" - 10"	2	5/16"	1/4"
12" - 14"	3	5/16"	1/4"
15" - 16"	4	3/8"	5/16"
18"	5	3/8"	5/16"
20" & 21"	5	3/8"	5/16"
24"	6 - 1"Ø	3/8"	5/16"
27"	7 - 1"Ø	3/8"	5/16"
30" & 33"	8 - 1"Ø	1/2"	3/8"
36"	10 - 1"Ø	1/2"	3/8"

NOTE:

1. FILLET WELD SIZE SHALL BE AS SHOWN UNLESS A GREATER SIZE IS REQUIRED BY AISC TABLE J2.4
2. ALL BOLTS ARE 3/4"Ø (UNLESS NOTED OTHERWISE) AND ARE TO BE A325 BOLTS, SLIP CRITICAL. (SC).
3. BOLT SPACING TO BE 3 TIMES BOLT DIAMETER, 3" MINIMUM, UNLESS NOTED OTHERWISE.
4. DOUBLE ANGLES MAY BE SUBSTITUTED FOR CONNECTOR PLATES, PROVIDED THEY MEET OR EXCEED THE REQUIREMENTS OF THE AISC.
5. BEAMS SLOPED PER PLAN (SHOWN LEVEL FOR CLARITY).

SIMPLE BEAM CONNECTION DETAILS (6)

3/4" = 1'-0"

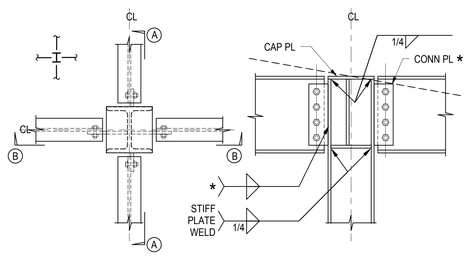

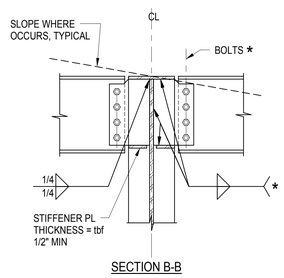

* NOTE: SEE CONNECTION SCHEDULE FOR INFORMATION NOT SHOWN.

TYPICAL BEAM TO COLUMN - ALL SIMPLE CONNECTIONS AT ROOF (14)

3/4" = 1'-0"

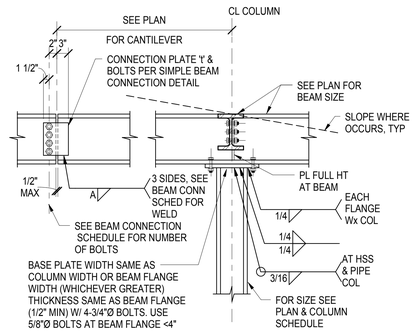

TYPICAL CANTILEVER BEAM DETAIL (13)

3/4" = 1'-0"

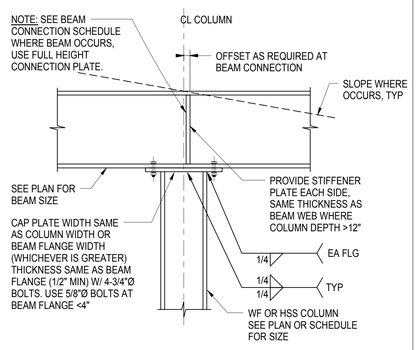

BEAM TO COLUMN DETAIL (12)

3/4" = 1'-0"

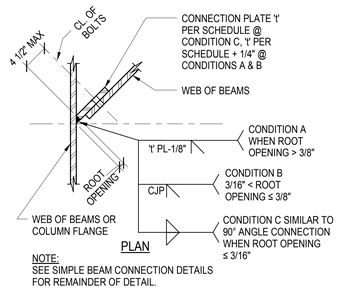

NOTE:
SEE SIMPLE BEAM CONNECTION DETAILS FOR REMAINDER OF DETAIL.

TYPICAL SKEWED BEAM CONNECTION (11)

3/4" = 1'-0"

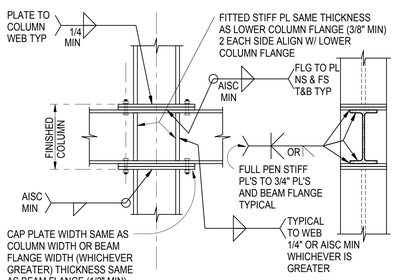

NOTE: ALL WELDS SHALL BE AISC MIN PER AISC 360 J2 WELDS.

INTERRUPED COLUMNS (20)

3/4" = 1'-0"

DRAG BEAM CONNECTION SCHEDULE			
BEAM DEPTH	# OF BOLTS	t PL	d PL
W10	2 ROWS OF 2	1/2"	7"
W14	2 ROWS OF 3	1/2"	9"
W16	2 ROWS OF 4	1/2"	12 1/2"
W18	2 ROWS OF 5	1/2"	15 1/2"
W21	2 ROWS OF 5	1"	16"
W24	2 ROWS OF 6	1"	19"
W27	2 ROWS OF 7	1"	22"

NOTE:
ALL BOLTS SHALL BE A325X TIGHTENED SLIP CRITICAL

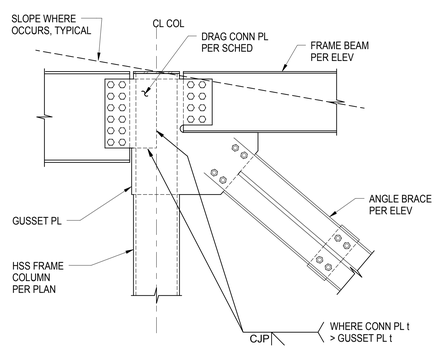

TYPICAL DRAG CONN @ BRACED FRAME

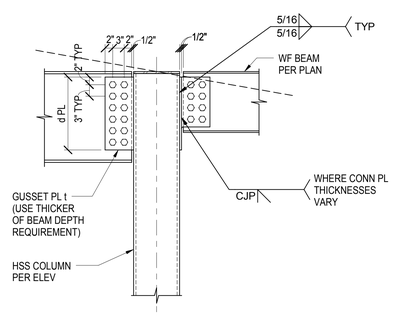

TYPICAL DRAG CONN

TYPICAL DRAG CONNECTION DETAILS (17)

3/4" = 1'-0"

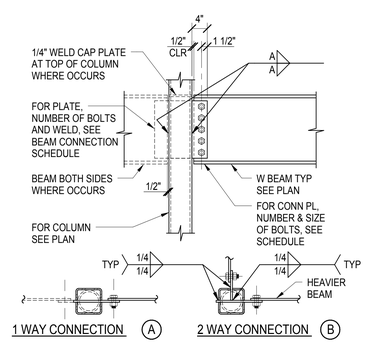

WF BEAM TO HSS AND PIPE COLUMN (16)

3/4" = 1'-0"

CLIENT

CENTERCAL PROPERTIES, LLC

COPYRIGHT:

Any reproduction or distribution for any purpose other than authorized by IBI Group is forbidden. Written dimensions shall have precedence over scaled dimensions. Contractors shall verify and be responsible for all dimensions and conditions on the job, and report any errors or omissions to the consultant then the dimensions and conditions shown on the drawing. Shop drawings shall be submitted to IBI Group for approval before proceeding with fabrication.

COPYRIGHT © 2016 IBI GROUP

ISSUES

NO.	ISSUANCE	STATUS	DATE
1	STRUCTURAL ADDENDUM 1		5/31/2016

SEAL

SUB CONSULTANT

MARTIN & associates
JOHN A. MARTIN & ASSOCIATES
Structural Engineers
950 S. Grand Avenue
Los Angeles, Calif. 90015
Phone (213) 483-6490
Fax (213) 483-3084
J14261

PRIME CONSULTANT

IBI
IBI GROUP
18401 Von Karman Avenue, Suite 110
Irvine, CA 92612 United States
tel +1 949 833 5588 ext 146 fax +1 949 833 5511
ibigroup.com

PROJECT

The Village at Totem Lake - Building A
Kirkland, Washington

PROJECT NO:	J14261
DRAWN BY:	Author
CHKD BY:	Checker
SCALE:	AS SHOWN
DATE:	04/27/16

SHEET TITLE

TYPICAL DETAILS

BLDG	SHEET NUMBER	ISSUE
A	S1005	1

C:\Users\bkreier\Documents\ATW_Totem_Bldg A_S_2016_bkreier.rvt

5/31/2016 2:53:05 PM

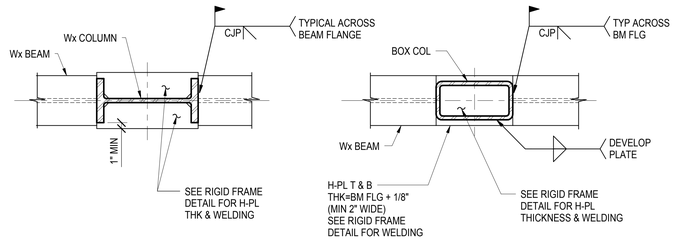

PLAN - BEAM FLANGE WIDER THAN COLUMN FLANGE (4)

3/4" = 1'-0"

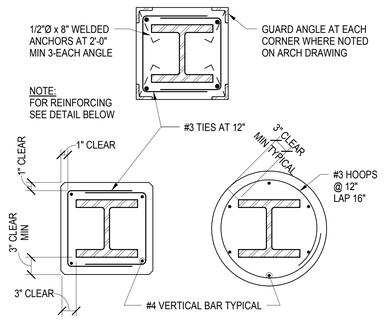

WF COLUMN CONCRETE ENCASED (10)

3/4" = 1'-0"

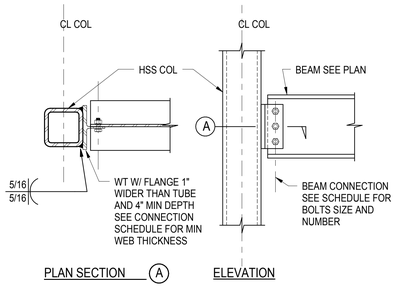

WF BEAM TO SQUARE OR RECTANGLE HSS COLUMN (9)

3/4" = 1'-0"

NOTES:

1. SEE PLANS AND SCHEDULE FOR BEAM & COLUMN SIZES AND COLUMN ORIENTATION. A TRIANGLE AT THE END OF SINGLE STEEL BEAMS & GIRDERS (▷———) INDICATES RIGID CONNECTION CENTERED ON COLUMN CENTERLINE UNO.

2. ABBREVATIONS:
   - H-PL : HORIZONTAL COLUMN STIFFENER PLATES
   - CP : COMPLETE PENETRATION BUTT WELD
   - UNO : UNLESS OTHERWISE NOTED
   - tw : BEAM WEB THICKNESS

3. H-PL: UNO, HORIZONTAL & WEB CONNECTION PLATES SHALL BE THE SAME GRADE MATERIALS AS THE CONNECTING BEAM. COLUMN HORIZONTAL STIFFENER PLATES (H-PL) TO BE AS THICK AS THE THICKEST BEAM FLANGE BEING RIGIDLY CONNECTED TO THE COLUMN FLANGE LESS 1/4". WHERE RIGIDLY CONNECTED BEAMS FRAME INTO THE COLUMN WEB, HORIZONTAL PLATE THICKNESS IS TO BE AT LEAST THE THICKNESS OF THE BEAM FLANGES. TAPER H-PLPER AWS WHERE THICKER PLATE IS USED. PLATES TO BE MIN 1/2" THICK FOR COLUMN DEPTH UP TO 16", 5/8" THICK FOR DEPTHS IN EXCESS OF 16".

4. FILLET WELD SIZES SHALL BE AS SHOWN UNLESS A GREATER SIZE IS REQUIRED BY AISC 360-05 TABLE J2.4.

5. WHERE DOUBLE ROW OF BOLTS ARE REQUIRED, USE MAXIMUM NUMBER POSSIBLE IN FIRST ROW AND BALANCE IN SECOND ROW.

6. a. FULL ULTRASONIC INSPECTION SHALL BE PROVIDED ON ALL COMPLETE PENETRATION GROOVE WELDS CONTAINED IN JOINTS AND SPLICES (TESTED 100 PERCENT).
   THE NONDESTRUCTIVE TESTING RATE FOR AN INDIVIDUAL WELDER OR WELDING OPERATOR MAY BE REDUCED TO 25 PERCENT, PROVIDED THE REJECT RATE IS DEMONSTRATED TO BE 5 PERCENT OR LESS OF THE WELDS TESTED FOR THE WELDER OR WELDING OPERATOR. A SAMPLING OF AT LEAST 40 COMPLETED WELDS FOR REJECT RATE IS DEFINED AS THE NUMBER OF WELDS CONTAINING REJECTABLE DEFECTS DIVIDED BY THE NUMBER OF WELDS COMPLETED. FOR EVALUATING THE REJECT RATE OF CONTINUOUS WELDS OVER 3 FEET IN LENGTH WHERE THE EFFECTIVE THROAT THICKNESS IS 1 INCH OR LESS, EACH 12 INCH INCREMENT OR FRACTION THEREOF SHALL BE CONSIDERED AS ONE WELD. FOR EVALUATING THE REJECT RATE ON CONTINUOUS WELDS OVER 3 FEET IN LENGTH WHERE THE EFFECTIVE THROAT THICKNESS IS GREATER THAN 1 INCH, EACH 6 INCHES OF LENGTH OR FRACTION THEREOF SHALL BE CONSIDERED ONE WELD.
   b. PARTIAL PENETRATION GROOVE WELDS, WHEN USED IN COLUMN SPLICES, SHALL BE TESTED EITHER BY ULTRASONIC TESTING OR RADIOGRAPHY.
   c. BASE METAL THICKER THAN 1 1/2 INCHES, WHEN SUBJECTED TO THROUGH THICKNESS WELD SHRINKAGE STRAINS, SHALL BE ULTRASONICALLY INSPECTED FOR DISCONTINUITIES.

NON-SEISMIC BEAM CONNECTION SCHEDULE

BEAM (DEPTH)	NUMBER OF 1" DIAMETER A325F BOLTS (ALT A490F)	CONN PL t	WELD SIZE A
< 8"	2	3/8"	1/4
8" TO 10"	2	5/16"	1/4
12" TO 14"	3	5/16"	1/4
15" TO 16"	4	3/8"	5/16
18"	4	3/8"	5/16
20" TO 21"	5	1/2"	3/8
24"	6	1/2"	3/8
27"	7	1/2"	3/8
30" TO 33"	8	5/8"	3/8
36"	10	5/8"	3/8
40"	11	5/8"	3/8

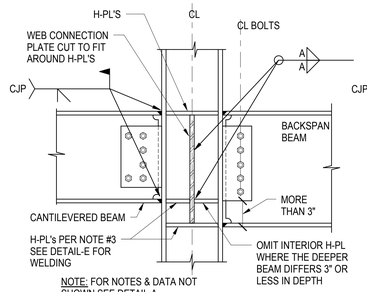

BEAM TO COLUMN FLANGE (B)

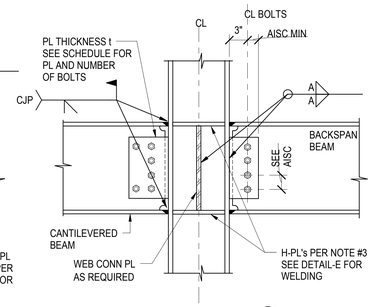

BEAM TO COLUMN FLANGE (A)

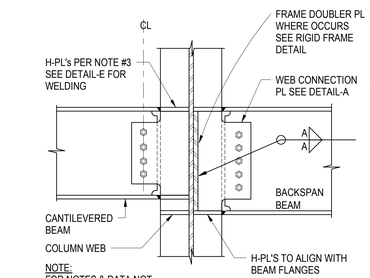

BEAM TO COLUMN WEB (D)

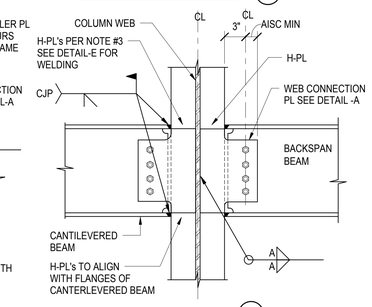

BEAM TO COLUMN WEB (C)

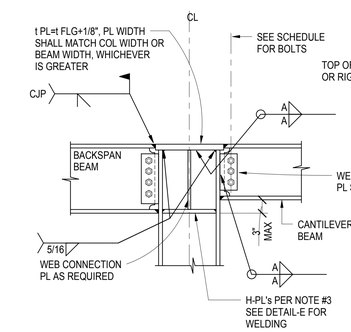

CANTILEVERED BEAM TO TOP OF COLUMN (F)

NON-SEISMIC DETAILS

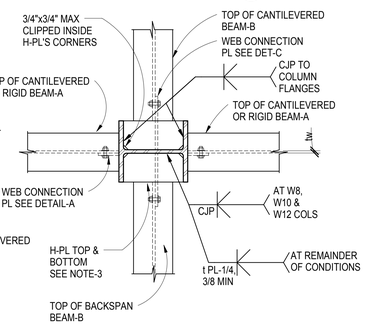

PLAN AT COLUMN CONNECTION (E)

CANTILEVERED BEAM TO COLUMN DETAILS (1)

3/4" = 1'-0"

CLIENT

CENTERCAL PROPERTIES, LLC

COPYRIGHT:

Any reproduction or distribution for any purpose other than authorized by IBI Group is forbidden. Written dimensions shall have precedence over scaled dimensions. Contractors shall verify and be responsible for all dimensions and conditions on the job, and report any errors or omissions to the architect then the dimensions and conditions shown on the drawing. Shop drawings shall be submitted to IBI Group for approval before proceeding with fabrication.

COPYRIGHT © 2016 IBI GROUP

ISSUES

NO.	ISSUANCE	STATUS	DATE
1	STRUCTURAL ADDENDUM 1		5/31/2016

SEAL

EXPIRES

SUB CONSULTANT

MARTIN & associates
JOHN A. MARTIN & ASSOCIATES
Structural Engineers
950 S. Grand Avenue
Los Angeles, Calif. 90015
Phone (213) 483-6490
Fax (213) 483-3084
J14261

PRIME CONSULTANT

IBI GROUP
18401 Von Karman Avenue, Suite 110
Irvine, CA 92612 United States
tel +1 949 833 5588 ext 146 fax +1 949 833 5511
ibigroup.com

PROJECT

The Village at Totem Lake - Building A
Kirkland, Washington

PROJECT NO:	J14261
DRAWN BY:	Author
CHKD BY:	Checker
SCALE:	AS SHOWN
DATE:	04/27/16

SHEET TITLE

TYPICAL DETAILS

BLDG: A

SHEET NUMBER: S1006

ISSUE: 1

5/31/2016 2:53:06 PM C:\Users\bkirton\Documents\ATW_Totem_Bldg_S_2016_bkirton.rvt

NOTES:

1. SEE PLANS AND SCHEDULE FOR BEAM & COLUMN SIZES AND COLUMN ORIENTATION. A TRIANGLE AT THE END OF SINGLE STEEL BEAMS & GIRDERS (►———) INDICATES RIGID CONNECTION CENTERED ON COLUMN CENTERLINE, UNO.
2. ABBREVATIONS: H-PL : HORIZONTAL COLUMN STIFFENER PLATES
   CP : COMPLETE PENETRATION BUTT WELD
   UNO: UNLESS OTHERWISE NOTED
   tw : BEAM WEB THICKNESS
3. H-PL: UNO, HORIZONTAL & WEB CONNECTION PLATES SHALL BE THE SAME GRADE MATERIALS AS THE CONNECTING BEAM. COLUMN HORIZONTAL STIFFENER PLATES (H-PL) TO BE AS THICK AS THE THICKEST BEAM FLANGE BEING RIGIDLY CONNECTED TO THE COLUMN FLANGE LESS 1/4" WHERE RIGIDLY CONNECTED BEAMS FRAME INTO THE COLUMN WEB, HORIZONTAL PLATE THICKNESS IS TO BE AT LEAST THE THICKNESS OF THE BEAM FLANGES. TAPER H-PL PER AWS WHERE THICKER PL IS USED. PLATES TO BE MINIMUM 1/2" FOR COLUMN DEPTH UP TO 16", 5/8" THICK FOR DEPTHS IN EXCESS OF 16". WHERE THE BEAM FLANGE THICKNESS EXCEEDS 1 3/4", SUBMIT SPECIAL WELDING PROCEDURES FOR FLANGE & WEB WELDINGS PRIOR TO PROCEEDING.
4. FILLET WELD SIZES SHALL BE AS SHOWN UNLESS A GREATER SIZE IS REQUIRED BY AISC TABLE 1.17. 2A.
5. WHERE DOUBLE ROW OF BOLTS ARE REQUIRED, USE MAXIMUM NUMBER POSSIBLE IN FIRST ROW AND BALANCE IN SECOND ROW.
6. a, FULL ULTRASONIC INSPECTION SHALL BE PROVIDED ON ALL COMPLETE PENETRATION GROOVE WELDS CONTAINED IN JOINTS AND SPLICES (TESTED 100 PERCENT).
   b, PARTIAL PENETRATION GROOVE WELDS, WHEN USED IN COLUMN SPLICES, SHALL BE TESTED EITHER BY ULTRASONIC TESTING OR RADIOGRAPHY.
   c, BASE METAL THICKER THAN 1 1/2 INCHES, WHEN SUBJECTED TO THROUGH THICKNESS WELD SHRINKAGE STRAINS, SHALL BE ULTRASONICALLY INSPECTED FOR DISCONTINUITIES, AND SHALL BE ACCEPTED OR REJECTED ON THE BASIS OF THE DEFECT RATING IN ACCORDANCE WITH THE (LARGER REFLECTOR) CRITERIA OF THE UNIFORM BUILDING CODE (UBC).
7. DOUBLER PLATES REQUIRED WHERE |1/2 IS SHOWN ON FRAME ELEVATIONS. NUMBER INSIDE BOX INDICATES PLATE THICKNESS IN INCHES, AND PLATES TO BE SAME GRADE AS THE COLUMNS.
8. WHERE DOUBLER PL THICKNESS EXCEEDS 7/8", USE ONE PL EACH SIDE OF WEB EQUAL TO HALF THE THICKNESS SCHEDULED.
9. WHERE BEAM FRAMES INTO COLUMN WEB ON ONE SIDE ONLY, PLACE DOUBLER PLATE ON OPPOSITE SIDE OF COLUMN.

RIGID BEAM CONNECTION SCHEDULE (H)

BEAM (DEPTH)	NO OF 1 1/8" BOLTS A325SC (ALT A490SC)	CONN PL t	WELD SIZE A	WELD SIZE B

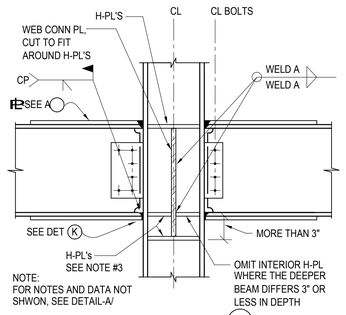

BEAM TO COLUMN FLANGE (B)

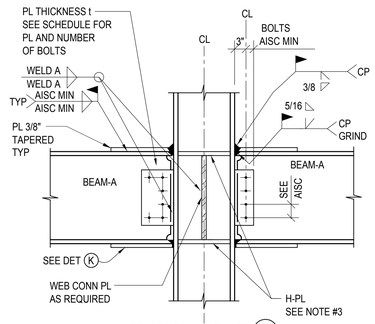

BEAM TO COLUMN FLANGE (A)

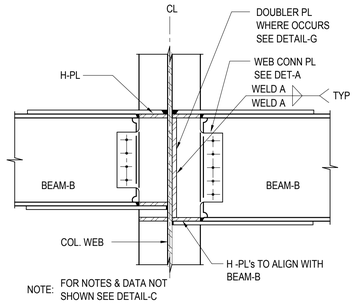

BEAM TO COLUMN WEB (D)

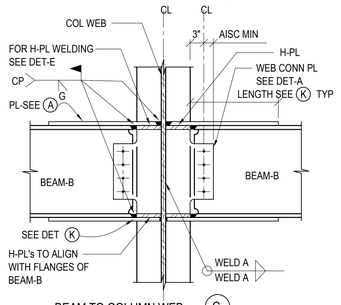

BEAM TO COLUMN WEB (C)

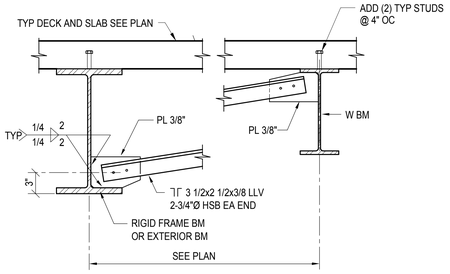

NOTE: BRACES SHOWN DASHED ON PLAN

RIGID FRAME LATERAL BRACING (J)

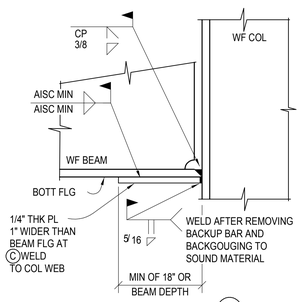

BOTTOM FLANGE WELD (K)

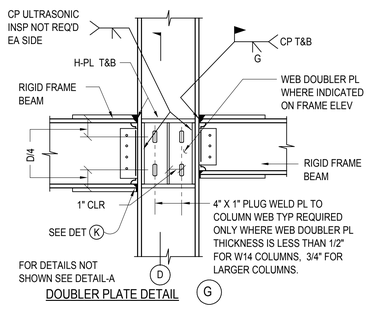

DOUBLER PLATE DETAIL (G)

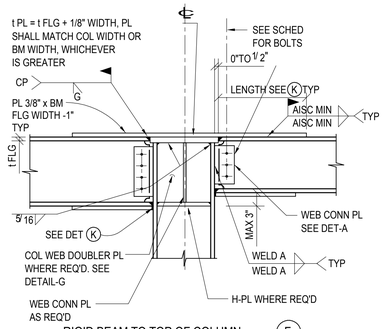

RIGID BEAM TO TOP OF COLUMN (F)

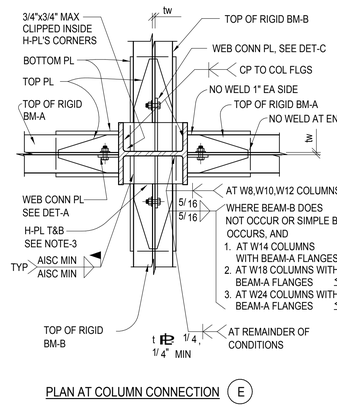

PLAN AT COLUMN CONNECTION (E)

TYPICAL RIGID FRAME DETAILS (11)
3/4" = 1'-0"

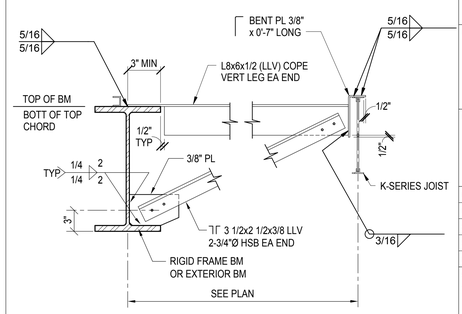

NOTE: BRACES SHOWN DASHED ON PLAN

BRACED FRAME LATERAL BRACING (16)
3/4" = 1'-0"

CLIENT
CENTERCAL PROPERTIES, LLC

COPYRIGHT:

Any reproduction or distribution for any purpose other than authorized by IBI Group is forbidden. Written dimensions shall have precedence over scaled dimensions. Contractors shall verify and be responsible for all dimensions and conditions on the job, and report any errors or omissions to the architect then the dimensions and conditions shown on the drawing. Shop drawings shall be submitted to IBI Group for approval before proceeding with fabrication.

COPYRIGHT © 2016 IBI GROUP

ISSUES

NO.	ISSUANCE	STATUS	DATE
1	STRUCTURAL ADDENDUM 1		5/31/2016

SEAL

EXPIRES

SUB CONSULTANT
MARTIN & associates
JOHN A. MARTIN & ASSOCIATES
Structural Engineers
950 S. Grand Avenue
Los Angeles, Calif. 90015
Phone (213) 483-6490
Fax (213) 483-3084
J14261

PRIME CONSULTANT
IBI
IBI GROUP
16401 Von Karman Avenue, Suite 110
Irvine, CA 92612 United States
tel +1 949 833 5588 ext 146 fax +1 949 833 5511
ibigroup.com

PROJECT
The Village at Totem Lake - Building A
Kirkland, Washington

PROJECT NO:	J14261
DRAWN BY:	Author
CHKD BY:	Checker
SCALE:	AS SHOWN
DATE:	04/27/16

SHEET TITLE
TYPICAL DETAILS

BLDG: A
SHEET NUMBER: S1007
ISSUE: 1

5/31/2016 2:23:07 PM C:\Users\jkelson\Documents\ATW_Totem_Bldg-A_S_2016_jkelson.rvt

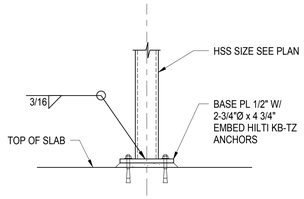

ELEVATOR GUIDE RAIL SUPPORT DETAIL 2
3/4" = 1'-0"

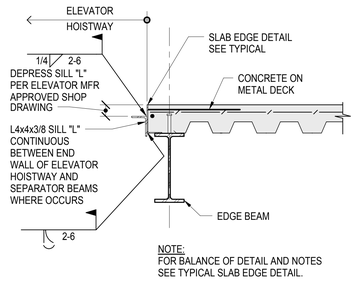

NOTE:
FOR BALANCE OF DETAIL AND NOTES
SEE TYPICAL SLAB EDGE DETAIL.

TYPICAL ELEVATOR SILL ANGLE 7
3/4" = 1'-0"

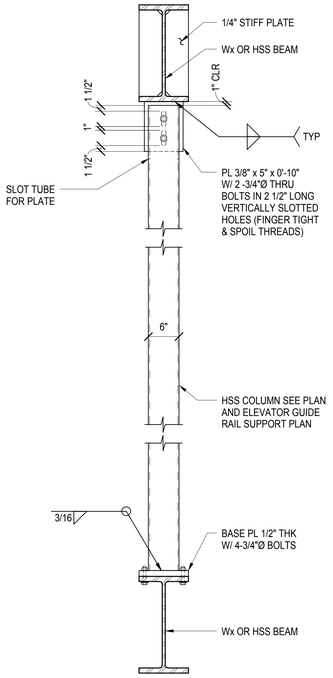

ELEVATOR GUIDE RAIL SUPPORT DETAIL 6
3/4" = 1'-0"

CLIENT

CENTERCAL PROPERTIES, LLC

COPYRIGHT:

Any reproduction or distribution for any purpose other than authorized by IBI Group is forbidden. Written dimensions shall have precedence over scaled dimensions. Contractors shall verify and be responsible for all dimensions and conditions on the job and IBI Group shall be informed of any variations from the dimensions and conditions shown on the drawing. Shop drawings shall be submitted to IBI Group for approval before proceeding with fabrication.

COPYRIGHT © 2016 IBI GROUP

ISSUES

NO.	ISSUANCE	STATUS	DATE
1	STRUCTURAL ADDENDUM 1		5/31/2016

SEAL

EXPIRES

SUB CONSULTANT

MARTIN & associates
JOHN A. MARTIN
& ASSOCIATES
Structural Engineers
950 S. Grand Avenue
Los Angeles, Calif. 90015
Phone (213) 483-6490
Fax (213) 483-3084
J14261

PRIME CONSULTANT

IBI
IBI GROUP
18401 Von Karman Avenue, Suite 110
Irvine, CA 92612 United States
tel +1 949 833 5588 ext 146 fax +1 949 833 5511
ibigroup.com

PROJECT

The Village at Totem Lake - Building A
Kirkland, Washington

PROJECT NO:	J14261
DRAWN BY:	Author
CHKD BY:	Checker
SCALE:	AS SHOWN
DATE:	04/27/16

SHEET TITLE

TYPICAL DETAILS

BLDG A | SHEET NUMBER S1008 | ISSUE 1

C:\Users\bkirton\Documents\ATW_Totem_Bldg_S_2016_bkirton.rvt
5/31/2016 2:53:08 PM

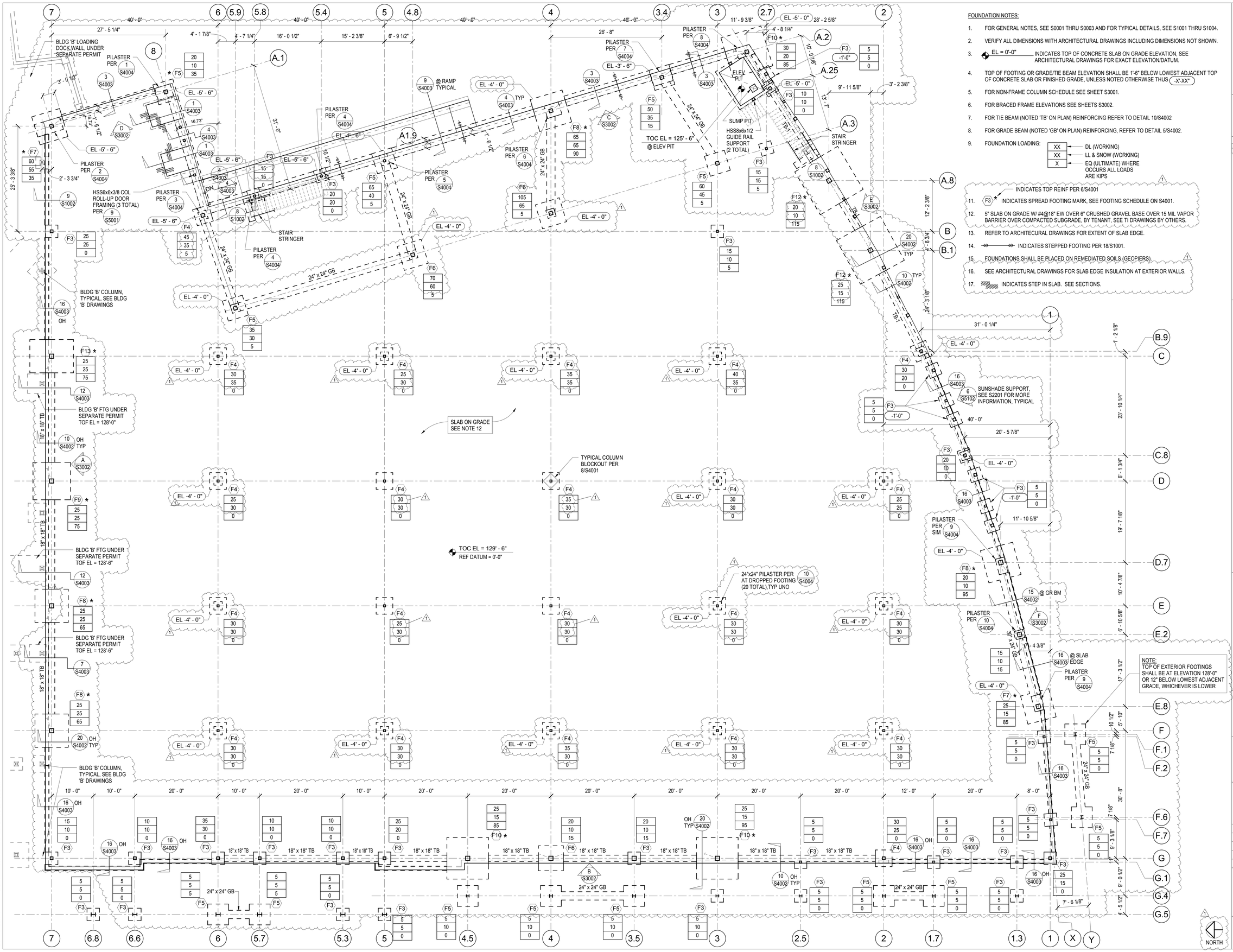

FOUNDATION NOTES:

1. FOR GENERAL NOTES, SEE S0001 THRU S0003 AND FOR TYPICAL DETAILS, SEE S1001 THRU S1004.
2. VERIFY ALL DIMENSIONS WITH ARCHITECTURAL DRAWINGS INCLUDING DIMENSIONS NOT SHOWN.
3. EL = 0'-0" INDICATES TOP OF CONCRETE SLAB ON GRADE ELEVATION, SEE ARCHITECTURAL DRAWINGS FOR EXACT ELEVATION/DATUM.
4. TOP OF FOOTING OR GRADE/TIE BEAM ELEVATION SHALL BE 1'-6" BELOW LOWEST ADJACENT TOP OF CONCRETE SLAB OR FINISHED GRADE, UNLESS NOTED OTHERWISE THUS -X'-XX"
5. FOR NON-FRAME COLUMN SCHEDULE SEE SHEET S3001.
6. FOR BRACED FRAME ELEVATIONS SEE SHEETS S3002.
7. FOR TIE BEAM (NOTED 'TB' ON PLAN) REINFORCING REFER TO DETAIL 10/S4002
8. FOR GRADE BEAM (NOTED 'GB' ON PLAN) REINFORCING, REFER TO DETAIL 5/S4002.
9. FOUNDATION LOADING:
   - XX — DL (WORKING)
   - XX — LL & SNOW (WORKING)
   - X — EQ (ULTIMATE) WHERE OCCURS ALL LOADS ARE KIPS
10. INDICATES TOP REINF PER 6/S4001
11. F3 * INDICATES SPREAD FOOTING MARK, SEE FOOTING SCHEDULE ON S4001.
12. 5" SLAB ON GRADE W/ #4@18" EW OVER 6" CRUSHED GRAVEL BASE OVER 15 MIL VAPOR BARRIER OVER COMPACTED SUBGRADE, BY TENANT, SEE TI DRAWINGS BY OTHERS.
13. REFER TO ARCHITECURAL DRAWINGS FOR EXTENT OF SLAB EDGE.
14. INDICATES STEPPED FOOTING PER 18/S1001.
15. FOUNDATIONS SHALL BE PLACED ON REMEDIATED SOILS (GEOPIERS).
16. SEE ARCHITECTURAL DRAWINGS FOR SLAB EDGE INSULATION AT EXTERIOR WALLS.
17. INDICATES STEP IN SLAB. SEE SECTIONS.

CLIENT

CENTERCAL PROPERTIES, LLC

COPYRIGHT:

Any reproduction or distribution for any purpose other than authorized by IBI Group is forbidden. Written dimensions shall have precedence over scaled dimensions. Contractors shall verify and be responsible for all dimensions and conditions on the job and IBI Group shall be informed of any variations from the dimensions and conditions shown on the drawing. Shop drawings shall be submitted to IBI Group for approval before proceeding with fabrication.

COPYRIGHT © 2016 IBI GROUP

ISSUES

NO.	ISSUANCE	STATUS	DATE
1	STRUCTURAL ADDENDUM 1		5/31/2016

SEAL

BARRY SCHINDLER STATE OF WASHINGTON 21669 REGISTERED PROFESSIONAL ENGINEER

EXPIRES

SUB CONSULTANT

MARTIN & associates

JOHN A. MARTIN & ASSOCIATES
Structural Engineers
950 S. Grand Avenue
Los Angeles, Calif. 90015
Phone (213) 483-6490
Fax (213) 483-3084
J14261

PRIME CONSULTANT

IBI GROUP
18401 Von Karman Avenue, Suite 110
Irvine, CA 92612 United States
tel +1 949 833 5588 ext 146 fax +1 949 833 5511
ibigroup.com

PROJECT

The Village at Totem Lake - Building A
Kirkland, Washington

PROJECT NO:	J14261
DRAWN BY:	BK
CHKD' BY:	JC
SCALE:	AS SHOWN
DATE:	04/27/16

SHEET TITLE

FOUNDATION PLAN

BLDG	SHEET NUMBER	ISSUE
A	S2101	

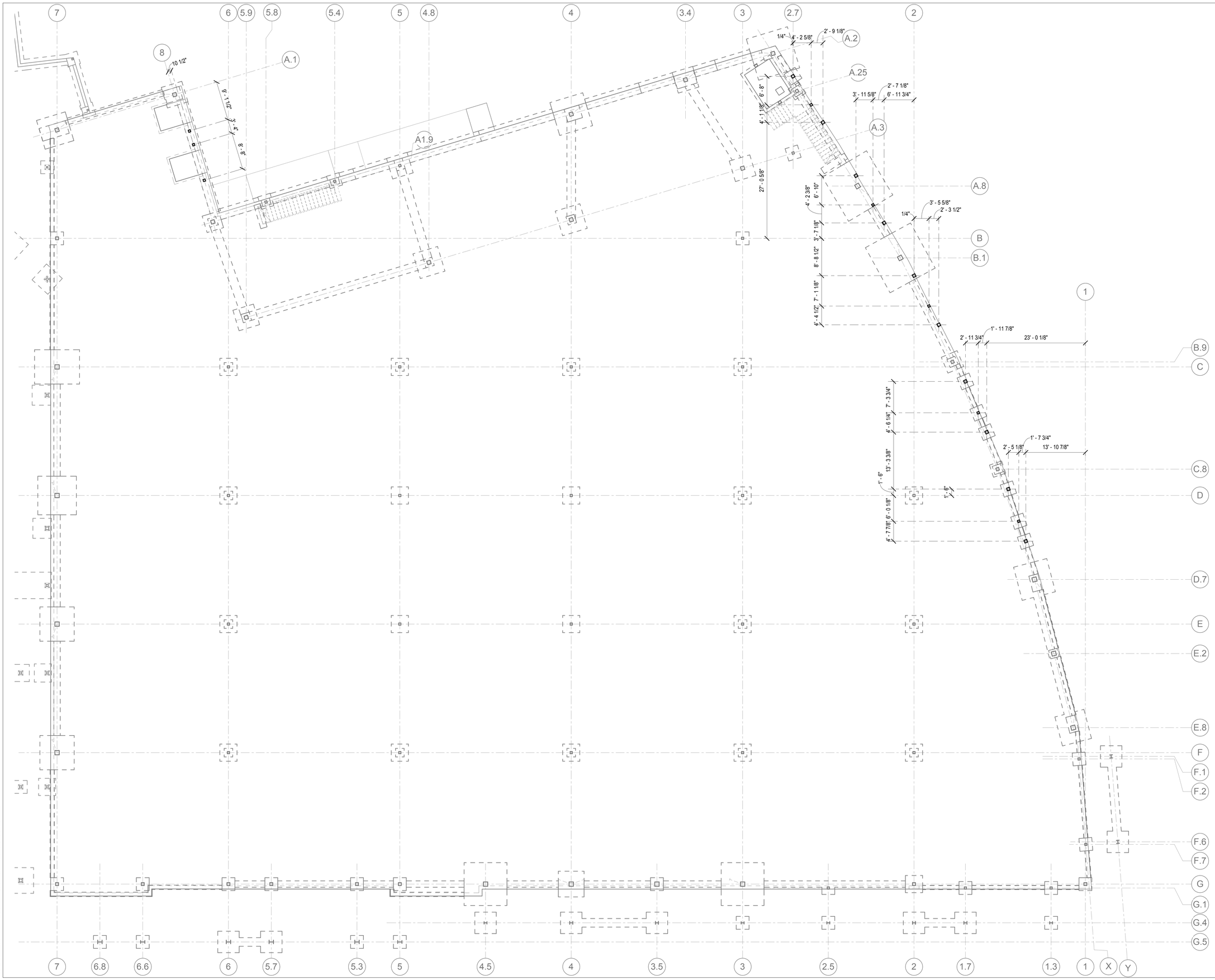

CLIENT

CENTERCAL PROPERTIES, LLC

COPYRIGHT:

Any reproduction or distribution for any purpose other than authorized by IBI Group is forbidden. Written dimensions shall have precedence over scaled dimensions. Contractors shall verify and be responsible for all dimensions and conditions on the job and IBI Group shall be informed of any variations from the dimensions and conditions shown on the drawing. Shop drawings shall be submitted to IBI Group for approval before proceeding with fabrication.

COPYRIGHT © 2016 IBI GROUP

ISSUES

NO.	ISSUANCE	STATUS	DATE
1	STRUCTURAL ADDENDUM 1		5/31/2016

SEAL

BARRY SCHINDLER
STATE OF WASHINGTON
21669
REGISTERED
PROFESSIONAL ENGINEER

EXPIRES

SUB CONSULTANT

MARTIN & associates
JOHN A. MARTIN & ASSOCIATES
Structural Engineers
950 S. Grand Avenue
Los Angeles, Calif. 90015
Phone (213) 483-6490
Fax (213) 483-3084
J14261

PRIME CONSULTANT

IBI
IBI GROUP
18401 Von Karman Avenue, Suite 110
Irvine, CA 92612 United States
tel +1 949 833 5588 ext 146 fax +1 949 833 5511
ibigroup.com

PROJECT

The Village at Totem Lake - Building A
Kirkland, Washington

PROJECT NO:	J14261
DRAWN BY:	Author
CHKD' BY:	Checker
SCALE:	AS SHOWN
DATE:	04/27/16

SHEET TITLE

SUPPLEMENTAL COLUMN PLAN

1

BLDG	SHEET NUMBER	ISSUE
A	S2101A	

C:\Users\bkirton\Documents\ATW_Totem_Bldg A_S_2016_bkirton.rvt

5/31/2016 2:53:09 PM

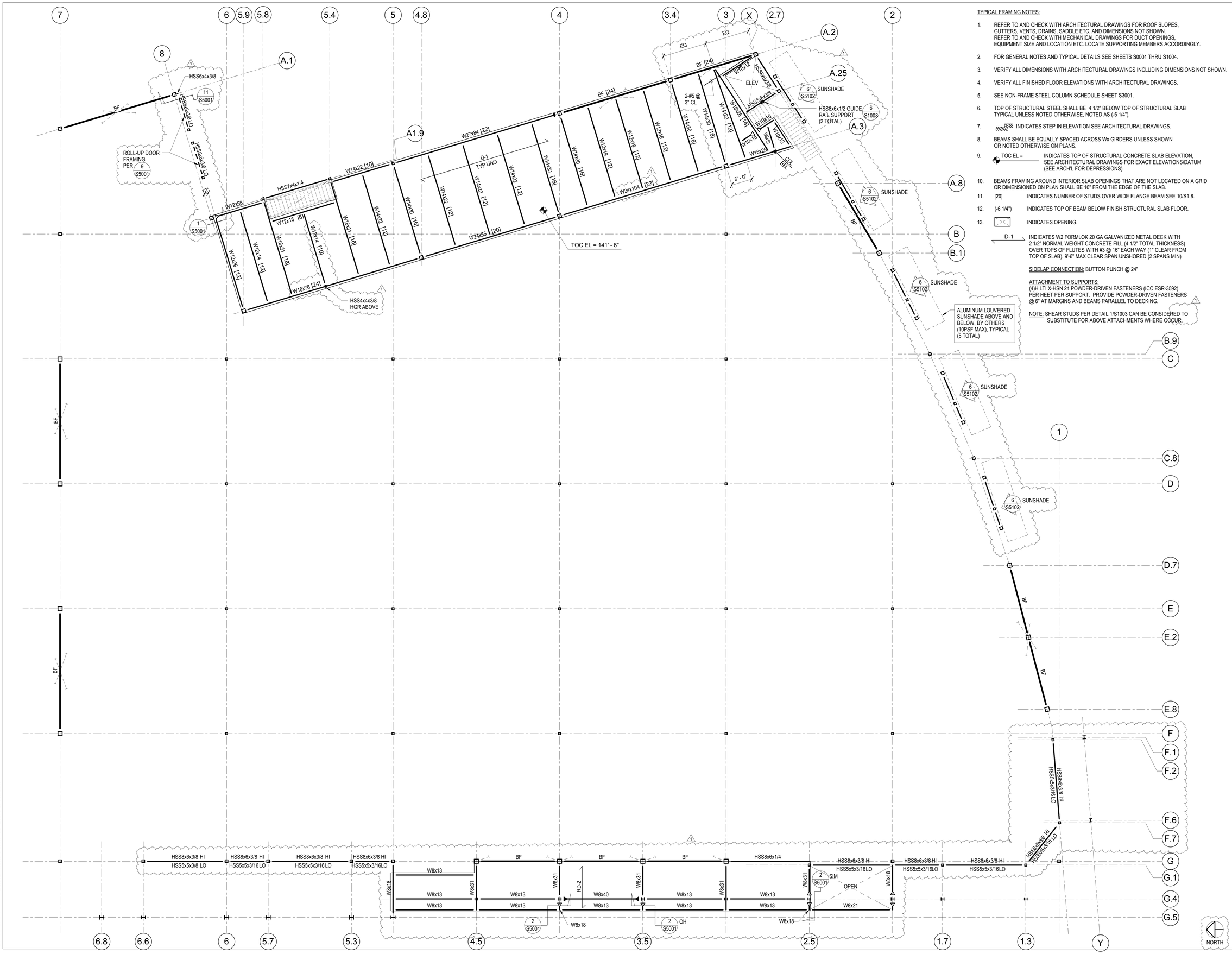

TYPICAL FRAMING NOTES:

1. REFER TO AND CHECK WITH ARCHITECTURAL DRAWINGS FOR ROOF SLOPES, GUTTERS, VENTS, DRAINS, SADDLE ETC. AND DIMENSIONS NOT SHOWN. REFER TO AND CHECK WITH MECHANICAL DRAWINGS FOR DUCT OPENINGS, EQUIPMENT SIZE AND LOCATION ETC. LOCATE SUPPORTING MEMBERS ACCORDINGLY.
2. FOR GENERAL NOTES AND TYPICAL DETAILS SEE SHEETS S0001 THRU S1004.
3. VERIFY ALL DIMENSIONS WITH ARCHITECTURAL DRAWINGS INCLUDING DIMENSIONS NOT SHOWN.
4. VERIFY ALL FINISHED FLOOR ELEVATIONS WITH ARCHITECTURAL DRAWINGS.
5. SEE NON-FRAME STEEL COLUMN SCHEDULE SHEET S3001.
6. TOP OF STRUCTURAL STEEL SHALL BE 4 1/2" BELOW TOP OF STRUCTURAL SLAB TYPICAL UNLESS NOTED OTHERWISE, NOTED AS (-6 1/4").
7. INDICATES STEP IN ELEVATION SEE ARCHITECTURAL DRAWINGS.
8. BEAMS SHALL BE EQUALLY SPACED ACROSS Wx GIRDERS UNLESS SHOWN OR NOTED OTHERWISE ON PLANS.
9. TOC EL = INDICATES TOP OF STRUCTURAL CONCRETE SLAB ELEVATION, SEE ARCHITECTURAL DRAWINGS FOR EXACT ELEVATIONS/DATUM (SEE ARCH'L FOR DEPRESSIONS).
10. BEAMS FRAMING AROUND INTERIOR SLAB OPENINGS THAT ARE NOT LOCATED ON A GRID OR DIMENSIONED ON PLAN SHALL BE 10" FROM THE EDGE OF THE SLAB.
11. [20] INDICATES NUMBER OF STUDS OVER WIDE FLANGE BEAM SEE 10/S1.8.
12. (-6 1/4") INDICATES TOP OF BEAM BELOW FINISH STRUCTURAL SLAB FLOOR.
13. INDICATES OPENING.

D-1 INDICATES W2 FORMLOK 20 GA GALVANIZED METAL DECK WITH 2 1/2" NORMAL WEIGHT CONCRETE FILL (4 1/2" TOTAL THICKNESS) OVER TOPS OF FLUTES WITH #3 @ 16" EACH WAY (1" CLEAR FROM TOP OF SLAB). 9'-6" MAX CLEAR SPAN UNSHORED (2 SPANS MIN)

SIDELAP CONNECTION: BUTTON PUNCH @ 24"

ATTACHMENT TO SUPPORTS:
(4)HILTI X-HSN 24 POWDER-DRIVEN FASTENERS (ICC ESR-3592) PER HEET PER SUPPORT. PROVIDE POWDER-DRIVEN FASTENERS @ 6" AT MARGINS AND BEAMS PARALLEL TO DECKING.

NOTE: SHEAR STUDS PER DETAIL 1/S1003 CAN BE CONSIDERED TO SUBSTITUTE FOR ABOVE ATTACHMENTS WHERE OCCUR.

CLIENT

CENTERCAL PROPERTIES, LLC

COPYRIGHT:

Any reproduction or distribution for any purpose other than authorized by IBI Group is forbidden. Written dimensions shall have precedence over scaled dimensions. Contractors shall verify and be responsible for all dimensions and conditions on the job, and report any errors or omissions to the architect then the dimensions and conditions shown on the drawing. Shop drawings shall be submitted to IBI Group for approval before proceeding with fabrication.

COPYRIGHT © 2016 IBI GROUP

ISSUES

NO.	ISSUANCE	STATUS	DATE
1	STRUCTURAL ADDENDUM 1		5/31/2016

SEAL

BRADY S. SHINN, STATE OF WASHINGTON, 21669, REGISTERED PROFESSIONAL ENGINEER

EXPIRES

SUB CONSULTANT

JOHN A. MARTIN & ASSOCIATES
Structural Engineers
950 S. Grand Avenue
Los Angeles, Calif. 90015
Phone (213) 483-6490
Fax (213) 483-3084
J14261

PRIME CONSULTANT

IBI GROUP
18401 Von Karman Avenue, Suite 110
Irvine, CA 92612 United States
tel +1 949 833 5588 ext 146 fax +1 949 833 5511
ibigroup.com

PROJECT

The Village at Totem Lake - Building A
Kirkland, Washington

PROJECT NO:	J14261
DRAWN BY:	BK
CHKD BY:	JC
SCALE:	AS SHOWN
DATE:	04/27/16

SHEET TITLE

MEZZANINE FRAMING PLAN

BLDG	SHEET NUMBER	ISSUE
A	S2201	

NORTH

C:\Users\bkinn\Documents\ATW_Totem_Bldg_S_2016_bkinn.rvt

5/31/2016 2:03:10 PM

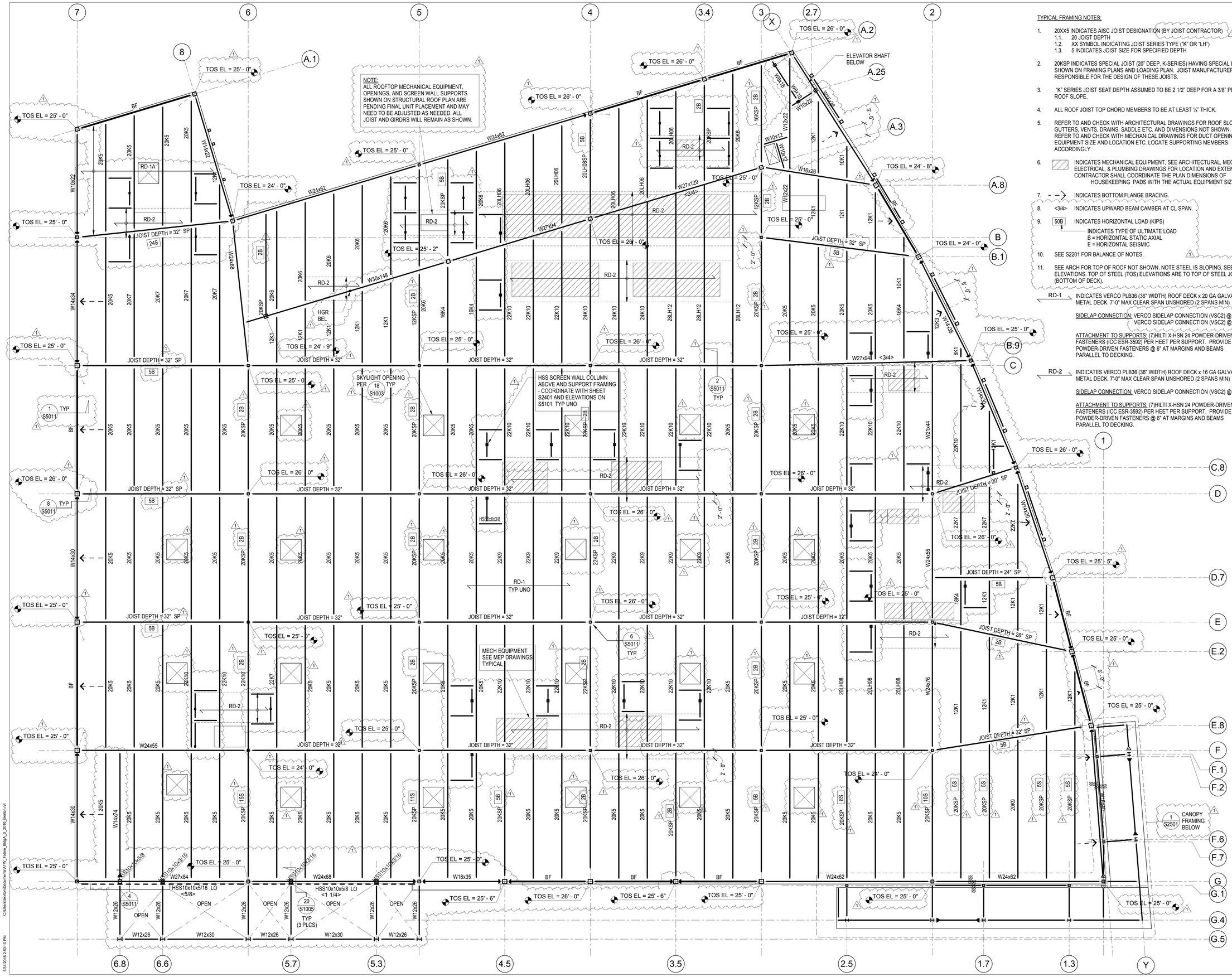

TYPICAL FRAMING NOTES:

1. 20XX5 INDICATES AISC JOIST DESIGNATION (BY JOIST CONTRACTOR)
   1.1. 20 JOIST DEPTH
   1.2. XX SYMBOL INDICATING JOIST SERIES TYPE ("K" OR "LH")
   1.3. 5 INDICATES JOIST SIZE FOR SPECIFIED DEPTH
2. 20KSP INDICATES SPECIAL JOIST (20" DEEP, K-SERIES) HAVING SPECIAL LOADING SHOWN ON FRAMING PLANS AND LOADING PLAN. JOIST MANUFACTURER IS RESPONSIBLE FOR THE DESIGN OF THESE JOISTS.
3. "K" SERIES JOIST SEAT DEPTH ASSUMED TO BE 2 1/2" DEEP FOR A 3/8" PER FOOT ROOF SLOPE.
4. ALL ROOF JOIST TOP CHORD MEMBERS TO BE AT LEAST ¼" THICK.
5. REFER TO AND CHECK WITH ARCHITECTURAL DRAWINGS FOR ROOF SLOPES, GUTTERS, VENTS, DRAINS, SADDLE ETC. AND DIMENSIONS NOT SHOWN. REFER TO AND CHECK WITH MECHANICAL DRAWINGS FOR DUCT OPENINGS, EQUIPMENT SIZE AND LOCATION ETC. LOCATE SUPPORTING MEMBERS ACCORDINGLY.
6. INDICATES MECHANICAL EQUIPMENT, SEE ARCHITECTURAL, MECHANICAL, ELECTRICAL, & PLUMBING DRAWINGS FOR LOCATION AND EXTENT. CONTRACTOR SHALL COORDINATE THE PLAN DIMENSIONS OF HOUSEKEEPING PADS WITH THE ACTUAL EQUIPMENT SIZE.
7. INDICATES BOTTOM FLANGE BRACING.
8. <3/4> INDICATES UPWARD BEAM CAMBER AT CL SPAN.
9. 50B INDICATES HORIZONTAL LOAD (KIPS)
   INDICATES TYPE OF ULTIMATE LOAD
   B = HORIZONTAL STATIC AXIAL
   E = HORIZONTAL SEISMIC
10. SEE S2201 FOR BALANCE OF NOTES.
11. SEE ARCH FOR TOP OF ROOF NOT SHOWN. NOTE STEEL IS SLOPING, SEE PLAN ELEVATIONS. TOP OF STEEL (TOS) ELEVATIONS ARE TO TOP OF STEEL JOISTS (BOTTOM OF DECK).

RD-1 INDICATES VERCO PLB36 (36" WIDTH) ROOF DECK x 20 GA GALVANIZED METAL DECK. 7'-0" MAX CLEAR SPAN UNSHORED (2 SPANS MIN)

SIDELAP CONNECTION: VERCO SIDELAP CONNECTION (VSC2) @ 12" @ RD-1
VERCO SIDELAP CONNECTION (VSC2) @ 8" @ RD-1A.

ATTACHMENT TO SUPPORTS: (7)HILTI X-HSN 24 POWDER-DRIVEN FASTENERS (ICC ESR-3592) PER HEET PER SUPPORT. PROVIDE POWDER-DRIVEN FASTENERS @ 6" AT MARGINS AND BEAMS PARALLEL TO DECKING.

RD-2 INDICATES VERCO PLB36 (36" WIDTH) ROOF DECK x 16 GA GALVANIZED METAL DECK. 7'-0" MAX CLEAR SPAN UNSHORED (2 SPANS MIN)

SIDELAP CONNECTION: VERCO SIDELAP CONNECTION (VSC2) @ 12"

ATTACHMENT TO SUPPORTS: (7)HILTI X-HSN 24 POWDER-DRIVEN FASTENERS (ICC ESR-3592) PER HEET PER SUPPORT. PROVIDE POWDER-DRIVEN FASTENERS @ 6" AT MARGINS AND BEAMS PARALLEL TO DECKING.

CLIENT
CENTERCAL PROPERTIES, LLC

COPYRIGHT:
Any reproduction or distribution for any purpose other than authorized by IBI Group is forbidden. Written dimensions shall have precedence over scaled dimensions. Contractors shall verify and be responsible for all dimensions and conditions on the job, and report any errors or omissions to the consultant then the dimensions and conditions shown on the drawing. Shop drawings shall be submitted to IBI Group for approval before proceeding with fabrication.
COPYRIGHT © 2016 IBI GROUP

ISSUES

NO.	ISSUANCE	STATUS	DATE
1	STRUCTURAL ADDENDUM 1		5/31/2016

SEAL
BARRY SCHNITZER STATE OF WASHINGTON 21669 PROFESSIONAL ENGINEER
EXPIRES

SUB CONSULTANT
MARTIN & associates
JOHN A. MARTIN & ASSOCIATES
Structural Engineers
950 S. Grand Avenue
Los Angeles, Calif. 90015
Phone (213) 483-6490
Fax (213) 483-3084
J14261

PRIME CONSULTANT
IBI GROUP
18401 Von Karman Avenue, Suite 110
Irvine, CA 92612 United States
tel +1 949 833 5588 ext 146 fax +1 949 833 5511
ibigroup.com

PROJECT
The Village at Totem Lake - Building A
Kirkland, Washington

PROJECT NO:	J14261
DRAWN BY:	BK
CHKD BY:	JC
SCALE:	AS SHOWN
DATE:	04/27/16

SHEET TITLE
MAIN ROOF FRAMING PLAN

BLDG	SHEET NUMBER	ISSUE
A	S2301	

5/31/2016 2:53:10 PM
C:\Users\bkrisor\Documents\ATW_Totem_Bldg A_S_2016_bkrisor.rvt

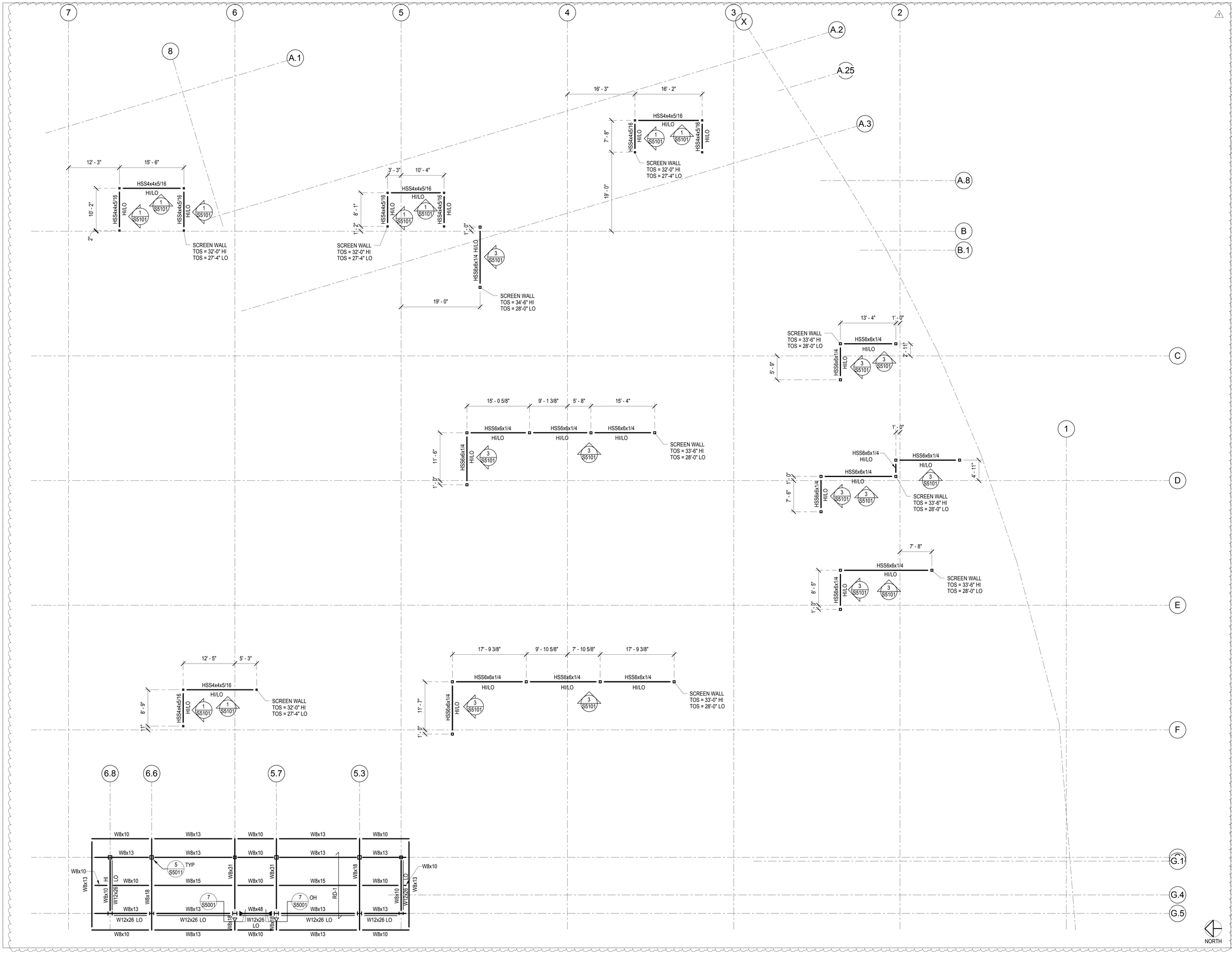

CLIENT

CENTERCAL PROPERTIES, LLC

COPYRIGHT:

Any reproduction or distribution for any purpose other than authorized by IBI Group is forbidden. Written dimensions shall have precedence over scaled dimensions. Contractors shall verify and be responsible for all dimensions and conditions on the job and IBI Group shall be informed of any variations from the dimensions and conditions shown on the drawing. Shop drawings shall be submitted to IBI Group for approval before proceeding with fabrication.

COPYRIGHT © 2016 IBI GROUP

ISSUES

NO.	ISSUANCE	STATUS	DATE
1	STRUCTURAL ADDENDUM 1		5/31/2016

SEAL

BARRY SCHINDLER
STATE OF WASHINGTON
21669
REGISTERED PROFESSIONAL ENGINEER

EXPIRES

SUB CONSULTANT

MARTIN & associates

JOHN A. MARTIN & ASSOCIATES
Structural Engineers
950 S. Grand Avenue
Los Angeles, Calif. 90015
Phone (213) 483-6490
Fax (213) 483-3084
J14261

PRIME CONSULTANT

IBI

IBI GROUP
18401 Von Karman Avenue, Suite 110
Irvine, CA 92612 United States
tel +1 949 833 5588 ext 146 fax +1 949 833 5511
ibigroup.com

PROJECT

The Village at Totem Lake - Building A
Kirkland, Washington

PROJECT NO:	J14261
DRAWN BY:	Author
CHKD BY:	Checker
SCALE:	AS SHOWN
DATE:	04/27/16

SHEET TITLE

UPPER ROOF / SCREEN WALL FRAMING PLAN

BLDG	SHEET NUMBER	ISSUE
A	S2401	

C:\Users\bkirton\Documents\ATW_Totem_Bldg_S_2016_bkirton.rvt

5/31/2016 2:53:10 PM

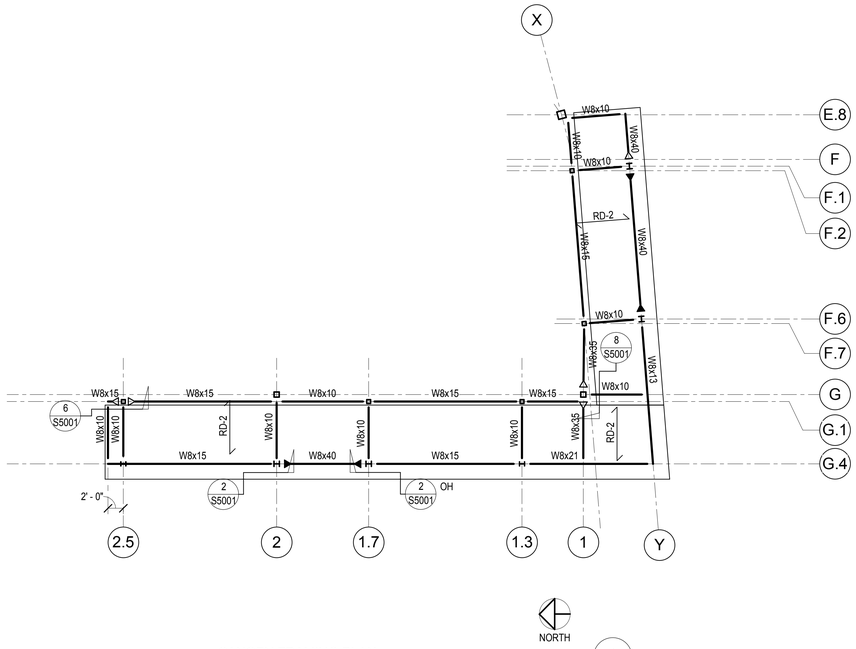

CANOPY FRAMING PLAN 1

1/8" = 1'-0"

CLIENT

CENTERCAL PROPERTIES, LLC

COPYRIGHT:

Any reproduction or distribution for any purpose other than authorized by IBI Group is forbidden. Written dimensions shall have precedence over scaled dimensions. Contractors shall verify and be responsible for all dimensions and conditions on the job and IBI Group shall be informed of any variations from the dimensions and conditions shown on the drawing. Shop drawings shall be submitted to IBI Group for approval before proceeding with fabrication.

COPYRIGHT © 2016 IBI GROUP

ISSUES

NO.	ISSUANCE	STATUS	DATE
1	STRUCTURAL ADDENDUM 1		5/31/2016

SEAL

BARRY SCHINDLER
STATE OF WASHINGTON
21669
REGISTERED
PROFESSIONAL ENGINEER

EXPIRES

SUB CONSULTANT

MARTIN & associates
JOHN A. MARTIN & ASSOCIATES
Structural Engineers
950 S. Grand Avenue
Los Angeles, Calif. 90015
Phone (213) 483-6490
Fax (213) 483-3084
J14261

PRIME CONSULTANT

IBI
IBI GROUP
18401 Von Karman Avenue, Suite 110
Irvine, CA 92612 United States
tel +1 949 833 5588 ext 146 fax +1 949 833 5511
ibigroup.com

PROJECT

The Village at Totem Lake - Building A

Kirkland, Washington

PROJECT NO:	J14261
DRAWN BY:	Author
CHKD BY:	Checker
SCALE:	AS SHOWN
DATE:	04/27/16

SHEET TITLE

CANOPY FRAMING PLANS

1

BLDG A | SHEET NUMBER S2501 | ISSUE

C:\Users\bkirton\Documents\ATW_Totem_Bldg_S_2016_bkirton.rvt

5/31/2016 2:53:10 PM

BLDG A - UPPER ROOF																					BLDG A - UPPER ROOF
164' - 0" BLDG A - MAIN ROOF																			1		164' - 0" BLDG A - MAIN ROOF
155' - 6" BLDG A - MEZZANINE																					155' - 6" BLDG A - MEZZANINE
141' - 6" BLDG A - LEVEL 1	HSS6x6x3/8	HSS10x10x5/8	HSS6x6x1/4	HSS10x10x5/8	HSS10x10x5/8	HSS10x10x5/8	HSS10x10x5/8	HSS6x6x1/4	HSS6x6x1/4	HSS6x6x3/8	HSS8x8x3/8	HSS6x6x5/8	HSS6x6x1/2	HSS6x6x3/8	HSS6x6x5/8	HSS6x6x1/2	HSS6x6x1/2	HSS6x6x1/2	HSS6x6x3/8	HSS8x8x1/2	141' - 6" BLDG A - LEVEL 1
129' - 6"																					129' - 6"
Column Locations	**A.2-5**	**A.2-8**	**A.3-2.7**	**A.3-3**	**A.3-4**	**A.3-4.8**	**A.3-5.9**	**A1.9-5.4**	**A1.9-5.8**	**B-3**	**B-7**	**C-3**	**C-4**	**C-5**	**C-6**	**D-2**	**D-3**	**D-4**	**D-5**	**A.25-X**	**Column Locations**
	3/4"x 14"x 1' - 2"	3/4"x 14"x 1' - 2"	3/4"x 14"x 1' - 2"	1"x 18"x 1' - 6"	1"x 18"x 1' - 6"	1 1/2"x 20"x 1' - 8"	1 1/2"x 20"x 1' - 8"	3/4"x 7"x 1' - 2"	3/4"x 7"x 1' - 2"	3/4"x 14"x 1' - 2"	3/4"x 16"x 1' - 4"	3/4"x 14"x 1' - 2"	3/4"x 14"x 1' - 2"	3/4"x 14"x 1' - 2"	3/4"x 14"x 1' - 2"	3/4"x 14"x 1' - 2"	3/4"x 14"x 1' - 2"	3/4"x 14"x 1' - 2"	3/4"x 14"x 1' - 2"	3/4"x 14"x 1' - 2"	BASE PLATE SIZE (t x B x N) GR 50
	4 - 3/4"Ø	4 - 3/4"Ø	4 - 3/4Ø	8 - 1"Ø (F1554 GR 105)	8 - 1"Ø (F1554 GR 105)	12 - 1 1/8"Ø (F1554 GR 105)	12 - 1"Ø (F1554 GR 105)	2 - 1"Ø	2 - 1"Ø	4 - 3/4"Ø	4 - 3/4"Ø	4 - 3/4"Ø	4 - 3/4"Ø	4 - 3/4"Ø	4 - 3/4"Ø	4 - 3/4"Ø	4 - 3/4"Ø	4 - 3/4"Ø	4 - 3/4"Ø	4 - 3/4"Ø	ANCHOR BOLTS NUMBER & SIZE (F1554-36 TYP UNO)
	11 S4001	11 S4001	11 S4001 1	11 S4001	11 S4001	17 S4001	17 S4001	11 S4001	11 S4001	11 S4001	11 S4001	11 S4001	11 S4001	11 S4001	11 S4001	11 S4001	11 S4001	11 S4001	11 S4001	11 S4001	COLUMN BASE CONN DETAIL

BLDG A - UPPER ROOF														1			1				BLDG A - UPPER ROOF
164' - 0" BLDG A - MAIN ROOF																					164' - 0" BLDG A - MAIN ROOF
155' - 6" BLDG A - MEZZANINE																					155' - 6" BLDG A - MEZZANINE
141' - 6" BLDG A - LEVEL 1	HSS6x6x3/8	HSS6x6x1/2	HSS6x6x3/8	HSS6x6x3/8	HSS6x6x3/8	HSS6x6x3/8	HSS6x6x5/8	HSS6x6x1/2	HSS6x6x1/2	HSS6x6x3/8	HSS6x6x3/8	HSS8x8x3/8	HSS8x8x3/8	HSS8x8x3/8	HSS8x8x3/8	HSS8x8x3/8	HSS8x8x3/8	HSS8x8x3/8	HSS8x8x3/8	HSS8x8x3/8	141' - 6" BLDG A - LEVEL 1
129' - 6"																					129' - 6"
Column Locations	**D-6**	**E-2**	**E-3**	**E-4**	**E-5**	**E-6**	**F-2**	**F-3**	**F-4**	**F-5**	**F-6**	**G-1**	**G-2**	**G-5**	**G-5.3**	**G-5.7**	**G-6**	**G-6.6**	**G-7**	**B.9-X**	**C.8-X**	**Column Locations**
	3/4"x 14"x 1' - 2"	3/4"x 14"x 1' - 2"	3/4"x 14"x 1' - 2"	3/4"x 14"x 1' - 2"	3/4"x 14"x 1' - 2"	3/4"x 14"x 1' - 2"	3/4"x 14"x 1' - 2"	3/4"x 14"x 1' - 2"	3/4"x 14"x 1' - 2"	3/4"x 14"x 1' - 2"	3/4"x 14"x 1' - 2"	3/4"x 16"x 1' - 4"	3/4"x 16"x 1' - 4"	3/4"x 16"x 1' - 4"	3/4"x 16"x 1' - 4"	3/4"x 16"x 1' - 4"	3/4"x 16"x 1' - 4"	3/4"x 16"x 1' - 4"	3/4"x 16"x 1' - 4"	3/4"x 16"x 1' - 4"	3/4"x 16"x 1' - 4"	BASE PLATE SIZE (t x B x N) GR 50
	4 - 3/4"Ø	4 - 3/4"Ø	4 - 3/4"Ø	4 - 3/4"Ø	4 - 3/4"Ø	4 - 3/4"Ø	4 - 3/4"Ø	4 - 3/4"Ø	4 - 3/4"Ø	4 - 3/4"Ø	4 - 3/4"Ø	4 - 3/4"Ø	4 - 3/4"Ø	4 - 3/4"Ø	4 - 3/4"Ø	4 - 3/4"Ø	4 - 3/4"Ø	4 - 3/4"Ø	4 - 3/4"Ø	4 - 3/4"Ø	4 - 3/4"Ø	ANCHOR BOLTS NUMBER & SIZE (F1554-36 TYP UNO)
	11 S4001	11 S4001	11 S4001	11 S4001	11 S4001	11 S4001	11 S4001	11 S4001	11 S4001	11 S4001	11 S4001	11 S4001	11 S4001	11 S4001	11 S4001	11 S4001	11 S4001	11 S4001	11 S4001	11 S4001	11 S4001	COLUMN BASE CONN DETAIL

BLDG A - UPPER ROOF																					BLDG A - UPPER ROOF
164' - 0" BLDG A - MAIN ROOF																					164' - 0" BLDG A - MAIN ROOF
155' - 6" BLDG A - MEZZANINE	HSS6x6x5/8	HSS6x6x5/8	HSS6x6x5/8	HSS6x6x5/8	W8x24	W8x48	W8x48	W8x24					W12x40	W12x53	W12x53	W12x53	W12x40	W12x53	W8x48	W8x48	155' - 6" BLDG A - MEZZANINE
141' - 6" BLDG A - LEVEL 1									W8x24	W8x48	W8x48	W8x24									141' - 6" BLDG A - LEVEL 1
129' - 6"																					129' - 6"
Column Locations	**F.6-1**	**G.1-1.3**	**G.1-1.7**	**G.1-2.5**	**G.4-1.3**	**G.4-1.7**	**G.4-2**	**G.4-2.5**	**G.4-3**	**G.4-3.5**	**G.4-4**	**G.4-4.5**	**G.5-5**	**G.5-5.3**	**G.5-5.7**	**G.5-6**	**G.5-6.6**	**G.5-6.8**	**F.1-Y**	**F.6-Y**	**Column Locations**
	3/4"x 16"x 1' - 4"	3/4"x 16"x 1' - 4"	3/4"x 16"x 1' - 4"	3/4"x 16"x 1' - 4"	1/2"x 12"x 1' - 2"	1/2"x 14"x 1' - 6"	1/2"x 14"x 1' - 6"	1/2"x 12"x 1' - 2"	1/2"x 12"x 1' - 2"	1/2"x 14"x 1' - 6"	1/2"x 14"x 1' - 6"	1/2"x 12"x 1' - 2"	1/2"x 10"x 1' - 2"	1/2"x 10"x 1' - 2"	1/2"x 10"x 1' - 2"	1/2"x 10"x 1' - 2"	1/2"x 10"x 1' - 2"	1/2"x 10"x 1' - 2"	1/2"x 14"x 1' - 6"	1/2"x 14"x 1' - 6"	BASE PLATE SIZE (t x B x N) GR 50
	4 - 3/4"Ø	4 - 3/4"Ø	4 - 3/4"Ø	4 - 3/4"Ø	4 - 3/4"Ø (F1554 GR105)	4 - 3/4"Ø (F1554 GR105)	4 - 3/4"Ø (F1554 GR105)	4 - 3/4"Ø (F1554 GR105)	4 - 3/4"Ø (F1554 GR105)	4 - 3/4"Ø (F1554 GR105)	4 - 3/4"Ø (F1554 GR105)	4 - 3/4"Ø (F1554 GR105)	4 - 3/4"Ø	4 - 3/4"Ø	4 - 3/4"Ø	4 - 3/4"Ø	4 - 3/4"Ø	4 - 3/4"Ø	4 - 3/4"Ø (F1554 GR105)	4 - 3/4"Ø (F1554 GR105)	ANCHOR BOLTS NUMBER & SIZE (F1554-36 TYP UNO)
	11 S4001	11 S4001	11 S4001	11 S4001	20 S4001	20 S4001	20 S4001	20 S4001	20 S4001	20 S4001	20 S4001	20 S4001	20 S4001	20 S4001	20 S4001	20 S4001	20 S4001	20 S4001	20 S4001	20 S4001	COLUMN BASE CONN DETAIL

1

CLIENT

CENTERCAL PROPERTIES, LLC

COPYRIGHT:

Any reproduction or distribution for any purpose other than authorized by IBI Group is forbidden. Written dimensions shall have precedence over scaled dimensions. Contractors shall verify and be responsible for all dimensions and conditions on the job, and report any errors or omissions to the architect then the dimensions and conditions shown on the drawing. Shop drawings shall be submitted to IBI Group for approval before proceeding with fabrication.

COPYRIGHT © 2016 IBI GROUP

ISSUES

NO.	ISSUANCE	STATUS	DATE
1	STRUCTURAL ADDENDUM 1		5/31/2016

SEAL

BARRY SCHNITZER STATE OF WASHINGTON 21669 REGISTERED PROFESSIONAL ENGINEER

EXPIRES

SUB CONSULTANT

MARTIN & associates

JOHN A. MARTIN & ASSOCIATES
Structural Engineers
950 S. Grand Avenue
Los Angeles, Calif. 90015
Phone (213) 483-6490
Fax (213) 483-3084
J14261

PRIME CONSULTANT

IBI

IBI GROUP
18401 Von Karman Avenue, Suite 110
Irvine, CA 92612 United States
tel +1 949 833 5588 ext 146 fax +1 949 833 5511
ibigroup.com

PROJECT

The Village at Totem Lake - Building A
Kirkland, Washington

PROJECT NO:	J14261
DRAWN BY:	BK
CHKD' BY:	JC
SCALE:	AS SHOWN
DATE:	04/27/16

SHEET TITLE

STEEL COLUMN SCHEDULE

BLDG	SHEET NUMBER	ISSUE
A	S3001	

C:\Users\bkirton\Documents\ATW_Totem_Bldg A_S_2016_bkirton.rvt

5/31/2016 2:55:11 PM

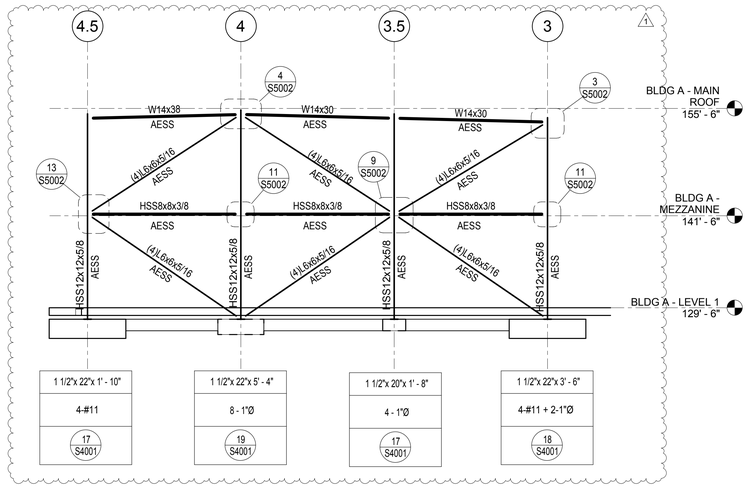

BRACED FRAME ELEVATION - LINE G (B)
1/8" = 1'-0"

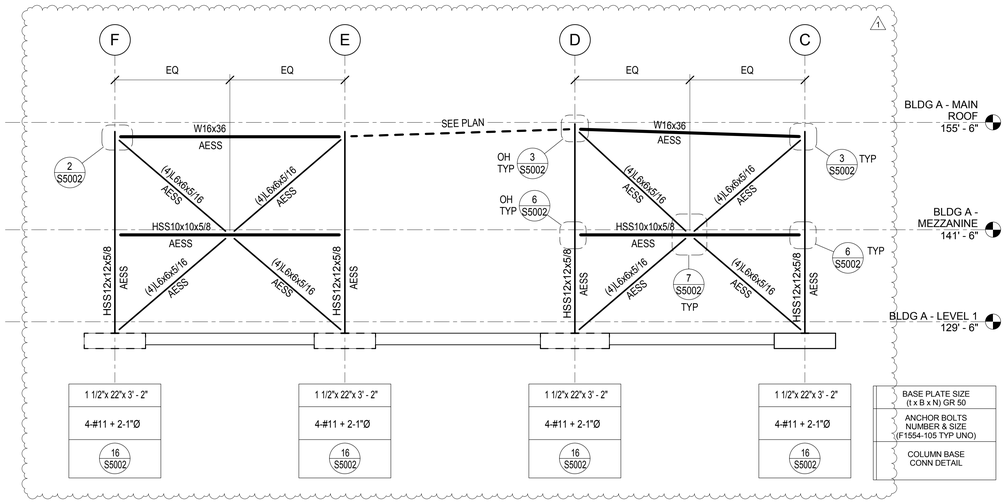

BRACED FRAME ELEVATION - LINE 7 (A)
1/8" = 1'-0"

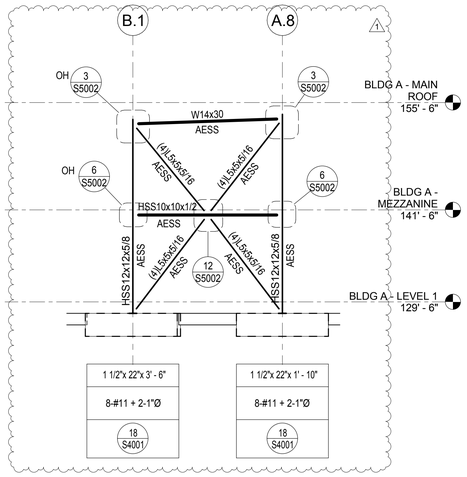

BRACED FRAME ELEVATION - LINE X (BETWEEN A.8-B.1) (E)
1/8" = 1'-0"

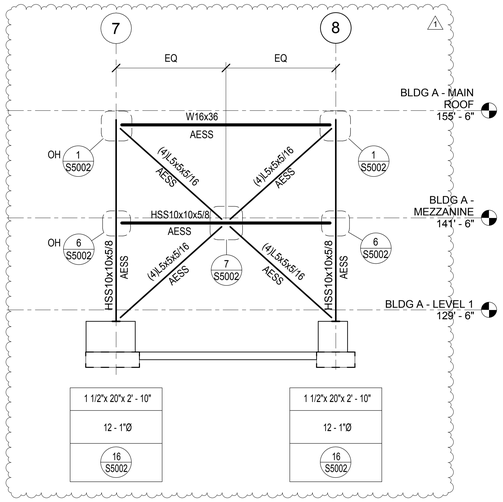

BRACED FRAME ELEVATION - LINE A.1 (D)
1/8" = 1'-0"

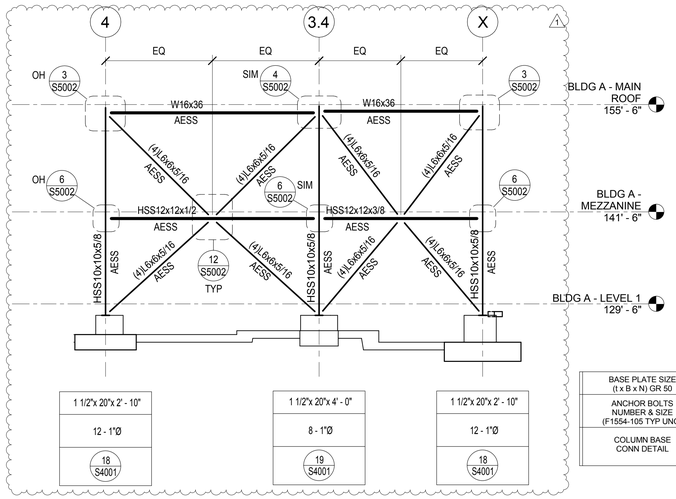

BRACED FRAME ELEVATION - LINE A.2 (C)
1/8" = 1'-0"

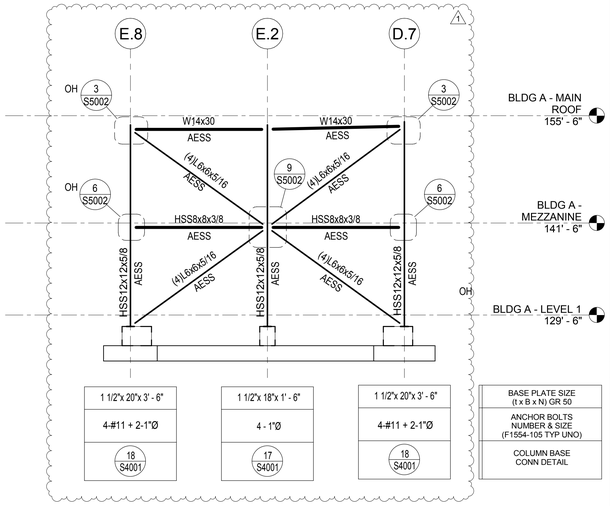

BRACED FRAME ELEVATION - LINE X (F)
1/8" = 1'-0"

CLIENT

CENTERCAL PROPERTIES, LLC

COPYRIGHT:

Any reproduction or distribution for any purpose other than authorized by IBI Group is forbidden. Written dimensions shall have precedence over scaled dimensions. Contractors shall verify and be responsible for all dimensions and conditions on the job, and report any errors or omissions to the architect then the dimensions and conditions shown on the drawing. Shop drawings shall be submitted to IBI Group for approval before proceeding with fabrication.

COPYRIGHT © 2016 IBI GROUP

ISSUES

NO.	ISSUANCE	STATUS	DATE
1	STRUCTURAL ADDENDUM 1		5/31/2016

SEAL

EXPIRES

SUB CONSULTANT

MARTIN & associates
JOHN A. MARTIN & ASSOCIATES
Structural Engineers
950 S. Grand Avenue
Los Angeles, Calif. 90015
Phone (213) 483-6490
Fax (213) 483-3084
J14261

PRIME CONSULTANT

IBI GROUP
18401 Von Karman Avenue, Suite 110
Irvine, CA 92612 United States
tel +1 949 833 5588 ext 146 fax +1 949 833 5511
ibigroup.com

PROJECT

The Village at Totem Lake - Building A
Kirkland, Washington

PROJECT NO:	J14261
DRAWN BY:	BK
CHKD BY:	JC
SCALE:	AS SHOWN
DATE:	04/27/16

SHEET TITLE

BRACED FRAME ELEVATIONS

BLDG	SHEET NUMBER	ISSUE
A	S3002	

5/31/2016 2:53:13 PM C:\Users\bkelson\Documents\ATW_Totem_Bldg A_S_2016_jkelson.rvt

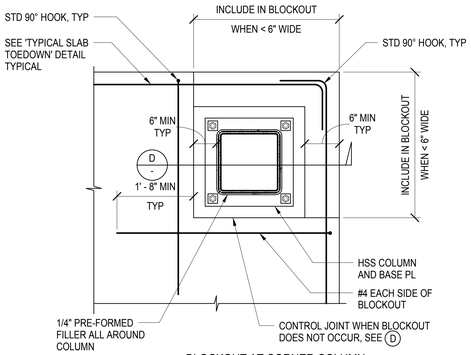

A BLOCKOUT AT CORNER COLUMN

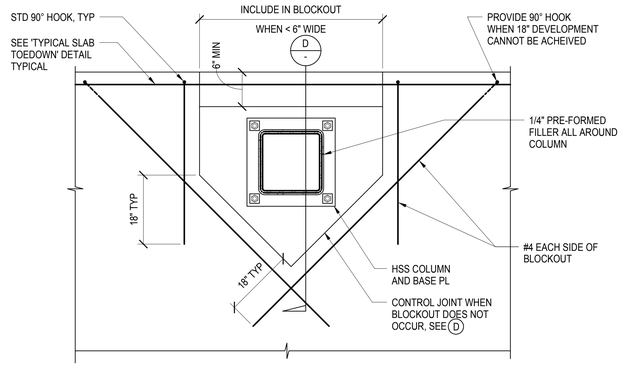

B BLOCKOUT AT EDGE COLUMN

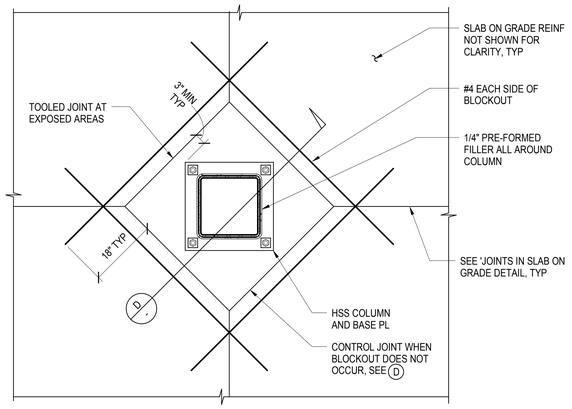

C BLOCKOUT AT INTERIOR COLUMN

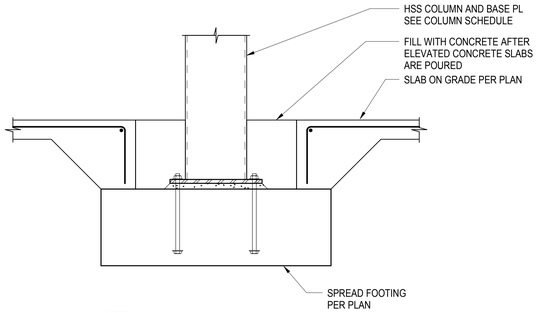

NOTE:
COLUMN BLOCKOUT IS NOT REQUIRED IF SLAB ON GRADE IS POURED AFTER ELEVATED CONCRETE SLABS ARE POURED.

D TYPICAL SECTION

TYPICAL COLUMN BLOCKOUT AT SLAB ON GRADE

8

TYPE	FOOTING SIZE W x L	FOOTING SIZE "T"	REINFORCING EA WAY BOT UNO	REINFORCING * EA WAY TOP (WHERE NOTED ON PLAN)	REMARKS
F3	3'-0" SQ.	18"	4-#5	-	
F4	4'-0" SQ.	18"	4-#5	-	
F5	5'-0" SQ.	24"	5-#6	5-#4	
F6	6'-0" SQ.	24"	6-#6	6-#4	
F7	7'-0" SQ.	24"	7-#6	7-#4	
F8	8'-0" SQ.	24"	8-#6	8-#4	
F9	9'-0" SQ.	24"	9-#6	9-#4	
F10	10'-0" SQ.	30"	10-#7	10-#4	
F11	11'-0" SQ.	30"	11-#7	11-#4	
F12	12'-0" SQ.	36"	11-#8	12-#4	
F13	8'-0"x10'-6"	24"	8-#6 LONG 10-#6 TRANS	8-#4 LONG 10-#4 TRANS	

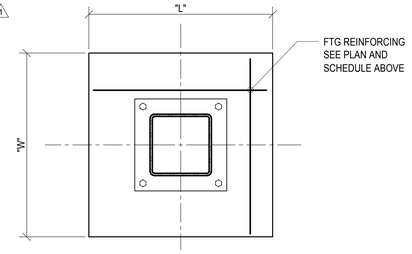

PLAN

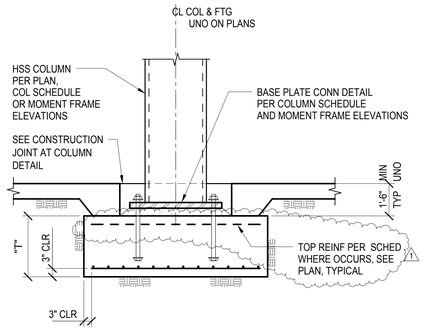

ELEVATION AT STEEL COLUMN A

NOTES:

1. SEE FOUNDATION PLANS AND SCHEDULE THIS SHEET FOR SPREAD FOOTING TYPES AND LOCATIONS
2. SEE COLUMN SCHEDULE FOR BASE PLATE AND ANCHOR BOLT SIZES
3. * SEE DET 8 & 12 ON S4002 FOR ADDITIONAL REINFORCING AT BRACED FRAME AND MOMENT FRAME FOOTINGS

COLUMN FOOTING DETAIL

6

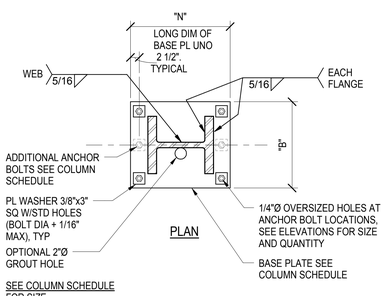

PLAN

SEE COLUMN SCHEDULE FOR SIZE

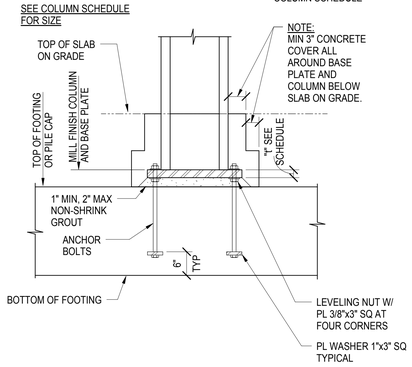

NOTE:
MIN 3" CONCRETE COVER ALL AROUND BASE PLATE AND COLUMN BELOW SLAB ON GRADE.

ELEVATION

COLUMN BASEPLATE DETAIL

3/4" = 1'-0"

20

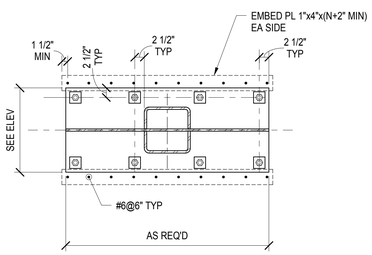

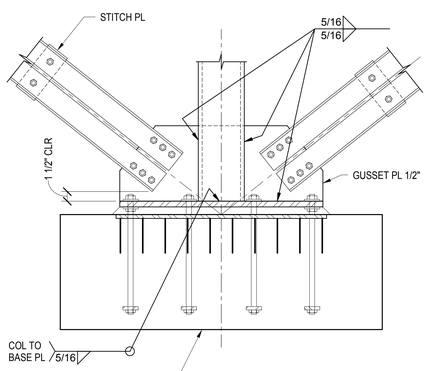

NOTE:
SEE 18/- FOR INFO NOT SHOWN.

BASE PL DETAIL FOR BRACED FRAME COLUMN

3/4" = 1'-0"

19

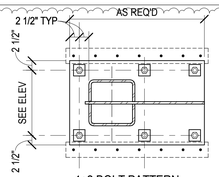

4+2 BOLT PATTERN

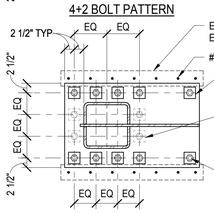

8+2 OR 12+2 BOLT PATTERN

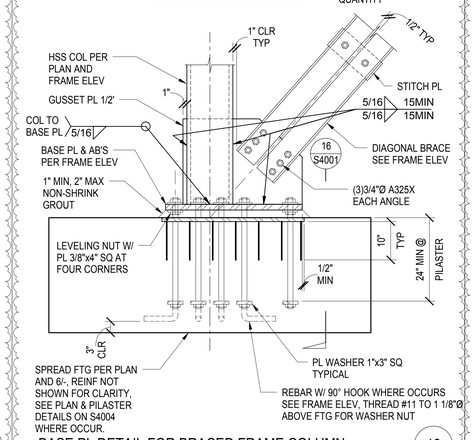

BASE PL DETAIL FOR BRACED FRAME COLUMN

3/4" = 1'-0"

18

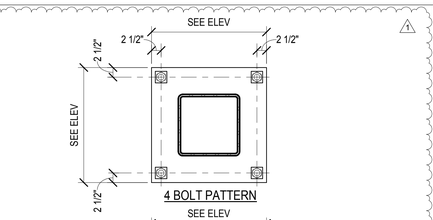

4 BOLT PATTERN

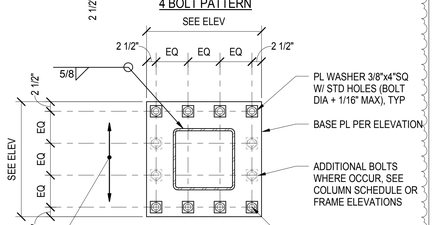

8 OR 12 BOLT PATTERN

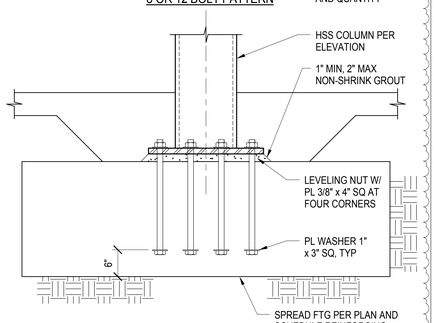

BASE PL DETAIL FOR FRAME COLUMN

3/4" = 1'-0"

17

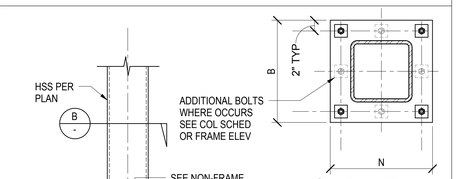

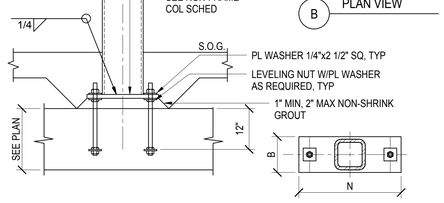

HSS COLUMN BASE CONNECTION

11

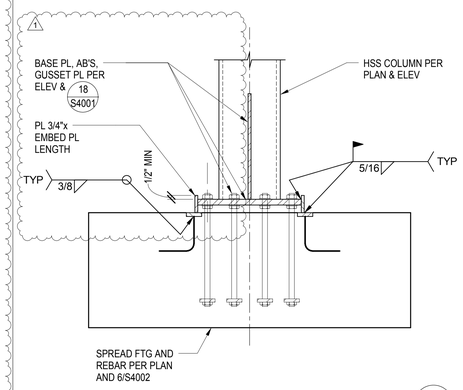

BASE PL DETAIL FOR BRACED FRAME COLUMN

3/4" = 1'-0"

16

CLIENT

CENTERCAL PROPERTIES, LLC

COPYRIGHT:

Any reproduction or distribution for any purpose other than authorized by IBI Group is forbidden. Written dimensions shall have precedence over scaled dimensions. Contractors shall verify and be responsible for all dimensions and conditions on site. IBI Group shall be notified of any variations from the dimensions and conditions shown on the drawing. Shop drawings shall be submitted to IBI Group for approval before proceeding with fabrication.

COPYRIGHT © 2016 IBI GROUP

ISSUES

NO.	ISSUANCE	STATUS	DATE
1	STRUCTURAL ADDENDUM 1		5/31/2016

SEAL

EXPIRES

SUB CONSULTANT

MARTIN & associates
JOHN A. MARTIN & ASSOCIATES
Structural Engineers
950 S. Grand Avenue
Los Angeles, Calif. 90015
Phone (213) 483-6490
Fax (213) 483-3084
J14261

PRIME CONSULTANT

IBI
IBI GROUP
18401 Von Karman Avenue, Suite 110
Irvine, CA 92612 United States
tel +1 949 833 5588 ext 146 fax +1 949 833 5511
ibigroup.com

PROJECT

The Village at Totem Lake - Building A
Kirkland, Washington

PROJECT NO:	J14261
DRAWN BY:	BK
CHKD BY:	JC
SCALE:	AS SHOWN
DATE:	04/27/16

SHEET TITLE

FOUNDATION SECTIONS AND DETAILS

BLDG	SHEET NUMBER	ISSUE
A	S4001	

5/31/2016 2:53:14 PM C:\Users\bkirton\Documents\KATW_Totem_Bldg A_S_2016_jkirton.rvt

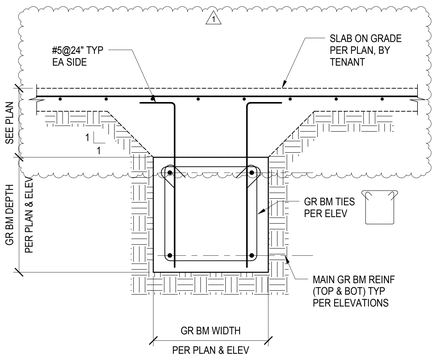

GRADE BEAM SECTION 5

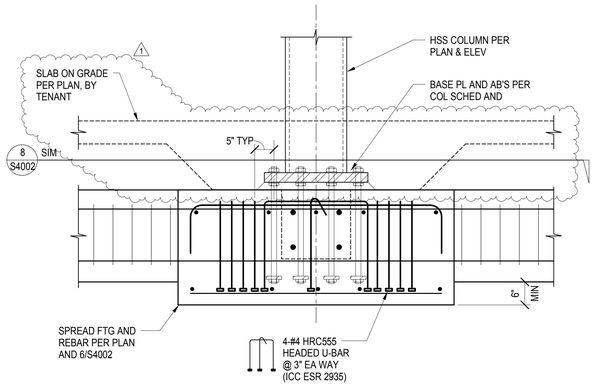

REINFORCING AT MOMENT FRAME BASE PLATE 3

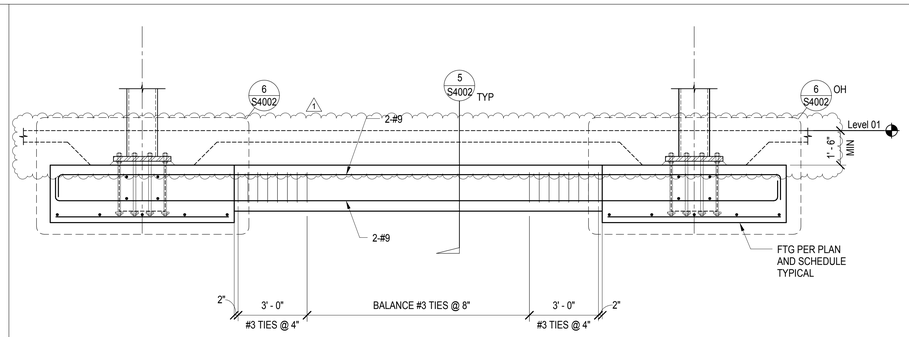

GRADE BEAM SIZE 24"x24"

GRADE BEAM ELEVATION 1

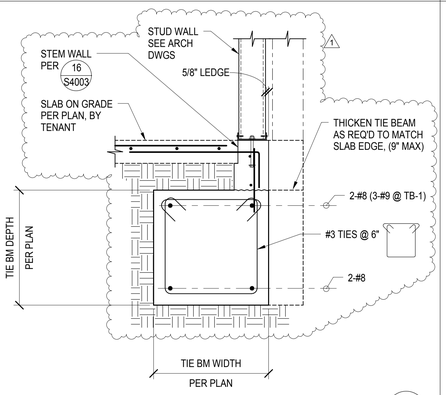

TIE BEAM SECTION 10
3/4" = 1'-0"

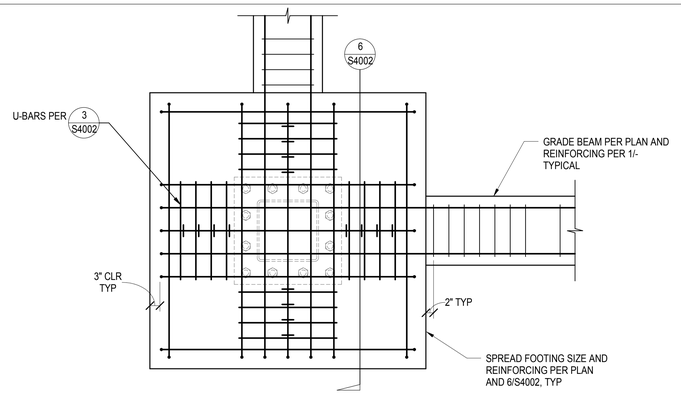

PLAN-DETAIL @ MOMENT FRAME BASE 8

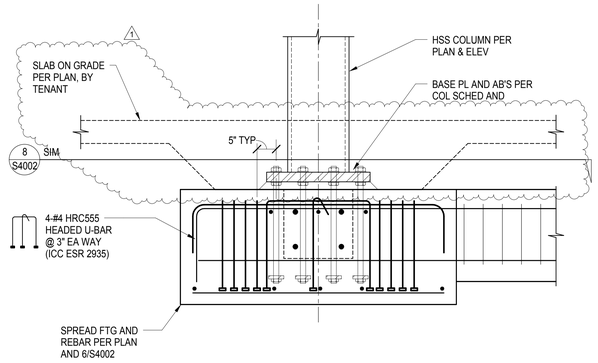

REINFORCING AT MOMENT FRAME BASE PLATE 6

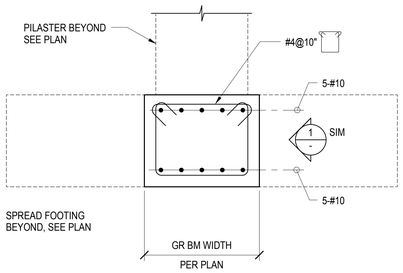

30"x24" GB SECTION 15
3/4" = 1'-0"

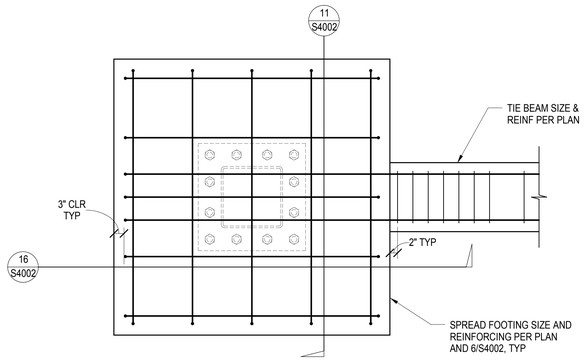

PLAN-DETAIL @ BRACED FRAME BASE 13
3/4" = 1'-0"

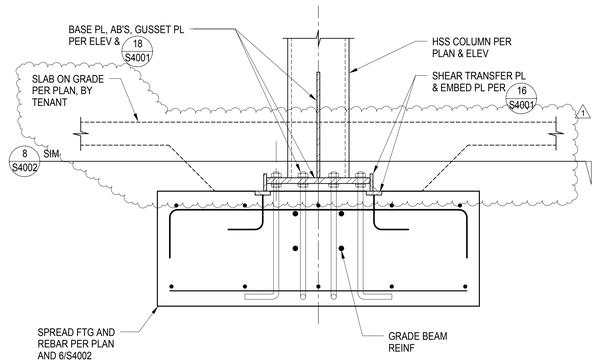

REINFORCING AT BRACED FRAME BASE PLATE 11
3/4" = 1'-0"

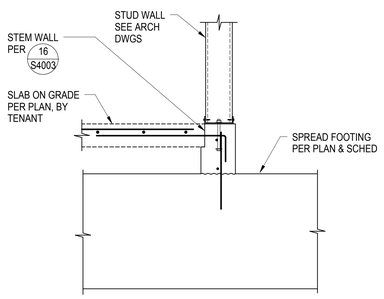

SLAB EDGE @ SPREAD FOOTING 20
3/4" = 1'-0"

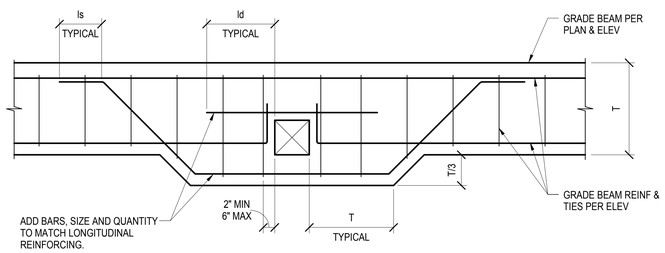

PIPE PENETRATIONS THROUGH GRADE BEAM 18
3/4" = 1'-0"

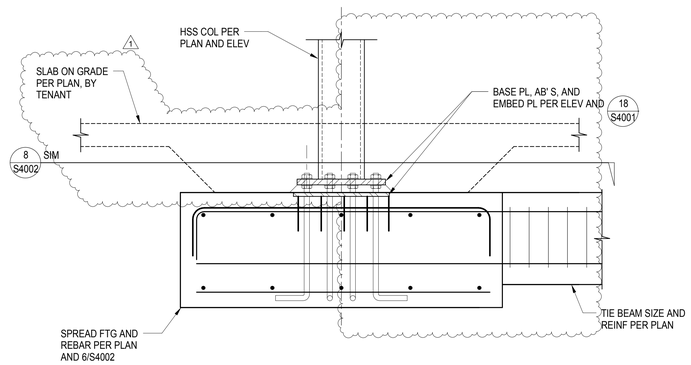

REINFORCING AT MOMENT FRAME BASE PLATE 16
3/4" = 1'-0"

CLIENT

CENTERCAL PROPERTIES, LLC

COPYRIGHT:

Any reproduction or distribution for any purpose other than authorized by IBI Group is forbidden. Written dimensions shall have precedence over scaled dimensions. Contractors shall verify and be responsible for all dimensions and conditions on site. IBI Group shall be notified of any variation from the dimensions and conditions shown on the drawing. Shop drawings shall be submitted to IBI Group for approval before proceeding with fabrication.

COPYRIGHT © 2016 IBI GROUP

ISSUES

NO.	ISSUANCE	STATUS	DATE
1	STRUCTURAL ADDENDUM 1		5/31/2016

SEAL

EXPIRES

SUB CONSULTANT

MARTIN & associates
JOHN A. MARTIN & ASSOCIATES
Structural Engineers
950 S. Grand Avenue
Los Angeles, Calif. 90015
Phone (213) 483-6490
Fax (213) 483-3084
J14261

PRIME CONSULTANT

IBI
IBI GROUP
18401 Von Karman Avenue, Suite 110
Irvine, CA 92612 United States
tel +1 949 833 5588 ext 146 fax +1 949 833 5511
ibigroup.com

PROJECT

The Village at Totem Lake - Building A
Kirkland, Washington

PROJECT NO:	J14261
DRAWN BY:	BK
CHKD BY:	JC
SCALE:	AS SHOWN
DATE:	04/27/16

SHEET TITLE

GRADE BEAM SECTIONS AND ELEVATIONS

BLDG	SHEET NUMBER	ISSUE
A	S4002	

C:\Users\bkirker\Documents\ATW_Totem_Bldg A_S_2016_bkirker.rvt

5/31/2016 2:53:16 PM

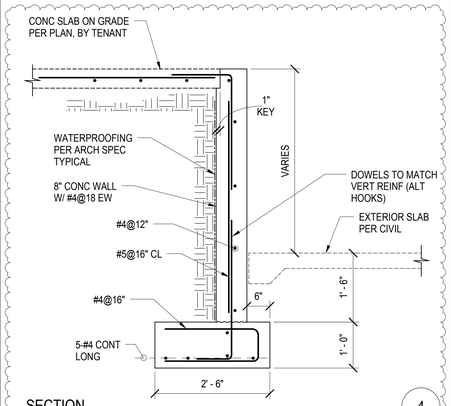

SECTION
3/4" = 1'-0"
4

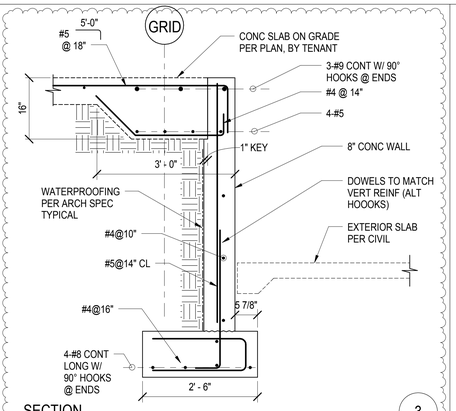

SECTION
3/4" = 1'-0"
3

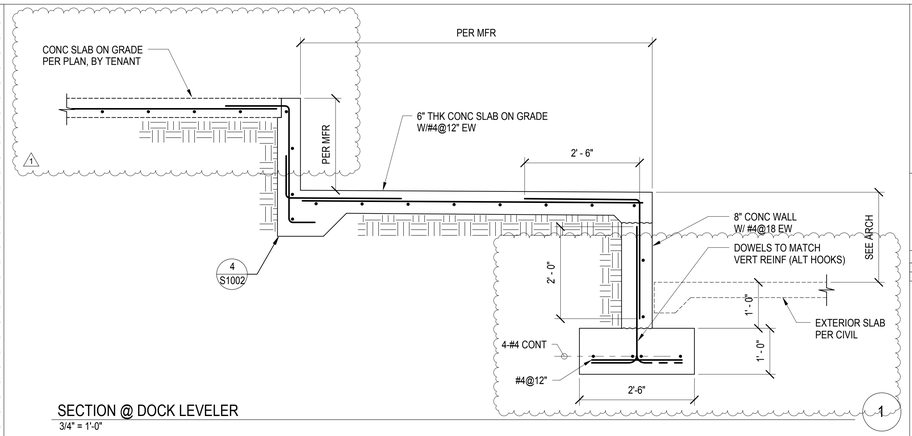

SECTION @ DOCK LEVELER
3/4" = 1'-0"
1

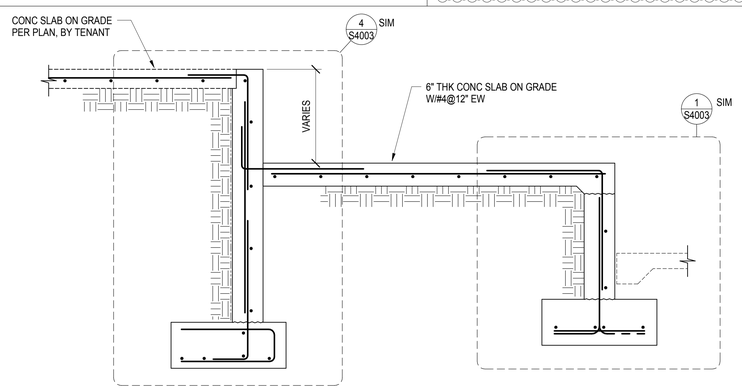

SECTION @ LOADING DOCK RAMP
3/4" = 1'-0"
9

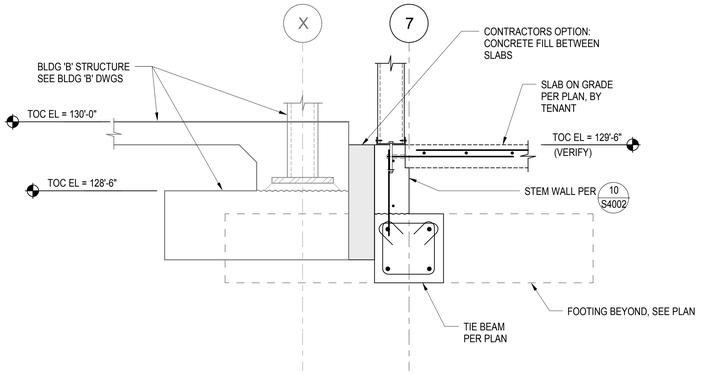

SECTION
3/4" = 1'-0"
7

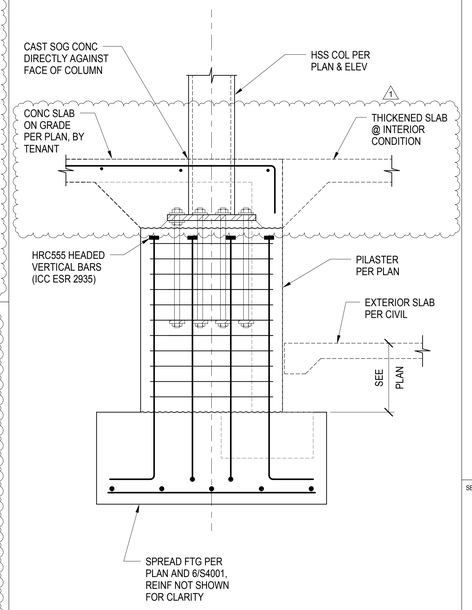

PILASTER DETAIL
3/4" = 1'-0"
11

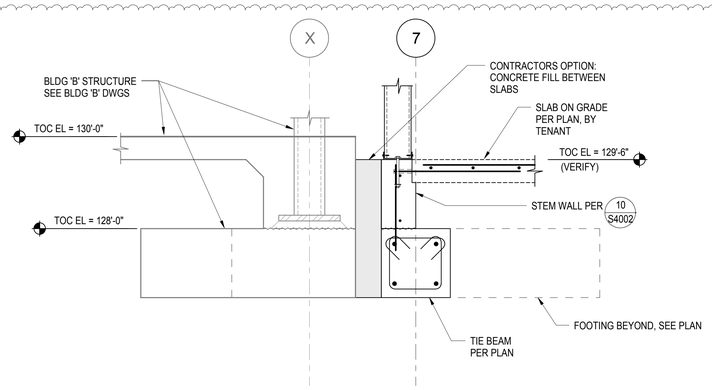

SECTION
3/4" = 1'-0"
12

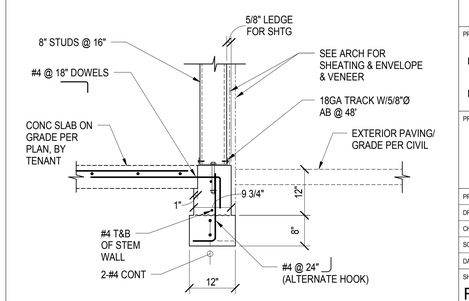

TYP EXT STUD SUPPORT (SLAB EDGE FOOTING)
3/4" = 1'-0"
16

CLIENT

CENTERCAL PROPERTIES, LLC

COPYRIGHT:

Any reproduction or distribution for any purpose other than authorized by IBI Group is forbidden. Written dimensions shall have precedence over scaled dimensions. Contractors shall verify and be responsible for all dimensions and conditions on the job, and report any errors or omissions to the architect then the dimensions and conditions shown on the drawing. Shop drawings shall be submitted to IBI Group for approval before proceeding with fabrication.

COPYRIGHT © 2016 IBI GROUP

ISSUES

NO.	ISSUANCE	STATUS	DATE
1	STRUCTURAL ADDENDUM 1		5/31/2016

SEAL

EXPIRES

SUB CONSULTANT

MARTIN & associates
JOHN A. MARTIN & ASSOCIATES
Structural Engineers
950 S. Grand Avenue
Los Angeles, Calif. 90015
Phone (213) 483-6490
Fax (213) 483-3084
J14261

PRIME CONSULTANT

IBI
IBI GROUP
18401 Von Karman Avenue, Suite 110
Irvine, CA 92612 United States
tel +1 949 833 5588 ext 146 fax +1 949 833 5511
ibigroup.com

PROJECT

The Village at Totem Lake - Building A
Kirkland, Washington

PROJECT NO:	J14261
DRAWN BY:	BK
CHKD' BY:	JC
SCALE:	AS SHOWN
DATE:	04/27/16

SHEET TITLE

FOUNDATION SECTIONS AND DETAILS

BLDG	SHEET NUMBER	ISSUE
A	S4003	

5/31/2016 2:53:17 PM C:\Users\bkirton\Documents\ATW_Totem_Bldg A_S_2016_jkirton.rvt

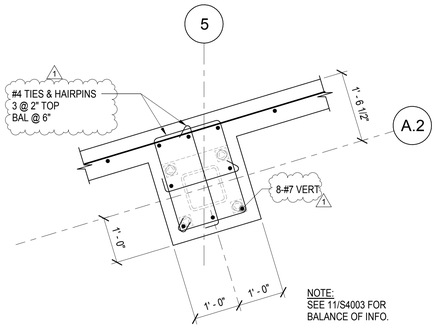

NOTE:
SEE 11/S4003 FOR
BALANCE OF INFO.

PILASTER DETAIL 5
3/4" = 1'-0"

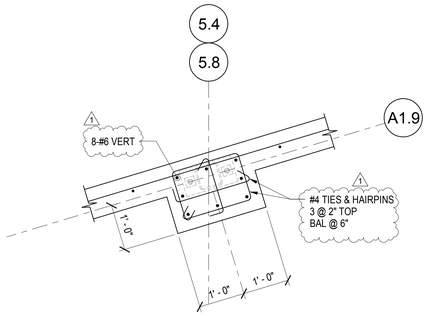

NOTE:
SEE 11/S4003 FOR
BALANCE OF INFO.

PILASTER DETAIL 4
3/4" = 1'-0"

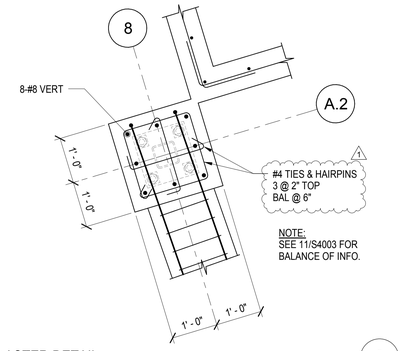

NOTE:
SEE 11/S4003 FOR
BALANCE OF INFO.

PILASTER DETAIL 3
3/4" = 1'-0"

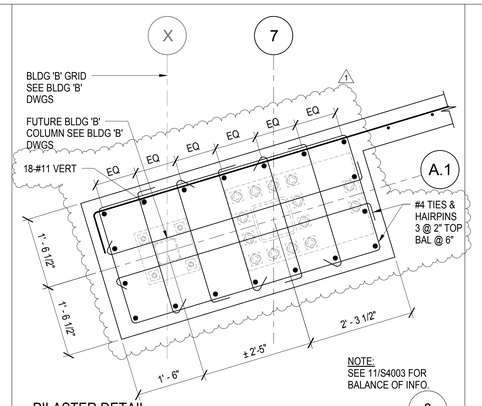

NOTE:
SEE 11/S4003 FOR
BALANCE OF INFO.

PILASTER DETAIL 2
3/4" = 1'-0"

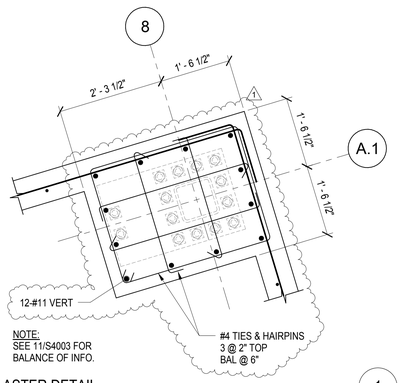

NOTE:
SEE 11/S4003 FOR
BALANCE OF INFO.

PILASTER DETAIL 1
3/4" = 1'-0"

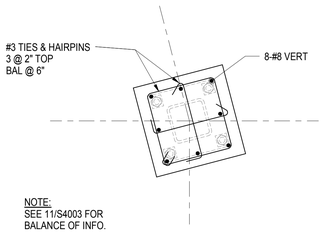

NOTE:
SEE 11/S4003 FOR
BALANCE OF INFO.

PILASTER DETAIL 10
3/4" = 1'-0"

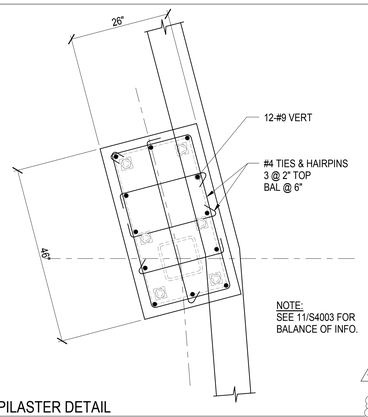

NOTE:
SEE 11/S4003 FOR
BALANCE OF INFO.

PILASTER DETAIL 9
3/4" = 1'-0"

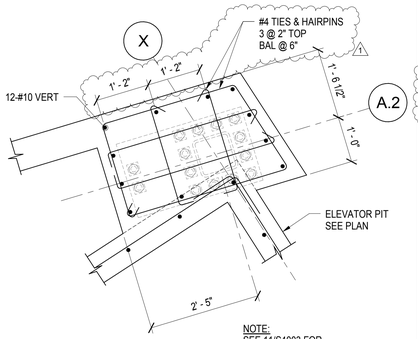

NOTE:
SEE 11/S4003 FOR
BALANCE OF INFO.

PILASTER DETAIL 8
3/4" = 1'-0"

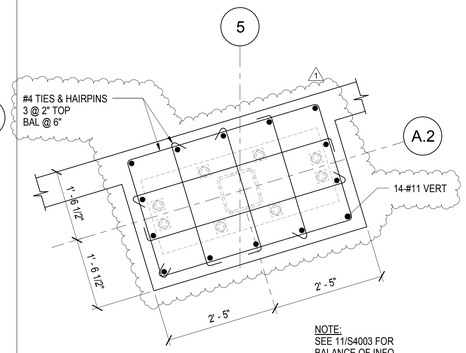

NOTE:
SEE 11/S4003 FOR
BALANCE OF INFO.

PILASTER DETAIL 7
3/4" = 1'-0"

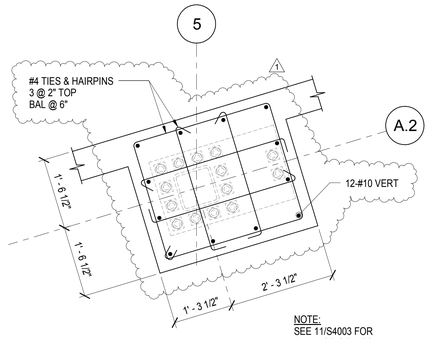

NOTE:
SEE 11/S4003 FOR
BALANCE OF INFO.

PILASTER DETAIL 6
3/4" = 1'-0"

CLIENT

CENTERCAL PROPERTIES, LLC

COPYRIGHT:

Any reproduction or distribution for any purpose other than authorized by IBI Group is forbidden. Written dimensions shall have precedence over scaled dimensions. Contractors shall verify and be responsible for all dimensions and conditions on the job, and report any errors or omissions to the Consultant then the dimensions and conditions shown on the drawing. Shop drawings shall be submitted to IBI Group for approval before proceeding with fabrication.

COPYRIGHT © 2016 IBI GROUP

ISSUES

NO.	ISSUANCE	STATUS	DATE
1	STRUCTURAL ADDENDUM 1		5/31/2016

SEAL

EXPIRES

SUB CONSULTANT

MARTIN & associates

JOHN A. MARTIN & ASSOCIATES
Structural Engineers
950 S. Grand Avenue
Los Angeles, Calif. 90015
Phone (213) 483-6490
Fax (213) 483-3084
J14261

PRIME CONSULTANT

IBI

IBI GROUP
18401 Von Karman Avenue, Suite 110
Irvine, CA 92612 United States
tel +1 949 833 5588 ext 146 fax +1 949 833 5511
ibigroup.com

PROJECT

The Village at Totem Lake - Building A
Kirkland, Washington

PROJECT NO:	J14261
DRAWN BY:	BK
CHKD BY:	JC
SCALE:	AS SHOWN
DATE:	04/27/16

SHEET TITLE

FOUNDATION SECTIONS AND DETAILS

BLDG	SHEET NUMBER	ISSUE
A	S4004	

C:\Users\bkelser\Documents\ATV_Totem_Bldg A_S_2016_bkelser.rvt

5/31/2016 2:53:19 PM

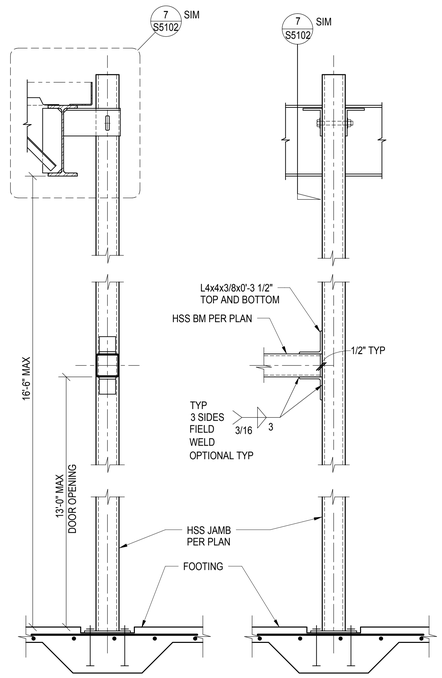

NOTE:
MAX DOOR OPENING 28'-0"

SECTION

ELEVATION

FOR INFO NOT SHOWN SEE 8/S5001.

ROLL-UP DOOR FRAMING
3/4" = 1'-0"
9

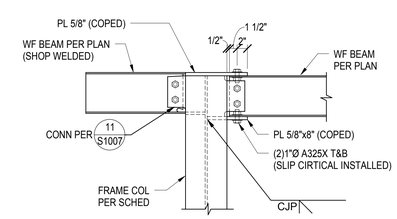

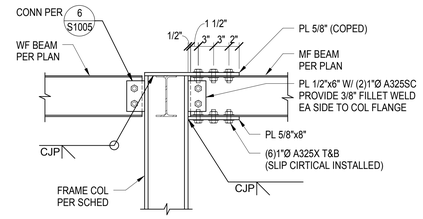

FOR BALANCE OF INFO SEE 11 S1007

SECTION @ SIMPLE MF CONNECTION (CONCEALED CONDITION ONLY)
1" = 1'-0"
2

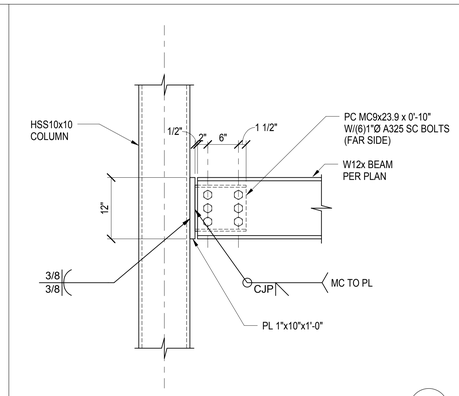

SECTION
1" = 1'-0"
1

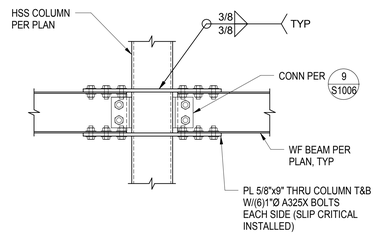

SECTION
1" = 1'-0"
8

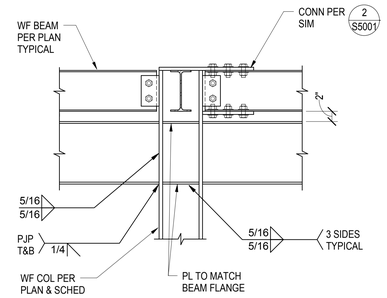

DETAIL @ EXPOSED STEEL FRAMING
1" = 1'-0"
7

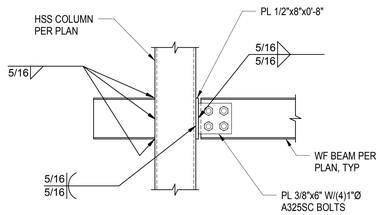

SECTION
1" = 1'-0"
6

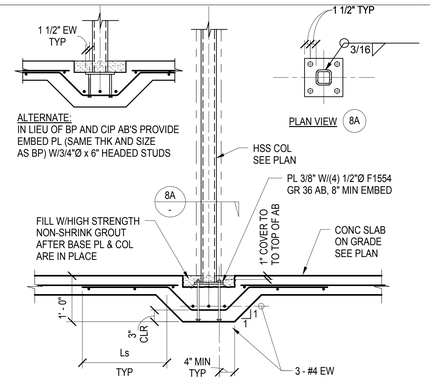

ROLL UP DOOR AND WING WALL SUPPORT POST FOUNDATION DETAIL
3/4" = 1'-0"
12

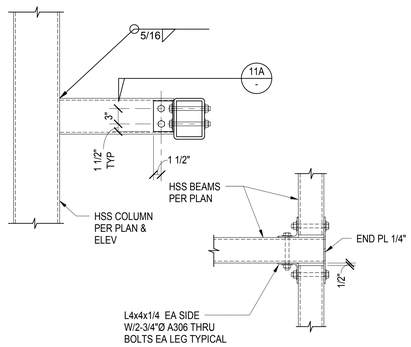

SECTION '11A'

ROLL UP DOOR SUPPORT STEEL
1" = 1'-0"
11

CLIENT

CENTERCAL PROPERTIES, LLC

COPYRIGHT:

Any reproduction or distribution for any purpose other than authorized by IBI Group is forbidden. Written dimensions shall have precedence over scaled dimensions. Contractors shall verify and be responsible for all dimensions and conditions on site. Any errors or omissions shall be reported to IBI Group then the dimensions and conditions shown on the drawing. Shop drawings shall be submitted to IBI Group for approval before proceeding with fabrication.

COPYRIGHT © 2016 IBI GROUP

ISSUES

NO.	ISSUANCE	STATUS	DATE
1	STRUCTURAL ADDENDUM 1		5/31/2016

SEAL

EXPIRES

SUB CONSULTANT

MARTIN & associates
JOHN A. MARTIN & ASSOCIATES
Structural Engineers
950 S. Grand Avenue
Los Angeles, Calif. 90015
Phone (213) 483-6490
Fax (213) 483-3084
J14261

PRIME CONSULTANT

IBI
IBI GROUP
18401 Von Karman Avenue, Suite 110
Irvine, CA 92612 United States
tel +1 949 833 5588 ext 146 fax +1 949 833 5511
ibigroup.com

PROJECT

The Village at Totem Lake - Building A
Kirkland, Washington

PROJECT NO:	J14261
DRAWN BY:	Author
CHKD BY:	Checker
SCALE:	AS SHOWN
DATE:	04/27/16

SHEET TITLE

STEEL FRAMING DETAILS

BLDG	SHEET NUMBER	ISSUE
A	S5001	1

5/31/2016 2:53:19 PM C:\Users\bkirton\Documents\ATV_Totem_Bldg A_S_2016_bkirton.rvt

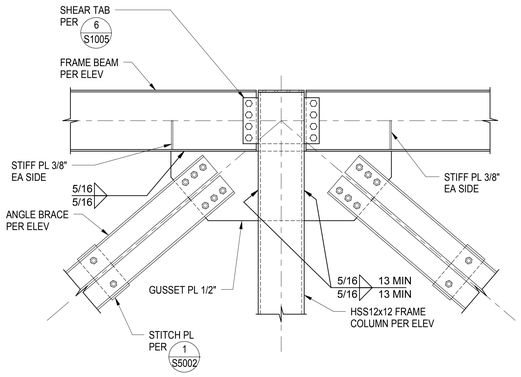

NOTE:
SEE 3/- FOR INFORMATION NOT SHOWN

BRACED FRAME DETAIL 4
3/4" = 1'-0"

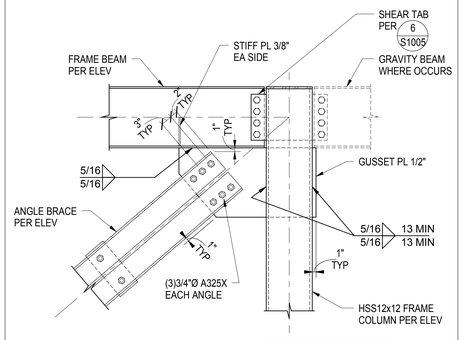

NOTE:
SEE 1/- FOR INFORMATION NOT SHOWN

BRACED FRAME DETAIL 3
3/4" = 1'-0"

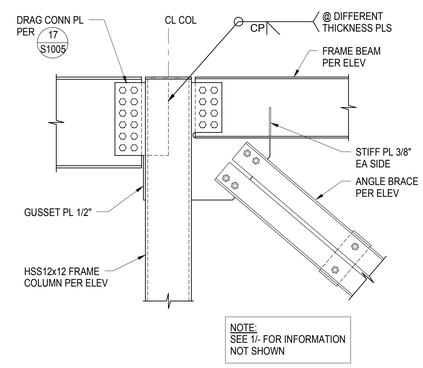

NOTE:
SEE 1/- FOR INFORMATION NOT SHOWN

BRACED FRAME DETAIL 2
3/4" = 1'-0"

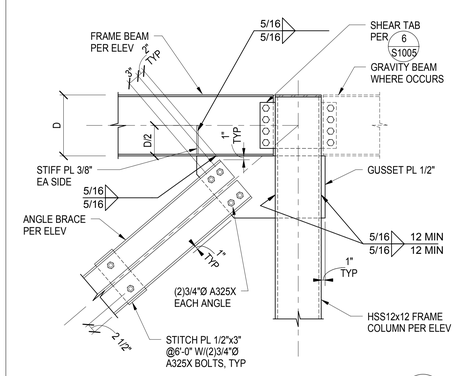

BRACED FRAME DETAIL 1
3/4" = 1'-0"

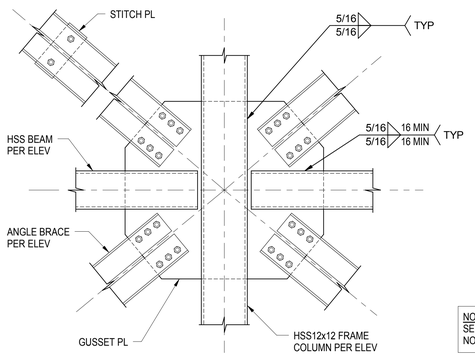

NOTE:
SEE 3/- FOR INFORMATION NOT SHOWN

BRACED FRAME DETAIL 9
3/4" = 1'-0"

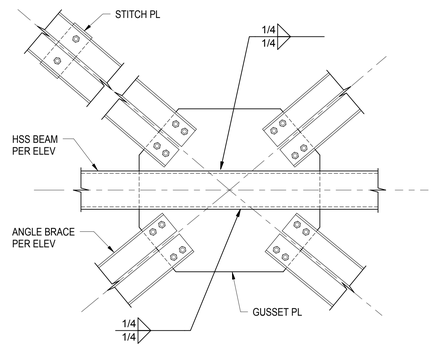

NOTE:
SEE 1/- FOR INFORMATION NOT SHOWN

BRACED FRAME DETAIL 7
3/4" = 1'-0"

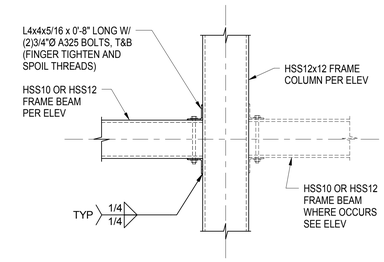

DETAIL 6
3/4" = 1'-0"

NOTE:
SEE 3/- FOR INFORMATION NOT SHOWN

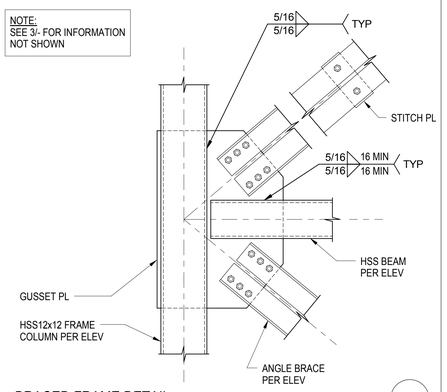

BRACED FRAME DETAIL 13
3/4" = 1'-0"

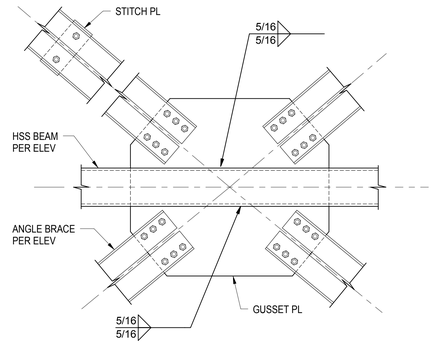

NOTE:
SEE 3/- FOR INFORMATION NOT SHOWN

BRACED FRAME DETAIL 12
3/4" = 1'-0"

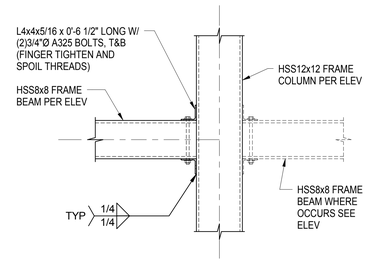

DETAIL 11
3/4" = 1'-0"

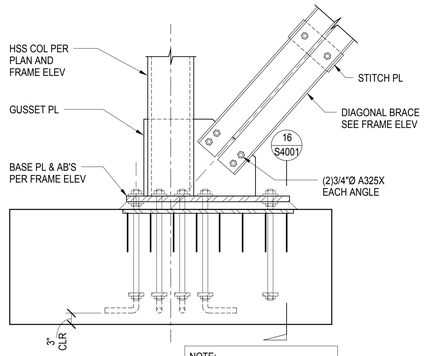

NOTE:
SEE 18/S4001 FOR INFORMATION NOT SHOWN.

BRACED FRAME DETAIL 16
3/4" = 1'-0"

CLIENT

CENTERCAL PROPERTIES, LLC

COPYRIGHT:

Any reproduction or distribution for any purpose other than authorized by IBI Group is forbidden. Written dimensions shall have precedence over scaled dimensions. Contractors shall verify and be responsible for all dimensions and conditions on the job, and report any errors or omissions to the architect then the dimensions and conditions shown on the drawing. Shop drawings shall be submitted to IBI Group for approval before proceeding with fabrication.

COPYRIGHT © 2016 IBI GROUP

ISSUES

NO.	ISSUANCE	STATUS	DATE
1	STRUCTURAL ADDENDUM 1		5/31/2016

SEAL

EXPIRES

SUB CONSULTANT

MARTIN & associates
JOHN A. MARTIN & ASSOCIATES
Structural Engineers
950 S. Grand Avenue
Los Angeles, Calif. 90015
Phone (213) 483-6490
Fax (213) 483-3084
J14261

PRIME CONSULTANT

IBI
IBI GROUP
18401 Von Karman Avenue, Suite 110
Irvine, CA 92612 United States
tel +1 949 833 5588 ext 146 fax +1 949 833 5511
ibigroup.com

PROJECT

The Village at Totem Lake - Building A
Kirkland, Washington

PROJECT NO:	J14261
DRAWN BY:	Author
CHK'D BY:	Checker
SCALE:	AS SHOWN
DATE:	04/27/16

SHEET TITLE

STEEL FRAMING DETAILS

BLDG	SHEET NUMBER	ISSUE
A	S5002	1

5/31/2016 2:53:21 PM C:\Users\bkrisor\Documents\ATV_Totem_Bldg A_S_2016_bkrisor.rvt

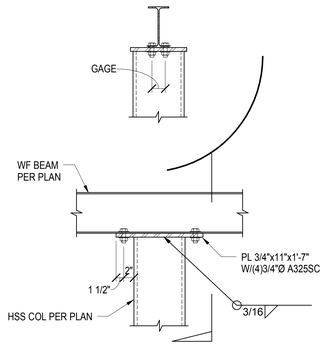

DETAIL 5
1" = 1'-0"

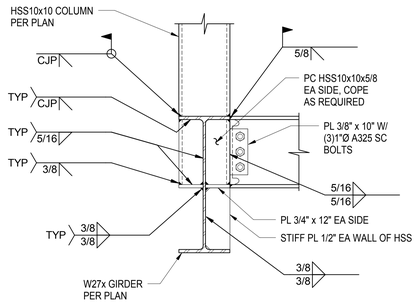

DETAIL 4
1" = 1'-0"

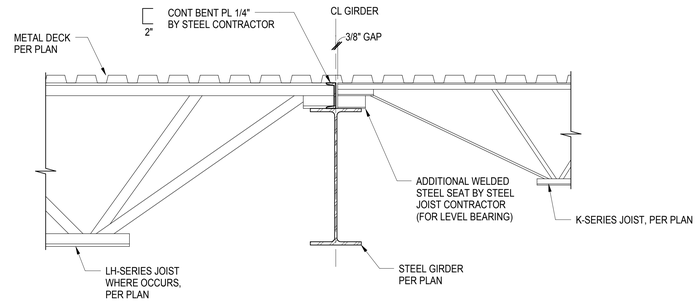

STEEL JOIST @ STEEL GIRDER 2
1" = 1'-0"

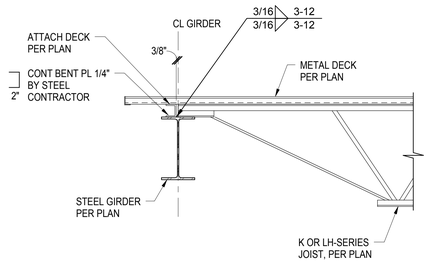

NOTE:
SEE SHEET S1004 FOR
ADDITIONAL INFORMATION

STEEL JOIST @ STEEL GIRDER 1
1" = 1'-0"

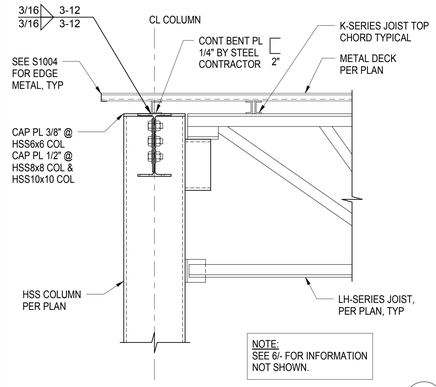

NOTE:
SEE 6/- FOR INFORMATION
NOT SHOWN.

LH-SERIES GIRDER @ PERIMETER COLUMN 8
1" = 1'-0"

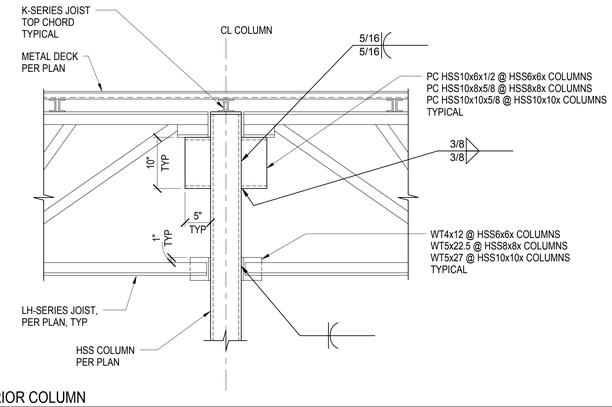

LH SERIES GIRDER @ INTERIOR COLUMN 6
1" = 1'-0"

CLIENT

CENTERCAL
PROPERTIES, LLC

COPYRIGHT:

Any reproduction or distribution for any purpose other than authorized by IBI Group is forbidden. Written dimensions shall have precedence over scaled dimensions. Contractors shall verify and be responsible for all dimensions and conditions on the job, and report any errors or omissions to the Consultant then the dimensions and conditions shown on the drawing. Shop drawings shall be submitted to IBI Group for approval before proceeding with fabrication.

COPYRIGHT © 2016 IBI GROUP

ISSUES

NO.	ISSUANCE	STATUS	DATE
1	STRUCTURAL ADDENDUM 1		5/31/2016

SEAL

EXPIRES

SUB CONSULTANT

MARTIN & associates
JOHN A. MARTIN
& ASSOCIATES
Structural Engineers
950 S. Grand Avenue
Los Angeles, Calif. 90015
Phone (213) 483-6490
Fax (213) 483-3084
J14261

PRIME CONSULTANT

IBI
IBI GROUP
18401 Von Karman Avenue, Suite 110
Irvine, CA 92612 United States
tel +1 949 833 5588 ext 146 fax +1 949 833 5511
ibigroup.com

PROJECT

The Village at Totem
Lake - Building A
Kirkland, Washington

PROJECT NO:	J14261
DRAWN BY:	Author
CHKD BY:	Checker
SCALE:	AS SHOWN
DATE:	04/27/16

SHEET TITLE

STEEL ROOF
FRAMING DETAILS

BLDG	SHEET NUMBER	ISSUE
A	S5011	1

C:\Users\bkelson\Documents\ATV_Totem_Bldg A_S_2016_bkelson.rvt

5/31/2016 2:53:22 PM

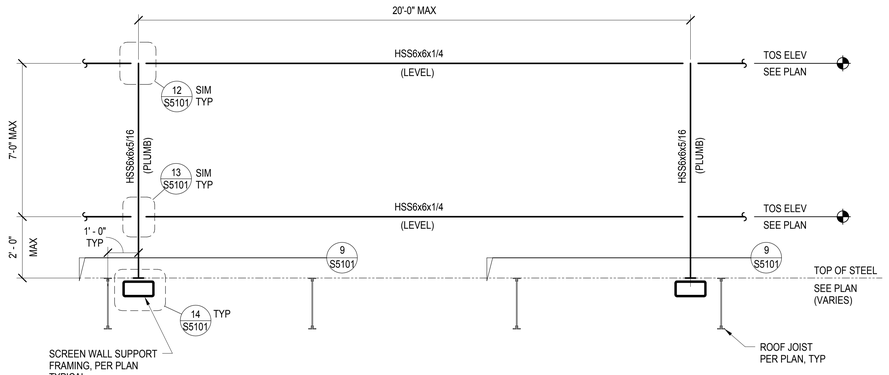

TYPICAL SCREEN WALL ELEVATION 7'-7" TO 9'-6" MAX
1/2" = 1'-0"
3

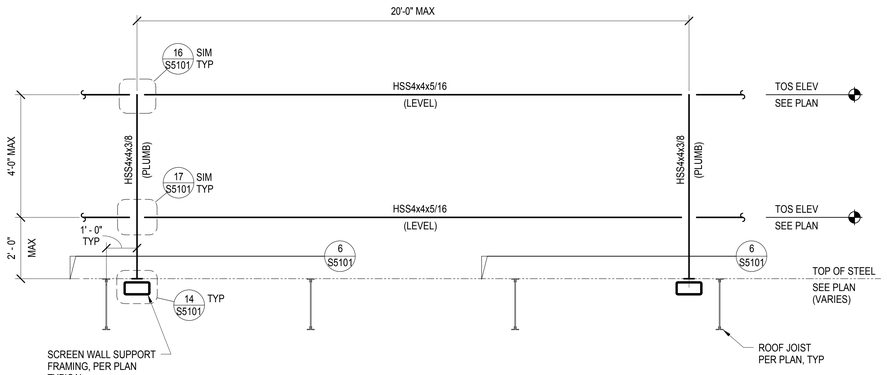

TYPICAL SCREEN WALL ELEVATION 7'-6" MAX
1/2" = 1'-0"
1

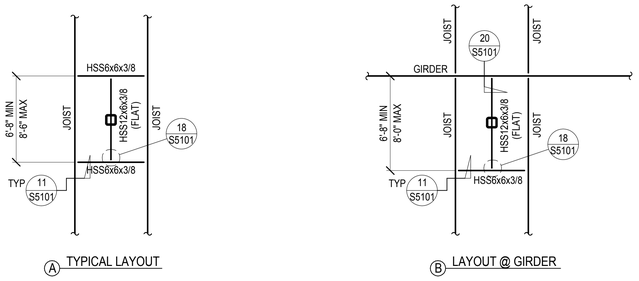

A TYPICAL LAYOUT

B LAYOUT @ GIRDER

TYPICAL SCREEN WALL PLAN
1/2" = 1'-0"
9

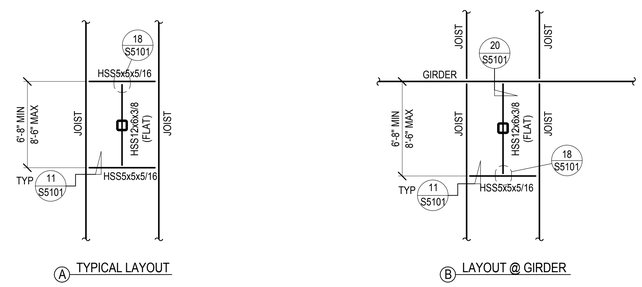

A TYPICAL LAYOUT

B LAYOUT @ GIRDER

TYPICAL SCREEN WALL PLAN
1/2" = 1'-0"
6

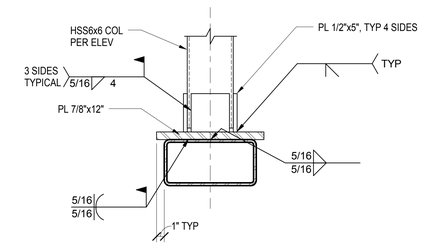

HSS6x6x SCREEN WALL COLUMN

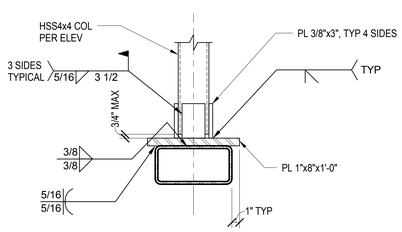

HSS4x4x SCREEN WALL COLUMN

SCREEN WALL BASE DETAIL
1 1/2" = 1'-0"
14

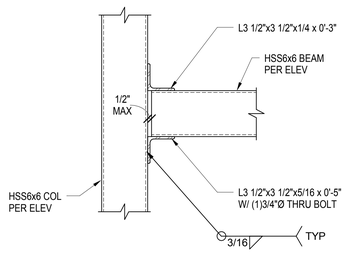

DETAIL
1 1/2" = 1'-0"
13

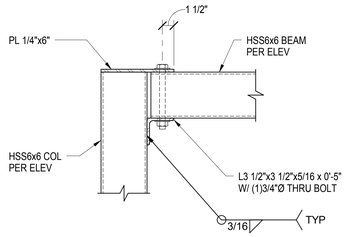

DETAIL
1 1/2" = 1'-0"
12

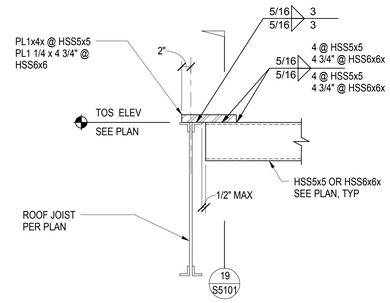

DETAIL
1 1/2" = 1'-0"
11

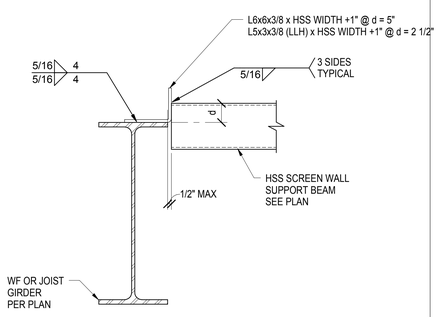

SCREEN WALL SUPPORT @ GIRDER
1 1/2" = 1'-0"
20

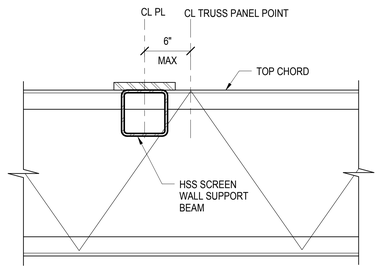

NOTE:
STEEL FABRICATION TO COORDINATE WITH TRUSS MFR TO LOCATE HSS.

DETAIL
1 1/2" = 1'-0"
19

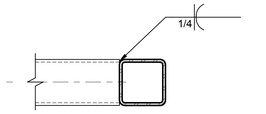

SECTION '18A'

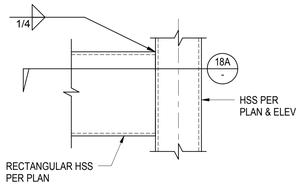

DETAIL
1 1/2" = 1'-0"
18

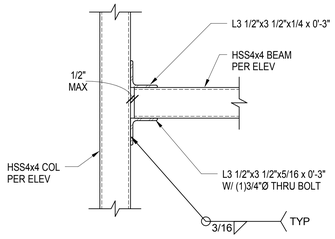

DETAIL
1 1/2" = 1'-0"
17

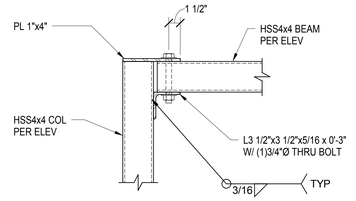

DETAIL
1 1/2" = 1'-0"
16

CLIENT

CENTERCAL PROPERTIES, LLC

COPYRIGHT:

Any reproduction or distribution for any purpose other than authorized by IBI Group is forbidden. Written dimensions shall have precedence over scaled dimensions. Contractors shall verify and be responsible for all dimensions and conditions on the job, and report any errors or omissions to the consultant then the dimensions and conditions shown on the drawing. Shop drawings shall be submitted to IBI Group for approval before proceeding with fabrication.

COPYRIGHT © 2016 IBI GROUP

ISSUES

NO.	ISSUANCE	STATUS	DATE
1	STRUCTURAL ADDENDUM 1		5/31/2016

SEAL

EXPIRES

SUB CONSULTANT

MARTIN & associates
JOHN A. MARTIN & ASSOCIATES
Structural Engineers
950 S. Grand Avenue
Los Angeles, Calif. 90015
Phone (213) 483-6490
Fax (213) 483-3084
J14261

PRIME CONSULTANT

IBI GROUP
18401 Von Karman Avenue, Suite 110
Irvine, CA 92612 United States
tel +1 949 833 5588 ext 146 fax +1 949 833 5511
ibigroup.com

PROJECT

The Village at Totem Lake - Building A
Kirkland, Washington

PROJECT NO:	J14261
DRAWN BY:	Author
CHKD BY:	Checker
SCALE:	AS SHOWN
DATE:	04/27/16

SHEET TITLE

SCREEN WALL ELEVATIONS AND DETAILS

BLDG	SHEET NUMBER	ISSUE
A	S5101	1

C:\Users\bkirton\Documents\ATW_Totem_Bldg A_S_2016_bkirton.rvt

5/31/2016 2:53:23 PM

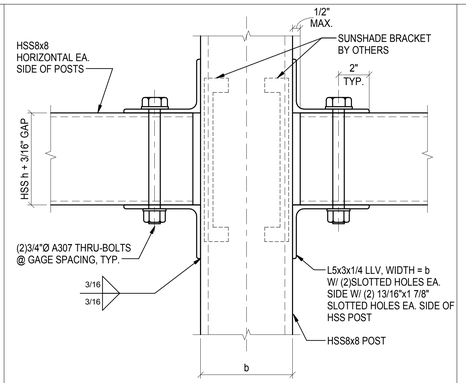

ROOF SCREEN DETAIL - HSS HORIZONTAL CONN. TO POST
3" = 1'-0"
3

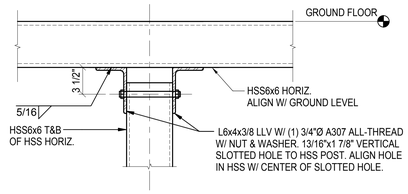

HSS POST TO HSS GIRT
1 1/2" = 1'-0"
2

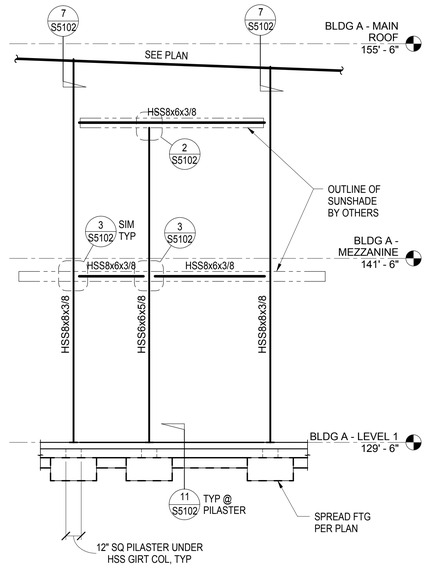

SUNSHADE HSS GIRT ELEVATION
1/4" = 1'-0"
6

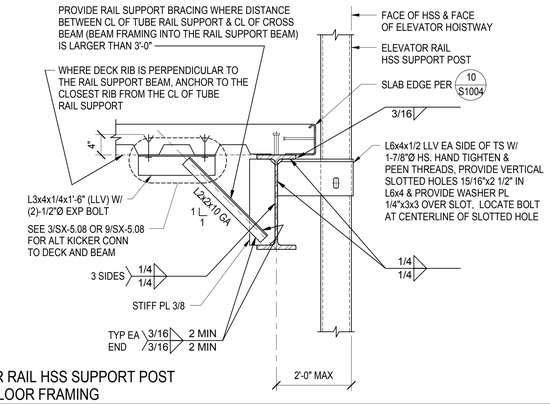

TYPICAL ELEVATOR RAIL HSS SUPPORT POST CONNECTION TO FLOOR FRAMING
1" = 1'-0"
7

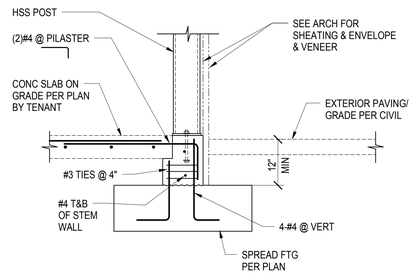

PILASTER DETAIL
3/4" = 1'-0"
11

CLIENT

CENTERCAL PROPERTIES, LLC

COPYRIGHT:

Any reproduction or distribution for any purpose other than authorized by IBI Group is forbidden. Written dimensions shall have precedence over scaled dimensions. Contractors shall verify and be responsible for all dimensions and conditions on the job, and report any errors or omissions to the architect then the dimensions and conditions shown on the drawing. Shop drawings shall be submitted to IBI Group for approval before proceeding with fabrication.

COPYRIGHT © 2016 IBI GROUP

ISSUES

NO.	ISSUANCE	STATUS	DATE
1	STRUCTURAL ADDENDUM 1		5/31/2016

SEAL

EXPIRES

SUB CONSULTANT

MARTIN & associates
JOHN A. MARTIN & ASSOCIATES
Structural Engineers
950 S. Grand Avenue
Los Angeles, Calif. 90015
Phone (213) 483-6490
Fax (213) 483-3084
J14261

PRIME CONSULTANT

IBI
IBI GROUP
18401 Von Karman Avenue, Suite 110
Irvine, CA 92612 United States
tel +1 949 833 5588 ext 146 fax +1 949 833 5511
ibigroup.com

PROJECT

The Village at Totem Lake - Building A
Kirkland, Washington

PROJECT NO:	J14261
DRAWN BY:	Author
CHKD BY:	Checker
SCALE:	AS SHOWN
DATE:	04/27/16

SHEET TITLE

SUNSHADE GIRT ELEVATIONS AND DETAILS

BLDG: A
SHEET NUMBER: S5102
ISSUE: 1

C:\Users\bkrier\Documents\ATV_Totem_Bldg A_S_2016_bkrier.rvt

5/31/2016 2:53:25 PM

DAMPERED LOUVER SCHEDULE

TENANT IS REQUESTING:
- 60 SQUARE FEET OF INTAKE LOUVER AREA AT THEIR REFRIGERATION RACK ROOM
- 131 SQUARE FEET OF INTAKE LOUVER AREA WITH AT LEAST 15' CLEARANCE TO EXH
- 131 SQUARE FEET OF EXHAUST LOUVER AREA

GRILLES, REGISTERS AND DIFFUSERS SCHEDULE

TAG	MANUFACTURER AND MODEL	NECK SIZE (IN)	FACE SIZE (IN)	MAX AIRFLOW (CFM)	MAX SP DROP (IN WG)	THROW PATTERN	BORDER TYPE	MOUNTING	NOTES
CD1	TITUS TMR	16"ø	29"ø	840	0.10	360°	SURFACE	CEILING	1, 2, 3

NOTES:
1. GRDS MAY BE SUBSTITUTED FOR EQUAL OR BETTER MANUFACTURER; REFER TO APPROVED MECHANICAL EQUIPMENT SUBMITTALS FOR FINAL SELECTIONS.
2. REFER TO FLOOR PLANS FOR DESIGN AIRFLOWS.
3. COORDINATE WITH ARCHITECT FOR FINISH COLOR FROM FULL RANGE OF MANUFACTURER'S STANDARD COLOR OPTIONS.

HEAT PUMP SCHEDULE (NON-DUCTED)

TAG	MANUFACTURER AND MODEL	DESCRIPTION	MIN COOLING PERFORMANCE			MIN HEATING PERFORMANCE		R-410A PIPING			MAX INDOOR FAN AIRFLOW (CFM)	MAX SOUND (dB-A)	CONTROLLER TYPE	FILTER TYPE	60 HERTZ ELECTRICAL				WEIGHT (LBS)	NOTES
			TOTAL (MBH)	SEER	EER	TOTAL (MBH)	HSPF	LIQUID (IN)	SUCTION (IN)	MAX LENGTH (FEET)					VOLT	PH	MCA	MOCP		
AH-A1	LENNOX MS8-HI-24P	DUCTLESS WALL	21.4	18.0	12.0	23.0	10.0	1/4	5/8	CONFIRM	470	45	WIRELESS REMOTE	–	208/230	1	16.0	25	50	1, 2, 3, 4, 5, 6, 7, 8
HP-A1	LENNOX MS8-HO-24P	OUTDOOR UNIT										56							135	

NOTES:
1. EQUIPMENT MAY BE SUBSTITUTED FOR EQUAL OR BETTER MANUFACTURER; REFER TO APPROVED MECHANICAL EQUIPMENT SUBMITTALS FOR FINAL SELECTIONS.
2. REFER TO ELECTRICAL DRAWINGS FOR MOTOR STARTER, DISCONNECT SWITCH AND CONVENIENCE OUTLET, AS APPLICABLE.
3. INCLUDES SINGLE POINT ELECTRICAL CONNECTION; INDOOR UNIT IS POWERED FROM OUTDOOR UNIT.
4. HEATING PERFORMANCE FOR HEAT PUMP ONLY AT HIGH HEAT, RATED IN ACCORDANCE WITH ARI STANDARD 340/360-7 AS APPROPRIATE.
5. PROVIDE WITH AFTER MARKET CONDENSATE PUMP; ROUTE CONDENSATE TO AN APPROVED LOCATION.
6. PROVIDE WITH MANUFACTURER'S RECOMMENDED ACCESSORIES FOR LOW AMBIENT COOLING APPLICATIONS.
7. NO AIR SIDE ECONOMIZER IS PROVIDED PER 2012 WSEC SECTION C403.3.1 EXCEPTION 1 FOR QUALIFYING SMALL EQUIPMENT (AT LEAST 15% MORE EFFICIENT THAN THE BASELINE CODE.)
8. CONFIRM FINAL SELECTION BASED ON ACTUAL ELEVATOR EQUIPMENT TO BE USED.

ELECTRIC WALL HEATER SCHEDULE

TAG	MANUFACTURER AND MODEL	APPLICATION	SIZE (IN) W x HT	CAPACITY (BTU/HR)	CAPACITY (WATTS)	60 HERTZ ELECTRICAL DATA				MOUNTING	WEIGHT (LBS)	NOTES
						VOLTS	PHASE	FLA	MOCP			
EWH-A1	QMARK GFR2004	MECHANICAL ROOM	17x8	6,826	2000	208	1	8.3	15	SURFACE	15	1, 2, 3

NOTES:
1. EQUIPMENT MAY BE SUBSTITUTED FOR EQUAL OR BETTER MANUFACTURER; REFER TO APPROVED MECHANICAL EQUIPMENT SUBMITTALS FOR FINAL SELECTIONS.
2. REFER TO ELECTRICAL DRAWINGS FOR DISCONNECT.
3. PROVIDED WITH INTEGRAL MANUAL CONTROL.

PIPING – LEGEND

- DIRECTION OF FLOW
- SUPPLY OR RETURN ELBOW SECTION UP
- SUPPLY OR RETURN ELBOW SECTION DOWN
- SUPPLY OR RETURN TEE SECTION UP
- SUPPLY OR RETURN TEE SECTION DN
- EXISTING PIPING

ABBREVIATIONS

ø	DIAMETER
ABV	ABOVE
AD	ACCESS DOOR
AFF	ABOVE FINISHED FLOOR
AHU	AIR HANDLING UNIT
AP	ACCESS PANEL
BF	BELOW FLOOR
BFC	BELOW FINISHED CEILING
BOT	BOTTOM
CD	CEILING DIFFUSER
CFM	CUBIC FEET PER MINUTE
CIP	CAST IN PLACE
CLG	CEILING
CONC	CONCRETE
CONN	CONNECTION
CW	COLD WATER
DB	DRY BULB
DN	DOWN
DWG	DRAWING
EA	EACH
EAT	ENTERING AIR TEMPERATURE
EQUIP	EQUIPMENT
ESP	EXTERNAL STATIC PRESSURE
EWT	ENTERING WATER TEMPERATURE
EXH	EXHAUST
FF	FINISHED FLOOR
FPM	FEET PER MINUTE
FT	FOOT OR FEET
FUT	FUTURE
GAL	GALLON
GALV	GALVANIZED
HP	HORSEPOWER
HT	HEIGHT
HVAC	HEATING, VENTILATION AND AIR-CONDITIONING
HWR	HEATING WATER RETURN
HWRR	HEATING WATER REVERSE RETURN
HWS	HEATING WATER SUPPLY
IBC	INTERNATIONAL BUILDING CODE
ID	INSIDE DIAMETER
IMC	INTERNATIONAL MECHANICAL CODE
IN	INCHES
IN WG	INCHES WATER GAUGE
LAT	LEAVING AIR TEMPERATURE
LBS	POUNDS
LIN FT	LINEAR FOOT OR FEET
LWT	LEAVING WATER TEMPERATURE
MAX	MAXIMUM
MBH	1000 BRITISH THERMAL UNITS PER HOUR
MD	MOTORIZED DAMPER
MIN	MINIMUM
MOCP	MAX OVER CURRENT PROTECTION
MTD	MOUNTED
MUA	MAKE UP AIR
N/A	NOT APPLICABLE
NC	NORMALLY CLOSED
NO	NORMALLY OPEN OR NUMBER
OBD	OPPOSED BLADE DAMPER
OD	OUTSIDE DIAMETER/DIMENSION
OSA	OUTSIDE AIR
PH	PHASE
POC	POINT OF CONNECTION
PRESS	PRESSURE
PSI	POUNDS PER SQUARE INCH
RA	RETURN AIR
RL	REFRIGERANT LIQUID LINE
RPBP	REDUCED PRESSURE BACKFLOW PREVENTER
RPM	REVOLUTIONS PER MINUTE
RS	REFRIGERANT SUCTION LINE
SA	SUPPLY AIR
SOG	SLAB ON GRADE
SL	SOUND LINED
SMACNA	SHEET METAL AND AIR-CONDITIONING CONTRACTOR'S NATIONAL ASSOCIATION
SQ FT	SQUARE FOOT OR FEET
SS	STAINLESS STEEL
TDH	TOTAL DYNAMIC HEAD
TG	TRANSFER GRILLE
TYP	TYPICAL
UNO	UNLESS NOTED OTHERWISE
UPC	UNIFORM PLUMBING CODE
VTR	VENT THROUGH ROOF
W	WATTS OR WIDTH
W/	WITH
W/O	WITHOUT
WB	WET BULB
WG	WATER GAUGE
WSEC	WASHINGTON STATE ENERGY CODE

GENERAL NOTES

1. HVAC SYSTEMS HAVE BEEN DESIGNED PER THE REQUIREMENTS OF THE FOLLOWING CODES:
   - 2012 WASHINGTON STATE ENERGY CODE (WASHINGTON ADMINISTRATIVE CODE (WAC) CHAPTER 51-11C)
   - 2012 INTERNATIONAL BUILDING CODE WITH WASHINGTON STATE AMENDMENTS (WAC CHAPTER 51-50)
   - 2012 INTERNATIONAL MECHANICAL CODE WITH WASHINGTON STATE AMENDMENTS (WAC CHAPTER 51-52)
   - 2012 UNIFORM PLUMBING CODE WITH WASHINGTON STATE AMENDMENTS (WAC CHAPTER 51-56)
   - 2012 INTERNATIONAL FUEL GAS CODE WITH WASHINGTON STATE AMENDMENTS (WAC CHAPTER 51-52)
   - 2009 ICC-A117.1 ACCESSIBLE AND USABLE BUILDINGS AND FACILITIES
2. COORDINATE ALL NEW WORK WITH STRUCTURE AND OTHER TRADES.
3. FIELD VERIFY UNIT LOCATIONS, DROPS AND POSITIONS.
4. ALL LINE VOLTAGE WORK SHALL BE BY ELECTRICIAN.
5. SMOKE DETECTOR WIRE SHALL BE BY ELECTRICIAN; SIGNAL SHALL BE RECEIVED BY FIRE AND LIFE SAFETY.
6. ALL FIRE/SMOKE DAMPERS AND SMOKE DETECTORS SHALL BE POWERED BY OTHERS.
7. ALL DUCT MOUNTED SMOKE DETECTORS SHALL BE SUPPLIED AND INSTALLED BY THE MECHANICAL CONTRACTOR.
8. A 120-VOLT SERVICE RECEPTACLE SHALL BE LOCATED WITHIN 25' OF EACH PIECE OF EQUIPMENT. DISCONNECT SHALL BE BY ELECTRICAL CONTRACTOR.
9. ROOM SENSORS SHALL BE MOUNTED ON WALLS NO MORE THAN 48" ABOVE FINISHED FLOOR FOR ADA ACCESSIBILITY.
10. HVAC EQUIPMENT WEIGHTS AND LOCATIONS SHALL BE APPROVED BY STRUCTURAL ENGINEER.
11. HEATING AND COOLING LOAD CALCULATIONS USE THE FOLLOWING BUILDING THERMAL INSULATION VALUES AND DESIGN TEMPERATURES IN ACCORDANCE WITH 2012 WSEC AND THE ASHRAE RECOMMENDED OUTDOOR DESIGN TEMPERATURES FOR WASHINGTON STATE:

SUMMER OSA:	83°F DB/67°F WB	ROOF:	U = 0.031 BTU/HR/SF/°F
WINTER OSA:	17°F	WALLS:	U = 0.045 BTU/HR/SF/°F
		STOREFRONT WINDOWS:	U = 0.60 BTU/HR/SF/°F SHGC = 0.40

12. SUPPLY AND RETURN AIR DUCTWORK SHALL BE LINED WITH 1" SOUND LINER WITHIN 10' OF EQUIPMENT.
13. MAXIMUM FLEXIBLE DUCT LENGTH SHALL BE 8'-0".
14. PIPE AND DUCT DIMENSIONS SHOWN ARE NOMINAL SIZES.
15. COORDINATE ALL PIPING AND VENTING WITH BELOW GRADE FOUNDATIONS, STRUCTURE, FIRE PROTECTION AND OTHER TRADES.
16. AN ACCESSIBLE GAS SHUT-OFF VALVE SHALL BE INSTALLED WITHIN 3' OF ALL GAS APPLIANCES.
17. GAS PIPING SHALL RUN ABOVE THE ROOF, UNLESS NOTED OTHERWISE.
18. MAINTAIN 15'-0" MINIMUM DISTANCE BETWEEN OSA INTAKES AND PLUMBING VENTS, EXHAUST AND COMBUSTION AIR OUTLETS.

CODE COMPLIANCE NOTES

1. HEATING AND COOLING SYSTEMS HAVE BEEN SIZED IN ACCORDANCE WITH STANDARD ENGINEERING PRACTICES AND AS REQUIRED BY 2012 WSEC SECTIONS C403.2.1 AND C403.2.2.
2. VENTILATION SHALL BE PROVIDED IN ACCORDANCE WITH 2012 WSEC SECTION C403.2.5 USING MINIMUM REQUIRED RATES.
3. HEAT PUMP CONTROLS SHALL BE CAPABLE OF MINIMIZING THE USE OF SUPPLEMENTAL HEAT AS DESCRIBED IN 2012 WSEC SECTION C403.2.4.1.1.
4. CONTROLS SHALL BE CAPABLE OF PROVIDING 5 DEGREE DEAD BAND AS REQUIRED BY 2012 WSEC SECTION C403.2.4.2.
5. CONTROLS SHALL BE CAPABLE OF PROVIDING SEVEN DAY PROGRAMMABLE TEMPERATURE SETTINGS, AUTOMATIC SETBACK AND SHUTOFF AND OPTIMUM START AS REQUIRED BY 2012 WSEC SECTION C403.2.4.3.
6. MOTORIZED AND GRAVITY DAMPERS SHALL BE PROVIDED AS REQUIRED BY 2012 WSEC SECTION C403.2.4.4, INCLUDING MAXIMUM LEAKAGE RATES IN ACCORDANCE WITH 2012 WSEC C402.4.5.2. GRAVITY DAMPERS USED FOR OUTSIDE AIR INTAKE SHALL BE PROTECTED FROM WIND INFLUENCES.
7. DUCT WORK SHALL BE INSULATED AND PROVIDED WITH VAPOR BARRIER AS REQUIRED BY 2012 WSEC SECTION C403.2.7 AND AS FOLLOWS:

TYPE	LOCATION	R-VALUE
OUTSIDE AIR >2800 CFM	IN CONDITIONED SPACE	REFER TO ARCH DWGS
OUTSIDE AIR <2800 CFM	IN CONDITIONED SPACE	7
SUPPLY OR RETURN	IN UNCONDITIONED SPACE	6
SUPPLY OR RETURN	OUTSIDE BUILDING	8

8. DUCT WORK SHALL BE SEALED IN ACCORDANCE WITH 2012 WSEC SECTION C403.2.7.3.
9. ALL DUCTWORK SPECIFIED SHALL BE CLASSIFIED AS LOW PRESSURE AND SHALL BE MANUFACTURED AND INSTALLED IN ACCORDANCE WITH 2012 IMC REQUIREMENTS AND CURRENT SMACNA STANDARDS FOR 2" WG, UNLESS HIGHER STATIC PRESSURES ARE INDICATED ON THE DRAWINGS.
10. MECHANICAL PIPING, IF EXPOSED TO THE ENVIRONMENT, SHALL BE PROTECTED IN ACCORDANCE WITH 2012 WSEC SECTION C403.2.8.1 AND ALL PIPING SHALL BE INSULATED AS REQUIRED BY 2012 WSEC C403.2.8 AS FOLLOWS:

FLUID OPERATING TEMPERATURE (°F)	PIPE SIZE (INCHES)	MINIMUM INSULATION THICKNESS (INCHES)
105-140	<1-1/2	1
105-140	1-1/2 AND LARGER	1-1/2
40-60	<1-1/2	1/2
40-60	1-1/2 AND LARGER	1

11. AIRSIDE ECONOMIZERS SHALL BE USED AS A FIRST STAGE OF COOLING AND SHALL BE CAPABLE OF PROVIDING FULL OR PARTIAL COOLING CAPACITY DEPENDING ON THE COOLING DEMAND AND THE OUTSIDE AIR TEMPERATURE IN ACCORDANCE WITH 2012 WSEC SECTION C403.3.1 OR C403.4.1.
12. SUPPLY AIR TEMPERATURE RESET BASED ON OUTSIDE AIR TEMPERATURE SHALL BE PROVIDED AS REQUIRED BY 2012 WSEC SECTION C403.4.5.4.
13. PROVIDE SEISMIC BRACING AND SUPPORTS IN ACCORDANCE WITH 2012 IBC FOR SEISMIC DESIGN CATEGORY D AND BASED ON AN IMPORTANCE FACTOR OF 1.0 FOR ALL SYSTEMS, EXCEPTING THE GAS PIPING SHALL HAVE AN IMPORTANCE FACTOR OF 1.5.
14. HVAC SYSTEMS HAVE BEEN DESIGNED TO COMPLY WITH 2012 WSEC SECTION C302.1 AND TO MAINTAIN 72°F MAX IN HEATING MODE AND 75° MIN IN COOLING MODE.
15. PROVIDE EACH INDIVIDUAL GRILLE, REGISTER, DIFFUSER AND OUTSIDE AIR CONNECTION WITH A VOLUME DAMPER OR OTHER MEANS OF ADJUSTMENT AS REQUIRED BY 2012 IMC, SECTION 603.18.

COMPLETION AND COMMISSIONING FOR MECHANICAL

COMMISSIONING OF MECHANICAL SYSTEMS AND CONTROLS SHALL BE PROVIDED AS REQUIRED IN ACCORDANCE WITH 2012 WSEC SECTION C408.2. COPIES OF ALL APPLICABLE SERVICE AND EQUIPMENT DATA, AND PROJECT DOCUMENTATION THAT RELATES, SHALL BE PROVIDED TO THE OWNER AND MADE AVAILABLE TO THE AUTHORITIES HAVING JURISDICTION (AHJS) WITHIN 90 DAYS OF RECEIPT OF THE CERTIFICATE OF OCCUPANCY INCLUDING:
1. PRELIMINARY COMMISSIONING REPORT AND OTHER RELATED REPORTS SUCH AS AIR BALANCING, START-UP AND/OR PRESSURE TESTING DATA.
2. RECORD DRAWINGS DEPICTING FINAL INSTALLATION CONFIGURATIONS OF SYSTEMS AND EQUIPMENT.
3. OPERATION AND MAINTENANCE EQUIPMENT MANUALS INCLUDING: MANUFACTURER'S INFORMATION WITH SPECIFIC MODEL NUMBERS AND OPTIONS NOTED, CONTROLS DATA INCLUDING CALIBRATION AND SETPOINT INFORMATION, AND A SIMPLE NARRATIVE DESCRIPTION OF EACH SYSTEM.

IN ADDITION, TRAINING OF THE MAINTENANCE STAFF SHALL BE PROVIDED AS REQUIRED BY 2012 WSEC SECTION C408.1.4, INCLUDING REVIEW OF DOCUMENTATION, HANDS-ON DEMONSTRATION OF OPERATION AND START-UP PROCEDURES AS WELL AS A TRAINING COMPLETION REPORT.

WHOLE BUILDING AND COMMISSIONING OF SYSTEMS THAT ARE NOT INCLUDED IN THE MECHANICAL SCOPE SHALL BE PROVIDED IN ACCORDANCE WITH 2012 WSEC SECTION C408.1 BY OTHERS.

VICINITY MAP

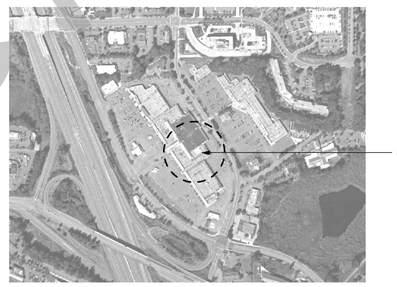

HVAC – LEGEND

- AIR FLOW DIRECTION
- SUPPLY OR OSA DUCT SECTION UP, ROUND OR RECTANGULAR
- RETURN, RELIEF OR EXHAUST DUCT SECTION UP, ROUND OR RECTANGULAR
- SUPPLY OR OSA DUCT SECTION DOWN, ROUND OR RECTANGULAR
- RETURN, RELIEF OR EXHAUST DUCT SECTION DOWN, ROUND OR RECTANGULAR
- RG – 100: RETURN AIR GRILLE, NUMBER INDICATES CFM QUANTITY
- CD – 100: SUPPLY AIR DIFFUSER, NUMBER INDICATES CFM QUANTITY
- EG – 100: EXHAUST AIR GRILLE, NUMBER INDICATES CFM QUANTITY
- SLSM: SOUND LINED SHEET METAL
- FLEXIBLE EQUIPMENT CONNECTION
- SFD: COMBINATION FIRE AND SMOKE DAMPER
- FD: FIRE DAMPER
- VOLUME DAMPER
- M: MOTORIZED DAMPER
- TURNING VANES
- ROUND TO ROUND 45° FITTING
- SQUARE TO SQUARE 45° FITTING
- SQUARE TO ROUND 45° FITTING
- 45° FITTING FOR DUCTWORK
- GAS: GAS PIPING
- C: CARBON MONOXIDE SENSOR
- O: OCCUPANCY OR CARBON DIOXIDE SENSOR
- P: COORDINATED POWER LOCATION
- S: REMOTE SENSOR
- T: THERMOSTAT
- TERMINAL UNIT REQUIRED EQUIPMENT CLEARANCE

BUILDING OWNER

CENTERCAL PROPERTIES, INC.
1600 EAST FRANKLIN AVENUE
EL SEGUNDO, CA 90245
(310) 563-6900

CONTACT: RICK BEASON OR PATRICK BURNS

GENERAL – LEGEND

- FTU 1: EQUIPMENT TAG TYPE; EQUIPMENT TAG NUMBER
- 1 M-01: DETAIL OR DIAGRAM NUMBER; SHEET NUMBER WHERE DETAIL/DIAGRAM SHOWN
- 1 M-01: SECTION LETTER; SHEET NUMBER WHERE SECTION IS SHOWN
- 1: REVISION CLOUD AND CHRONOLOGICAL NUMBER
- DETAIL REFERENCE OUTLINE
- POINT OF CONNECTION TO EXISTING OR TO OTHERS' WORK
- 1: KEY NOTE CALLOUT
- WORK TO BE REMOVED

LEGAL DESCRIPTION

xxx

BUILDING INFORMATION

ZONING:	COMMERCIAL TL-2
CONSTRUCTION TYPE:	III-A, FULLY SPRINKLERED
OCCUPANCY TYPE:	M – MERCHANTILE
CLIMATE ZONE:	4C KING COUNTY

MECHANICAL SCOPE – BUILDING A

SHELL AND CORE MECHANICAL WORK TO SUPPORT THE NEW CONSTRUCTION INCLUDING:
PACKAGED HEATING, VENTILATING AND AIR-CONDITIONING UNITS FOR FUTURE TENANT CONNECTION,
ELEVATOR MACHINE ROOM COOLING,
NATURAL GAS SERVICE WITH SCHEDULE 40 GALVANIZED STEEL PIPING OUTDOORS AND BLACK STEEL INDOORS FOR FUTURE TENANT CONN,
OUTSIDE AIR AND EXHAUST LOUVERS FOR FUTURE TENANT CONN,
ELECTRIC HEAT FOR FREEZE PROTECTION,
AND FINISH OUT OF TWO PACKAGED UNITS INCLUDING DUCTWORK, INSULATION, DIFFUSERS, CONTROLS AND PIPING.

DRAWING INDEX – BUILDING A

SHEET #	SHEET TITLE
M0001A	MECHANICAL COVER SHEET
M0002A	MECHANICAL EQUIPMENT SCHEDULES
M1001A	SITE PLAN – MECHANICAL
M2101A	FIRST FLOOR PLAN – MECHANICAL
M2102A	MEZZANINE PLAN – MECHANICAL
M2801A	ROOF PLAN – MECHANICAL
**M3.01A **	**EXTERIOR ELEVATIONS – MECHANICAL SHEET NOT INCLUDED IN THIS PROGRESS PRINTING

NOT FOR CONSTRUCTION

COPYRIGHT NOTICE
THIS LAYOUT/DESIGN IS AN UNPUBLISHED WORK, AND MERIT MECHANICAL HEREBY RESERVES ITS COMMON LAW RIGHT, PURSUANT TO TITLE 17 SECTION 2 OF THE USA CODE TO PREVENT UNAUTHORIZED COPYING, PUBLICATION OR USE OF THIS DESIGN, AND TO OBTAIN DAMAGES THEREFORE.

THE VILLAGE AT TOTEM LAKE
BUILDING A - LOWER MALL

KIRKLAND, WASHINGTON 98034

COMFORT SYSTEMS USA
Merit Mechanical
9630 153RD AVENUE NE
REDMOND, WA 98052
(425) 883-0224
WA LICENSE: MERITM163CM
WWW.MERITMECHANICAL.COM

REVISIONS
0. FOR REVIEW MAY 16, 2016

DESIGNED: DJH
CHECKED: MTS
DATE: 1-6-2016
JOB NUMBER: 115062
SHEET TITLE: **MECHANICAL COVER SHEET**
SHEET NUMBER: M0001A

Air System Sizing Summary for RTU-A1

Project Name: 115062 Village at Totem Lake — 05/16/2016
Prepared by: Merit Mechanical, Inc. — 01:50PM

Air System Information

Air System Name	RTU-A1	Number of zones	1
Equipment Class	PKG ROOF	Floor Area	760.0 ft²
Air System Type	SZCAV	Location	Seattle IAP, Washington

Sizing Calculation Information

Calculation Months	Jan to Dec	Zone CFM Sizing	Sum of space airflow rates
Sizing Data	Calculated	Space CFM Sizing	Individual peak space loads

Central Cooling Coil Sizing Data

Total coil load	3.6	Tons	Load occurs at	Sep 1400	
Total coil load	43.2	MBH	OA DB / WB	80.5 / 65.8	°F
Sensible coil load	42.3	MBH	Entering DB / WB	75.5 / 62.3	°F
Coil CFM at Sep 1400	2070	CFM	Leaving DB / WB	56.2 / 55.0	°F
Max block CFM	2070	CFM	Coil ADP	54.1	°F
Sum of peak zone CFM	2070	CFM	Bypass Factor	0.100	
Sensible heat ratio	0.979		Resulting RH	46	%
ft²/Ton	211.0		Design supply temp.	55.0	°F
BTU/(hr-ft²)	56.9		Zone T-stat Check	1 of 1	OK
Water flow @ 10.0 °F rise	N/A		Max zone temperature deviation	0.0	°F

Central Heating Coil Sizing Data

Max coil load	34.7	MBH	Load occurs at	Des Htg	
Coil CFM at Des Htg	2070	CFM	BTU/(hr-ft²)	45.6	
Max coil CFM	2070	CFM	Ent. DB / Lvg DB	68.4 / 84.1	°F
Water flow @ 20.0 °F drop	N/A				

Supply Fan Sizing Data

Actual max CFM	2070	CFM	Fan motor BHP	0.57	BHP
Standard CFM	2037	CFM	Fan motor kW	0.45	kW
Actual max CFM/ft²	2.72	CFM/ft²	Fan static	1.00	in wg

Outdoor Ventilation Air Data

Design airflow CFM	46	CFM	CFM/person	0.00	CFM/person
CFM/ft²	0.06	CFM/ft²			

Zone Sizing Summary for RTU-A1

Project Name: 115062 Village at Totem Lake — 05/16/2016
Prepared by: Merit Mechanical, Inc. — 01:50PM

Air System Information

Air System Name	RTU-A1	Number of zones	1
Equipment Class	PKG ROOF	Floor Area	760.0 ft²
Air System Type	SZCAV	Location	Seattle IAP, Washington

Sizing Calculation Information

Calculation Months	Jan to Dec	Zone CFM Sizing	Sum of space airflow rates
Sizing Data	Calculated	Space CFM Sizing	Individual peak space loads

Zone Sizing Data

Zone Name	Maximum Cooling Sensible (MBH)	Design Airflow (CFM)	Minimum Airflow (CFM)	Time of Peak Load	Maximum Heating Load (MBH)	Zone Floor Area (ft²)	Zone CFM/ft²
Zone 1	41.8	1967	1967	Sep 1400	35.0	760.0	2.59

Zone Terminal Sizing Data

No Zone Terminal Sizing Data required for this system.

Space Loads and Airflows

Zone Name / Space Name	Mult.	Cooling Sensible (MBH)	Time of Load	Air Flow (CFM)	Heating Load (MBH)	Floor Area (ft²)	Space CFM/ft²
Zone 1							
Building A large Vesti	1	41.8	Sep 1400	1967	35.0	760.0	2.59

Air System Sizing Summary for RTU-A2

Project Name: 115062 Village at Totem Lake — 05/16/2016
Prepared by: Merit Mechanical, Inc. — 01:50PM

Air System Information

Air System Name	RTU-A2	Number of zones	1
Equipment Class	PKG ROOF	Floor Area	155.0 ft²
Air System Type	SZCAV	Location	Seattle IAP, Washington

Sizing Calculation Information

Calculation Months	Jan to Dec	Zone CFM Sizing	Sum of space airflow rates
Sizing Data	Calculated	Space CFM Sizing	Individual peak space loads

Central Cooling Coil Sizing Data

Total coil load	1.4	Tons	Load occurs at	Oct 1300	
Total coil load	16.5	MBH	OA DB / WB	74.8 / 63.1	°F
Sensible coil load	16.4	MBH	Entering DB / WB	75.2 / 62.0	°F
Coil CFM at Oct 1300	803	CFM	Leaving DB / WB	56.0 / 54.7	°F
Max block CFM	803	CFM	Coil ADP	53.9	°F
Sum of peak zone CFM	803	CFM	Bypass Factor	0.100	
Sensible heat ratio	0.992		Resulting RH	46	%
ft²/Ton	112.4		Design supply temp.	55.0	°F
BTU/(hr-ft²)	106.8		Zone T-stat Check	1 of 1	OK
Water flow @ 10.0 °F rise	N/A		Max zone temperature deviation	0.0	°F

Central Heating Coil Sizing Data

Max coil load	12.3	MBH	Load occurs at	Des Htg	
Coil CFM at Des Htg	803	CFM	BTU/(hr-ft²)	79.5	
Max coil CFM	803	CFM	Ent. DB / Lvg DB	69.7 / 84.1	°F
Water flow @ 20.0 °F drop	N/A				

Supply Fan Sizing Data

Actual max CFM	803	CFM	Fan motor BHP	0.22	BHP
Standard CFM	790	CFM	Fan motor kW	0.17	kW
Actual max CFM/ft²	5.18	CFM/ft²	Fan static	1.00	in wg

Outdoor Ventilation Air Data

Design airflow CFM	9	CFM	CFM/person	0.00	CFM/person
CFM/ft²	0.06	CFM/ft²			

Zone Sizing Summary for RTU-A2

Project Name: 115062 Village at Totem Lake — 05/16/2016
Prepared by: Merit Mechanical, Inc. — 01:50PM

Air System Information

Air System Name	RTU-A2	Number of zones	1
Equipment Class	PKG ROOF	Floor Area	155.0 ft²
Air System Type	SZCAV	Location	Seattle IAP, Washington

Sizing Calculation Information

Calculation Months	Jan to Dec	Zone CFM Sizing	Sum of space airflow rates
Sizing Data	Calculated	Space CFM Sizing	Individual peak space loads

Zone Sizing Data

Zone Name	Maximum Cooling Sensible (MBH)	Design Airflow (CFM)	Minimum Airflow (CFM)	Time of Peak Load	Maximum Heating Load (MBH)	Zone Floor Area (ft²)	Zone CFM/ft²
Zone 1	16.2	763	763	Oct 1300	12.4	155.0	4.92

Zone Terminal Sizing Data

No Zone Terminal Sizing Data required for this system.

Space Loads and Airflows

Zone Name / Space Name	Mult.	Cooling Sensible (MBH)	Time of Load	Air Flow (CFM)	Heating Load (MBH)	Floor Area (ft²)	Space CFM/ft²
Zone 1							
Building A small Vestibu	1	16.2	Oct 1300	763	12.4	155.0	4.92

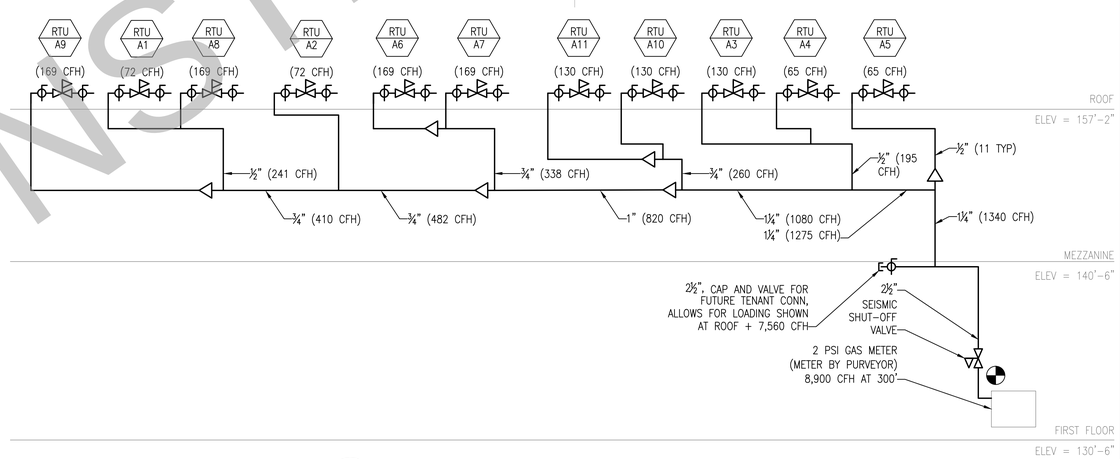

1 / M0002A — NATURAL GAS SCHEMATIC RISER DIAGRAM
SCALE: N/A (DIAGRAMS ARE REFLECTIVE OF THE ORIGINAL DESIGN AND MAY NOT BE REPRESENTATIVE OF AS-BUILT SYSTEMS)

PACKAGED ROOFTOP UNIT SCHEDULE

TAG	MANUFACTURER AND MODEL	DESCRIPTION	MIN OSA (CFM)	INDOOR FAN PERFORMANCE SA (CFM)	ESP (IN WG)	BHP	FLA	COOLING CAPACITY TOTAL (MBH)	SENSIBLE (MBH)	SEER /EER	IEER	HEATING CAPACITY INPUT (MBH)	OUTPUT (MBH)	EFFICIENCY %	GAS SIZE (INCHES)	FILTRATION DISPOSABLE # / SIZE	60 HERTZ ELECTRICAL DATA VOLTS	PHASE	MCA	MOCP	SOUND POWER (DBA)	WEIGHT (LBS)	NOTES
RTU-A1	CARRIER 48HCDA05	GAS/ELECTRIC ROOFTOP	160	1,600	1.00	1.13	2.6	50.6	38.1	15.6/–	–	72.0	56.0	82	1/2	4 / 16x16x2	460	3	13	15	78	835	1, 2, 3, 4, 5, 6, 7, 8
RTU-A2	CARRIER 48HCDA04	GAS/ELECTRIC ROOFTOP	120	1,200	1.20	1.03	2.6	39.3	29.1	15/12.5	–	72.0	56.0	82	1/2	2 / 16x25x2	460	3	11	15	76	690	1, 2, 3, 4, 5, 6, 7, 8
RTU-A3	LENNOX LGH120H4M	GAS/ELECTRIC ROOFTOP	400	4,000	1.60TSP	2.71	4.8	130.2	72.9	–/12.0	13.8	130.0	104.0	80	3/4	4 / 20x25x2	460	3	26.0	30	88	1660	1, 2, 3, 4, 5, 6, 9, 10, 11
RTU-A4	LENNOX LGH048H4E	GAS/ELECTRIC ROOFTOP	160	1,600	1.60TSP	3/4	3.1	52.7	31.1	17/12.8	–	65.0	52.0	80	1/2	4 / 16x20x2	460	3	14.0	15	75	1060	1, 2, 3, 4, 5, 6, 10, 12
RTU-A5	LENNOX LGH036H4E	GAS/ELECTRIC ROOFTOP	120	1,200	1.60TSP	1/2	2.2	37.6	22.5	17/12.5	–	65.0	52.0	80	1/2	4 / 16x20x2	460	3	12.0	15	75	1020	1, 2, 3, 4, 5, 6, 10, 12
RTU-A6	LENNOX LGH180H4M	GAS/ELECTRIC ROOFTOP	600	6,000	1.60TSP	4.35	7.6	195.8	113.5	–/12.0	13.7	169.0	135.0	80	1	6 / 24x24x2	460	3	39.0	45	93	2920	1, 2, 3, 4, 5, 9, 10, 11
RTU-A7	LENNOX LGH210H4M	GAS/ELECTRIC ROOFTOP	700	7,000	1.60TSP	5.40	11	224.4	132.4	–/12.0	14.0	169.0	135.0	80	1	6 / 24x24x2	460	3	46.0	50	94	3030	1, 2, 3, 4, 5, 9, 10, 11
RTU-A8	LENNOX LGH210H4M	GAS/ELECTRIC ROOFTOP	700	7,000	1.60TSP	5.40	11	224.4	132.4	–/12.0	14.0	169.0	135.0	80	1	6 / 24x24x2	460	3	46.0	50	94	3030	1, 2, 3, 4, 5, 9, 10, 11
RTU-A9	LENNOX LGH180H4M	GAS/ELECTRIC ROOFTOP	600	6,000	1.60TSP	4.35	7.6	195.8	113.5	–/12.0	13.7	169.0	135.0	80	1	6 / 24x24x2	460	3	39.0	45	93	2920	1, 2, 3, 4, 5, 9, 10, 11
RTU-A10	LENNOX LGH092H4M	GAS/ELECTRIC ROOFTOP	300	3,000	1.60TSP	1.86	4.8	97.3	56.4	–/12.5	14.0	130.0	104.0	80	3/4	4 / 20x25x2	460	3	22.0	25	88	1610	1, 2, 3, 4, 5, 6, 9, 10, 11
RTU-A11	LENNOX LGH120H4M	GAS/ELECTRIC ROOFTOP	400	4,000	1.60TSP	2.71	4.8	130.2	72.9	–/12.0	13.8	130.0	104.0	80	3/4	4 / 20x25x2	460	3	26.0	30	88	1660	1, 2, 3, 4, 5, 6, 9, 10, 11

NOTES:
1. EQUIPMENT MAY BE SUBSTITUTED FOR EQUAL OR BETTER MANUFACTURER; REFER TO APPROVED MECHANICAL EQUIPMENT SUBMITTALS FOR FINAL SELECTIONS. DESIGN CRITERIA FOR THIS BUILDING IS 400 SF/TON PER THE LANDLORDS REQUIREMENTS.
2. REFER TO ELECTRICAL DRAWINGS FOR MOTOR STARTER, DISCONNECT, AND POWERED CONVENIENCE OUTLET, AS APPLICABLE.
3. PROVIDE WITH MANUFACTURER'S ECONOMIZER OPTION.
4. PROVIDE WITH THERMOSTATIC CONTROLS THAT ARE CONSISTENT WITH THE INDIVIDUAL TENANT'S CONTROL STANDARDS, INCLUDING TENANT SPECIFIED RCB ENERGY MANAGEMENT BOARD IN EACH RTU AND SPACE TEMPERATURE AND HUMIDITY INPUTS, FOR USE BY THE TENANT PROVIDED BMS.
5. PROVIDE WITH MOTORIZED DAMPERS AT BUILDING ENVELOPE PENETRATIONS OF OUTSIDE AIR, RELIEF AND EXHAUST DUCTS AS REQUIRED BY 2012 WSEC SECTION C402.4.5.2 (120 VOLTS, SINGLE PHASE, 15 MOCP).
6. PROVIDE WITH BACK DRAFT DAMPER AT BUILDING ENVELOPE PENETRATION AS ALLOWED BY 2012 WSEC SECTION C403.2.4.4, EXCEPTION (1) FOR RELIEF OF SYSTEMS WITH LESS THAN 5,000 CFM OF SUPPLY AIR FLOW AND IN BUILDINGS LESS THAN 3 STORIES IN HEIGHT.
7. PROVIDE WITH MANUFACTURER'S DOWNFLOW SPRING ISOLATION ROOF CURB OPTION.
8. PROVIDE WITH MANUFACTURER'S MEDIUM STATIC INDOOR FAN MOTOR OPTION.
9. PROVIDE WITH RETURN AIR SMOKE DETECTOR AS REQUIRED BY 2012 IMC SECTION 606.2 FOR SYSTEMS WITH MORE THAN 2000 CFM SUPPLY.
10. PROVIDE WITH MANUFACTURER'S ADJUSTABLE PITCH DOWNFLOW ROOF CURB OPTION.
11. PROVIDE WITH MANUFACTURER'S MULTI STAGE SUPPLY AIR BLOWER MOTOR OPTION.
12. PROVIDE WITH MANUFACTURER'S ECM SUPPLY AIR BLOWER MOTOR OPTION.

NOT FOR CONSTRUCTION

COPYRIGHT NOTICE
THIS LAYOUT/DESIGN IS AN UNPUBLISHED WORK, AND MERIT MECHANICAL HEREBY RESERVES ITS COMMON LAW RIGHT, PURSUANT TO TITLE 17 SECTION 2 OF THE USA CODE TO PREVENT UNAUTHORIZED COPYING, PUBLICATION OR USE OF THIS DESIGN, AND TO OBTAIN DAMAGES THEREFORE.

THE VILLAGE AT TOTEM LAKE
BUILDING A - LOWER MALL
KIRKLAND, WASHINGTON 98034

COMFORT SYSTEMS USA
Merit Mechanical
9630 153RD AVENUE NE
REDMOND, WA 98052
(425) 883-9224
WA LICENSE: MERITM163CM
WWW.MERITMECHANICAL.COM

REVISIONS
0. FOR REVIEW — MAY 16, 2016

DESIGNED: DJH
CHECKED: MTS
DATE: 1-6-2016
JOB NUMBER: 115062
SHEET TITLE: EQUIPMENT SCHEDULES
SHEET NUMBER: M0002A

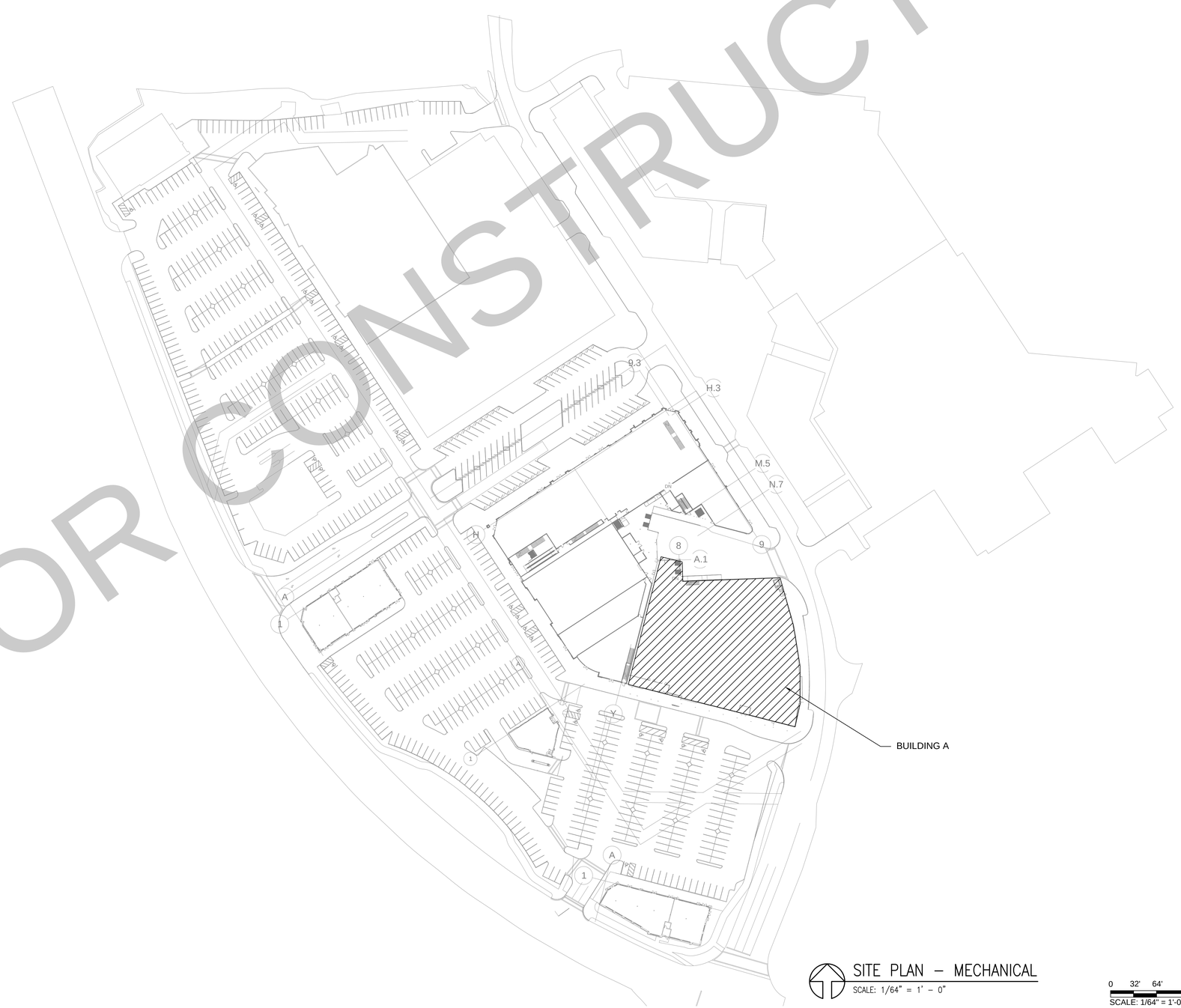

SITE PLAN – MECHANICAL
SCALE: 1/64" = 1' – 0"

0 32' 64' 128'
SCALE: 1/64" = 1'-0"

NOT FOR CONSTRUCTION

COPYRIGHT NOTICE
THIS LAYOUT/DESIGN IS AN UNPUBLISHED WORK, AND MERIT MECHANICAL HEREBY RESERVES ITS COMMON LAW RIGHT, PURSUANT TO TITLE 17 SECTION 2 OF THE USA CODE TO PREVENT UNAUTHORIZED COPYING, PUBLICATION OR USE OF THIS DESIGN, AND TO OBTAIN DAMAGES THEREFORE.

THE VILLAGE AT TOTEM LAKE
BUILDING A - LOWER MALL

KIRKLAND, WASHINGTON 98034

COMFORT SYSTEMS USA
Merit Mechanical
9630 153RD AVENUE NE
REDMOND, WA 98052
(425) 883-9224
WA LICENSE: MERITM163CM
WWW.MERITMECHANICAL.COM

REVISIONS
0. FOR REVIEW MAY 16, 2016

DESIGNED
DJH

CHECKED
MTS

DATE
1-6-2016

JOB NUMBER
115062

SHEET TITLE
SITE PLAN - MECHANICAL

SHEET NUMBER
M1001A

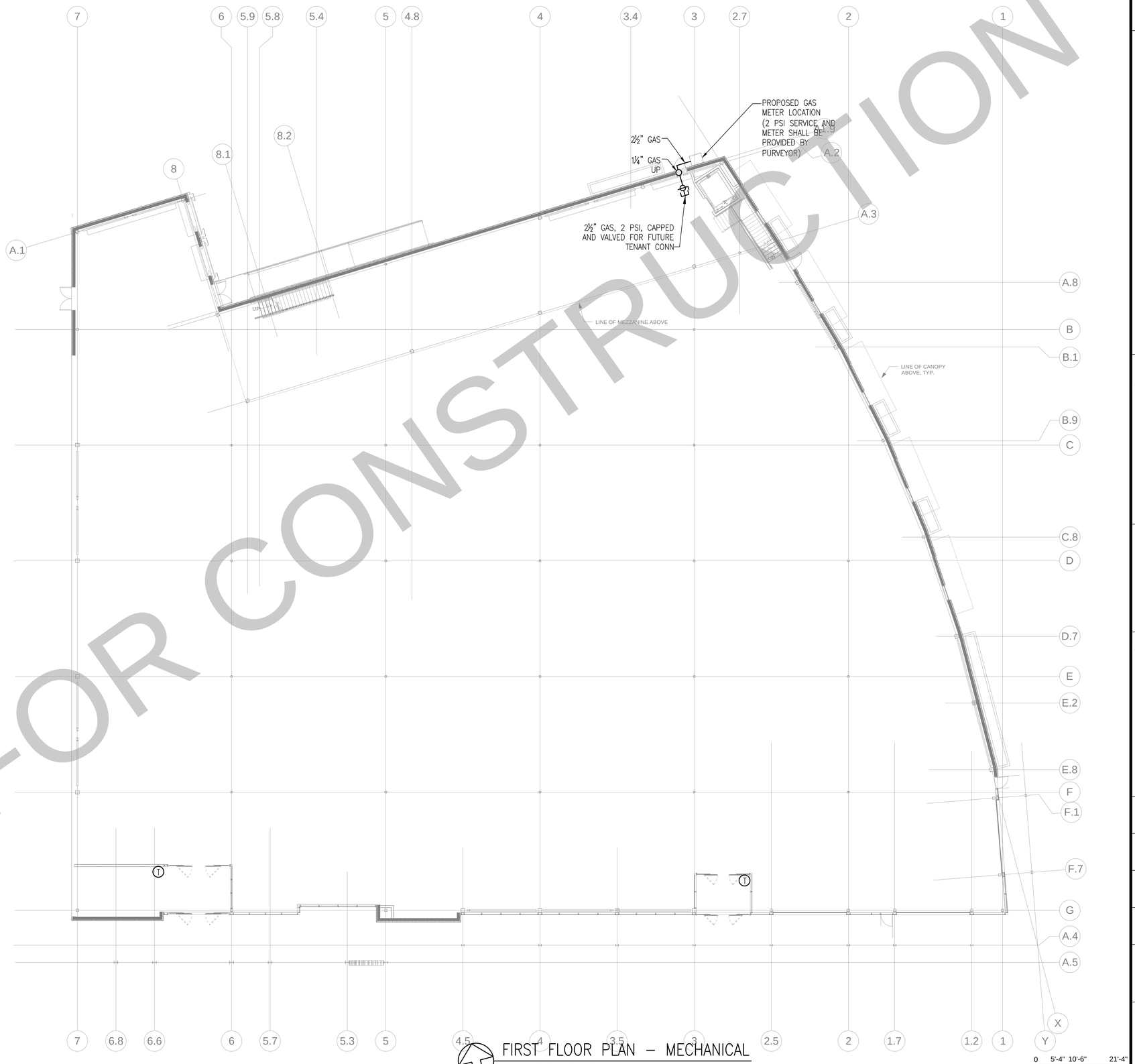

FIRST FLOOR PLAN – MECHANICAL

SCALE: 3/32" = 1' – 0"

NOT FOR CONSTRUCTION

COPYRIGHT NOTICE

THIS LAYOUT/DESIGN IS AN UNPUBLISHED WORK, AND MERIT MECHANICAL HEREBY RESERVES ITS COMMON LAW RIGHT, PURSUANT TO TITLE 17 SECTION 2 OF THE USA CODE TO PREVENT UNAUTHORIZED COPYING, PUBLICATION OR USE OF THIS DESIGN, AND TO OBTAIN DAMAGES THEREFORE.

THE VILLAGE AT TOTEM LAKE
BUILDING A - LOWER MALL

KIRKLAND, WASHINGTON 98034

COMFORT SYSTEMS USA
Merit Mechanical
9630 153RD AVENUE NE
REDMOND, WA 98052
(425) 883-9224
WA LICENSE: MERITM163CM
WWW.MERITMECHANICAL.COM

REVISIONS
0. FOR REVIEW MAY 16, 2016

DESIGNED
DJH

CHECKED
MTS

DATE
1-6-2016

JOB NUMBER
115062

SHEET TITLE
FIRST FLOOR PLAN - MECH

SHEET NUMBER
M2101A

SHEET 4 OF 7

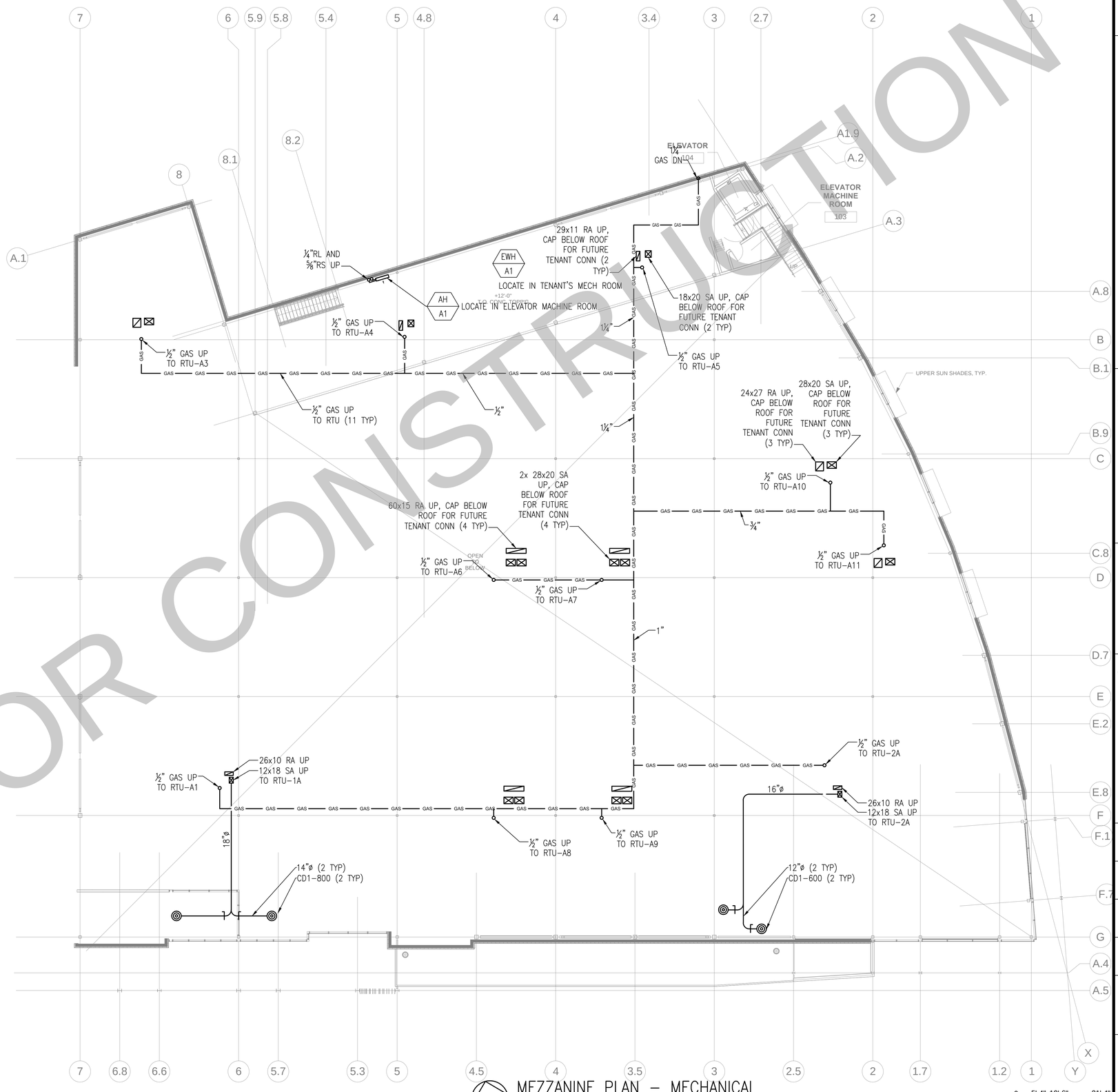

MEZZANINE PLAN – MECHANICAL

SCALE: 3/32" = 1' – 0"

0 5'-4" 10'-6" 21'-4"

SCALE: 3/32" = 1'-0"

NOT FOR CONSTRUCTION

COPYRIGHT NOTICE

THIS LAYOUT/DESIGN IS AN UNPUBLISHED WORK, AND MERIT MECHANICAL HEREBY RESERVES ITS COMMON LAW RIGHT, PURSUANT TO TITLE 17 SECTION 2 OF THE USA CODE TO PREVENT UNAUTHORIZED COPYING, PUBLICATION OR USE OF THIS DESIGN, AND TO OBTAIN DAMAGES THEREFORE.

THE VILLAGE AT TOTEM LAKE
BUILDING A - LOWER MALL

KIRKLAND, WASHINGTON 98034

COMFORT SYSTEMS USA
Merit Mechanical
9630 153RD AVENUE NE
REDMOND, WA 98052
(425) 883-9224
WA LICENSE: MERITM163CM
WWW.MERITMECHANICAL.COM

REVISIONS
0. FOR REVIEW MAY 16, 2016

DESIGNED
DJH

CHECKED
MTS

DATE
1-6-2016

JOB NUMBER
115062

SHEET TITLE
MEZZANINE PLAN - MECH

SHEET NUMBER
M2102A

SHEET 5 OF 7

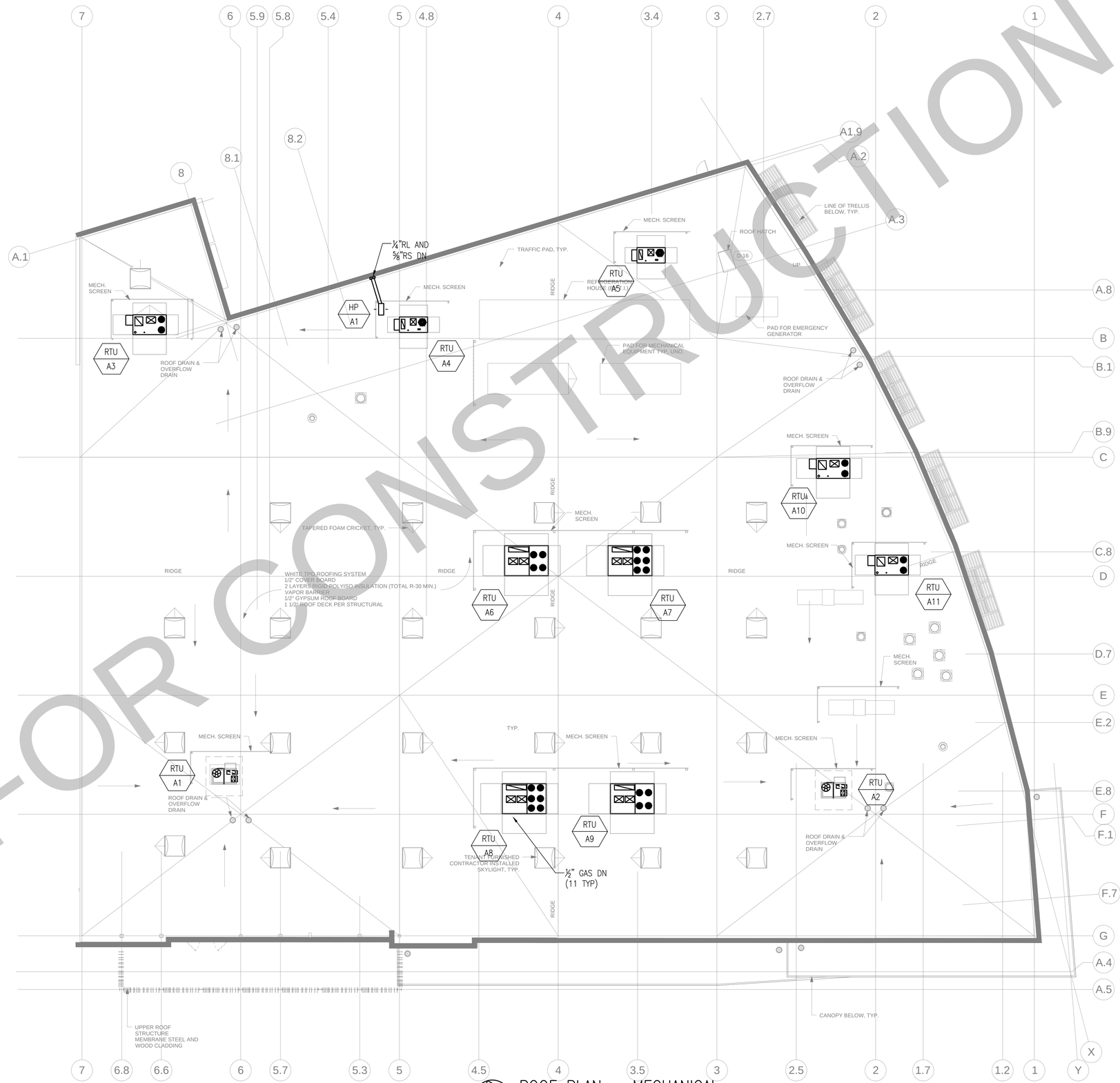

ROOF PLAN – MECHANICAL

SCALE: 3/32" = 1' – 0"

0 5'-4" 10'-6" 21'-4"
SCALE: 3/32" = 1'-0"

NOT FOR CONSTRUCTION

COPYRIGHT NOTICE

THIS LAYOUT/DESIGN IS AN UNPUBLISHED WORK, AND MERIT MECHANICAL HEREBY RESERVES ITS COMMON LAW RIGHT, PURSUANT TO TITLE 17 SECTION 2 OF THE USA CODE TO PREVENT UNAUTHORIZED COPYING, PUBLICATION OR USE OF THIS DESIGN, AND TO OBTAIN DAMAGES THEREFORE.

THE VILLAGE AT TOTEM LAKE
BUILDING A - LOWER MALL

KIRKLAND, WASHINGTON 98034

COMFORT SYSTEMS USA
Merit Mechanical
9630 153RD AVENUE NE
REDMOND, WA 98052
(425) 883-9224
WA LICENSE: MERITM163CM
WWW.MERITMECHANICAL.COM

REVISIONS
0. FOR REVIEW MAY 16, 2016

DESIGNED
DJH

CHECKED
MTS

DATE
1-6-2016

JOB NUMBER
115062

SHEET TITLE
ROOF PLAN - MECHANICAL

SHEET NUMBER
M2801A

SHEET 6 OF 7

SYMBOLS & ABBREVIATIONS

POWER SYMBOLS

- SINGLE RECEPT.
- DUPLEX RECEPT.
- SWITCHED DUPLEX RECEPT.
- DEDICATED DUPLEX RECEPT.
- ABOVE COUNTER RECEPT.
- GFI RECEPT.
- ABOVE COUNTER GFI RECEPT.
- FOURPLEX RECEPT.
- DEDICATED FOURPLEX RECEPT.
- 240 VOLT RECEPT.
- FLUSH FLOOR RECEPT. (DUPLEX SHOWN)
- FLUSH CEILING MOUNT RECEPT.
- RECEPT ON DROP CORD (DUPLEX SHOWN)
- RECEPT ON CORD REEL (DUPLEX SHOWN)
- EQUIPMENT PLUG
- MULTIOUTLET ASSEMBLY (TYPE DENOTED)
- MULTIOUTLET ASSEMBLY (TYPE DENOTED)
- CLOCK (TYPE DENOTED)
- POWER POLE (OPEN OFFICE STYLE)
- SURGERY SERVICE COLUMN
- GROUND ROD (PLAN VIEW)
- GROUND CONNECTION TO STEEL OR STRUCTURE
- GROUND CONNECTION - EXOTHERMIC WELD
- UTILITY SERVICE POWER POLE (SITE)
- SPECIAL RECEPT. OR CONN. (SEE SCHEDULE)
- SPECIAL CONNECTION (SEE SCHEDULE)
- JUNCTION BOX
- PULL BOX
- CIRCUIT BREAKER PANEL
- POWER OR DISTRIBUTION PANEL
- SPECIAL CABINET (TYPE DENOTED)
- TRANSFORMER (TYPE DENOTED)
- MOTOR (SEE SCHEDULE)
- MAG. MOTOR STARTER OR CONTACTOR
- COMB. MOTOR STARTER (NON-FUSED)
- COMB. MOTOR STARTER (FUSED)
- SAFETY DISC. SW. (NON-FUSED)
- SAFETY DISC. SW. (FUSED)
- BUS DUCT WITH PLUG UN DISCONNECT (FUSED)
- VARIABLE FREQUENCY DRIVE
- RELAY
- ENCLOSED CIRCUIT BREAKER
- HUMIDISTAT
- THERMOSTAT
- WALL HEATER (TYPE DENOTED)
- HAND OR HAIR DRYER (TYPE DENOTED)
- DASHED SYMBOL INDICATES EXISTING
- HATCHED SYMBOL INDICATES REMOVED
- MOMENTARY CONTACT SWITCH
- TIMER SWITCH
- TIME DELAY SWITCH
- FAN SPEED CONTROL
- MOTOR HP. RATED SWITCH
- PUSH BUTTON
- MULTIPLE SERVICE OUTLET
- OUTLET IN FLOOR (MICROPHONE SHOWN)
- MULTIPLE SERVICE FLR OUTLET

LIGHTING SYMBOLS

- SURFACE LIGHT
- WALL MOUNTED FLOODLIGHT
- RECESSED LIGHT
- POLE MOUNTED LIGHT
- POLE MOUNTED FLOODLIGHT
- SURFACE LINEAR LIGHT
- SUSPENDED OR PENDANT LIGHT
- RECESSED LINEAR LIGHT
- STRIP LIGHT
- TRACK AND TRACK LIGHT
- EMERGENCY BATTERY LIGHT
- EXIT SIGN
- LIGHT FIXTURE ON (EM) LIFE SAFETY BRANCH
- LIGHT FIXTURE ON (EM) CRITICAL BRANCH
- LIGHT FIXTURE ON EMERGENCY CIRCUIT
- LIGHT FIXTURE WITH EMERGENCY BALLAST
- SINGLE POLE SW.
- 2 POLE SINGLE THROW SW.
- 3-WAY SW.
- 4-WAY SW.
- KEYED SW.
- DIMMER SWITCH
- OCCUPANCY SENSOR SWITCH
- OCCUPANCY SENSOR - TYPE DENOTED
- LIGHT LEVEL SENSOR - TYPE DENOTED
- TIME CONTROL SWITCH (TIME SWITCH)
- PHOTOCELL

ALL DISTANCES ARE TO CENTER OF DEVICE OR EQUIPMENT UNLESS OTHERWISE NOTED.
DEVICES INDICATED AT 48" MAY NOT BE INSTALLED WITH ANY OPERABLE PART HIGHER THAN 48".
DEVICES MAY BE INSTALLED IN CONCRETE MASONRY UNITS WITH THE TOP OF THE DEVICE AT 48".

SIGNALS & COMMUNICATION SYMBOLS

- TELEPHONE OUTLET
- WALL TELEPHONE OUTLET
- INFORMATION OUTLET
- INTERCOM OUTLET LOCATION
- TELEVISION OUTLET
- WIRELESS ACCESS POINT
- SPEAKER (WALL OR CEILING MT.)
- HORN TYPE SPEAKER
- VOLUME CONTROL
- MICROPHONE OUTLET
- PROJECTOR CONTROL OUTLET
- KEYED NOTE (SEE SCHEDULE)
- FIRE ALARM HORN
- FIRE ALARM HORN W/STROBE (CANDELAS)
- FIRE ALARM BELL
- FIRE ALARM BELL W/STROBE (CANDELAS)
- FIRE ALARM CHIME
- FIRE ALARM CHIME W/STROBE (CANDELAS)
- FIRE ALARM STROBE (CANDELAS)
- FIRE ALARM SPEAKER W/STROBE (CANDELAS)
- FIRE ALARM REMOTE ANNUNCIATOR
- SMOKE DETECTOR (TYPE DENOTED)
- HEAT DETECTOR (TYPE & TEMP DENOTED)
- F.A. PULLSTATION (TYPE DENOTED)
- F.A. ZONE ADDRESSABLE MODULE
- F.A. INDIVIDUAL ADDRESSABLE MODULE
- F.A. DOOR HOLDER
- F.A. DOOR CLOSER
- FIRE ALARM SHUT DOWN RELAY
- ELECTRIC STRIKE
- MAGNETIC LOCK
- DOOR CONTACTS
- CARD READER
- KEYPAD
- MOTION DETECTOR (TYPE DENOTED)
- CCTV CAMERA
- CCTV CAMERA WITH PAN/TILT DRIVE

CIRCUITRY SYMBOLS

- CONDUIT CONCEALED IN WALL OR OVERHEAD
- CONDUIT CONCEALED BELOW FLOOR
- CONDUIT EXPOSED
- SURFACE RACEWAY
- CONDUIT TRANSITION UP
- CONDUIT TRANSITION DOWN
- CONDUIT STUBBED OUT
- LOW VOLTAGE POWER WIRING
- EXISTING CONDUIT
- UNDERGROUND ELECTRICAL
- UNDERGROUND HIGH VOLTAGE ELECTRICAL
- UNDERGROUND TELEPHONE
- UNDERGROUND COMMUNICATIONS
- UNDERGROUND CABLE TELEVISION
- UNDERGROUND FIBER OPTIC
- OVERHEAD ELECTRIC
- OVERHEAD TELEPHONE
- BRANCH CIRCUIT HOME RUN
- FLEXIBLE CONDUIT OR FIXTURE WHIP
- UNDERFLOOR RACEWAY SYSTEM
- CABLE TRAY
- CONDUIT SLEEVE

MISCELLANEOUS SYMBOLS

- FLAG NOTE
- KEYNOTE
- CENTERLINE
- ELEVATION MARKER
- X - INDICATES DETAIL NUMBER
  X.XX - INDICATES SHEET WHERE DETAIL IS FOUND
  - DIRECTION OF ARROW INDICATES PLAN ORIENTATION IN RELATION TO DETAIL
- XX-X EQUIPMENT IDENTIFIER
- KEY NOTES:

* DISTANCE ABOVE TOP OF DOOR FRAME
** DISTANCE TO TOP OF EQUIPMENT OR DEVICE
*** DISTANCE TO HIGHEST OPERABLE PART OF EQUIPMENT
**** DISTANCE BELOW CEILING
***** DISTANCE TO BOTTOM OF DEVICE

ABBREVIATIONS

A, AMP	AMPERE
AC	INDICATES ABOVE COUNTER MOUNTING AT +4" ABOVE BACKSPLASH OR +6" ABOVE COUNTERS WITHOUT BACKSPLASH.
AFF	ABOVE FINISHED FLOOR
ATS	AUTOMATIC TRANSFER SWITCH
AWG	AMERICAN WIRE GAGE
BTS	BASE TRANSFER STATION
CB	CIRCUIT BREAKER
CKT	CIRCUIT
DED	DEDICATED
DW	DISHWASHER
E	EXISTING
EPO	EMERGENCY POWER OFF
EWC	ELECTRIC WATER COOLER
FA	FIRE ALARM
FBIOC	FURNISHED BY OTHERS INSTALLED BY CONTRACTOR
FI	FILM ILLUMINATOR
G, GND	GROUND
GD	GARBAGE DISPOSAL
GFI, GFCI	GROUND FAULT CIRCUIT INTERRUPTER
HT	HEIGHT
HWT	HOT WATER TANK
IGN	IGNITION
J-BOX	JUNCTION BOX
MW	MICROWAVE - COORDINATE MOUNTING HEIGHT
N	NEUTRAL
NC	NURSE CALL
P	POLE
PH	PHASE
PNL	PANEL
PROVIDE	FURNISH AND INSTALL
R	RELOCATED (INDICATES EXISTING EQUIPMENT TO BE RE-INSTALLED AS SHOWN)
REC	RECEPTACLE
REFER	REFRIGERATOR
RO	RACEWAY ONLY
S	SAFETY TYPE
TELCO	TELEPHONE COMPANY
TELE	TELEPHONE
TR	TELEPHONE RISER
TYP	TYPICAL
UC	UNDERCABINET
V	VOLT
W	WIRE OR WATT
W/O	WITHOUT
WP	WEATHERPROOF

NOTES REGARDING DRAWINGS:

THESE DRAWINGS ARE PROVIDED FOR YOUR USE RELATING EXCLUSIVELY TO THE PROJECT CONTAINED HEREIN. SEA-TAC ELECTRIC, INC. PROVIDES THESE DRAWINGS WITH THE FOLLOWING STIPULATIONS:

1. THIS DOCUMENT, AND THE IDEAS AND DESIGNS INCORPORATED HEREIN, AS AN INSTRUMENT OF PROFESSIONAL SERVICE, IS THE PROPERTY OF SEA-TAC ELECTRIC, INC. AND IS NOT TO BE USED, IN WHOLE OR IN PART, FOR ANY OTHER PROJECT WITHOUT THE WRITTEN CONSENT OF SEA-TAC ELECTRIC, INC. THE DESIGNS CONTAINED HEREIN ARE PROTECTED BY THE RULES AND REGULATIONS OF U.S. COPYRIGHT LAWS.
2. THESE DRAWINGS AND DOCUMENTS WERE COPIED FROM COMPUTER DATA CREATED AS A STEP IN THE PRODUCTION OF PHYSICAL DATA FOR THIS PROJECT. THERE MAY BE DISCREPANCIES BETWEEN THESE DOCUMENTS AND THE COMPUTER DATA. WHERE SUCH DISCREPANCIES EXIST, ONLY THE PHYSIAL DOCUMENTS AND DRAWINGS CAN BE RELIED ON TO REFLECT THE WORK OF SEA-TAC ELECTRIC, INC., WHO MAKES NO GUARANTEES OR WARRANTIES REGARDING THESE DOCUMENTS OR THE DATA THEREIN.
3. IN ACCEPTING THESE DOCUMENTS, YOU ASSUME ALL LIABILITY FOR THE ACCUARCY, UTILITY, OR SUITABILITY FOR ANY PRUPOSE FOR ANY DATA THESE DRAWINGS CONTAIN.

COPYRIGHT 2016

GENERAL NOTES:

NOTE:"CONTRACTOR" MEANS "ELECTRICAL CONTRACTOR" WHEN REFERENCED ANYWHERE IN THE ELECTRICAL CONSTRUCTION DOCUMENTS UNLESS WORK AND EQUIPMENT HAS BEEN COORDINATED BETWEEN THE ELECTRICAL AND GENERAL CONTRACTORS TO BE PROVIDED BY THE GENERAL CONTRACTOR. "NEEDED", "PROVIIDE", AND "INSTALL" MEANS ALL ITEMS CALLED OUT IN THE CONTRACT DOCUMENTS AND ANY ADDITIONAL ITEMS NOT CALLED OUT BUT REQUIRED TO MAKE A COMPLETE AND OPERATIONAL SYSTEM.

SCOPE:
THE INTENT OF THE DRAWINGS IS TO PROVIDE A COMPLETE AND FULLY OPERATIONAL ELECTRICAL SYSTEM. THE ELECTRICAL CONTRACTOR SHALL FURNISH AND INSTALL ALL LABOR, MATERIAL AND EQUIPMENT NECESSARY TO COMPLETE THE ELECTRICAL WORK.

PERMITS AND FEES:
THE ELECTRICAL CONTRACTOR SHALL PROCURE AND PAY FOR ALL PERMITS, FEES AND INSPECTIONS NECESSARY TO COMPLETE THE ELECTRICAL SCOPE OF WORK PRIOR TO STARTING THE WORK.

WARRANTY:
THE ELECTRICAL CONTRACTOR SHALL UNCONDITIONALLY WARRANTY ALL WORK TO BE FREE OF DEFECTS IN MATERIAL AND WORKMANSHIP FOR A PERIOD OF ONE (1) YEAR FROM THE DATE OF FINAL ACCEPTANCE BY THE OWNER OR OWNER'S REPRESENTATIVE AND WILL REPAIR OR REPLACE ANY DEFECTIVE WORK PROMPTLY AND WITHOUT CHARGE AND RESTORE ANY OTHER EXISTING WORK DAMAGED IN THE COURSE OF REPAIRING DEFECTIVE MATERIALS AND WORKMANSHIP.

CODES:
PERFORM ALL WORK IN ACCORDANCE WITH THE CURRENT NATIONAL ELECTRICAL CODE, STATES, CITY ELECTRICAL CODES, AND ALL OTHER APPLICABLE CODES INCLUDING ANY STATE OR LOCAL ENERGY CODES. ALL WORK SHALL ALSO BE IN COMPLIANCE WITH BUILDING OWNER'S CRITERIA. IN CASE OF CONFLICT BETWEEN THE DRAWINGS, SPECIFICATIONS, CODES, ORDINANCES, AND AUTHORITIES HAVING JURISDICTION, THE MOST STRINGENT STANDARD (IN THE OPINION OF THE ENGINEER) SHALL APPLY.

STANDARDS:
EQUIPMENT AND MATERIALS SHALL CONFORM WITH APPROPRIATE PROVISIONS OF NEC, WAC, ASTM, UL, ETL, NEMA, ANSI, AND OTHER APPLICABLE AGENCY AS THEY APPLY TO EACH INDIVIDUAL UNIT OR ASSEMBLY.

COPYRIGHT 2016

DRAWING INDEX

E0.01	SYMBOLS AND ABBREVIATIONS
E0.02	ELECTRICAL SCHEDULES
E0.03	ELECTRICAL SCHEDULES
E1.01	ELECTRICAL SITE PLAN
E2.01	LEVEL 1 POWER PLAN
E2.02	MEZZANINE POWER PLAN
E2.03	MAIN ROOF POWER PLAN
E3.01	LEVEL 1 LIGHTING PLAN
E3.02	MEZZANINE LIGHTING PLAN
E4.01	LEVEL 1 MECHANICAL POWER PLAN
E4.02	MEZZANINE MECHANICAL POWER PLAN
E4.03	MAIN ROOF MECHANICAL POWER PLAN
E5.01	ONE-LINE RISER DIAGRAM
E5.02	PANEL SCHEDULES
E6.01	ELECTRICAL DETAILS

60% CD SET

SEA-TAC ELECTRIC INC.
7056 SOUTH 220TH STREET
KENT, WA 98032
PHONE (253) 872-6553
FAX (253) 872-4112
www.seataclectric.com

THE VILLAGE AT TOTEM LAKE - BLDG A
KIRKLAND, WA 98034

No.	Description	Date

CENTERCAL PROPERTIES, LLC
1600 EAST FRANKLIN
EL SEGUNDO, CA 90245

SYMBOLS AND ABBREVIATIONS

PROJECT NUMBER	15115
DATE	04/27/2016
DRAWN BY	CM, IE, NP
CHECKED BY	CM

E0.01

SCALE 12" = 1'-0"

C:\Users\iane\Documents\Totem Lake_Elec_Bldg_A_IanEdmunds.rvt

5/16/2016 3:34:59 PM

VILLAGE AT TOTEM LAKE (BUILDING A) - SERVICE LOAD CALCULATION

SERVICE VOLTAGE ===> 480V 3Ph

BASELINE

SQUARE FOOTAGES	PER FLOOR	# OF...	TOTAL
A-100 - RETAIL MAIN FLOOR	35000 SQ.FT	1	35000 SQ.FT
A-100 - RETAIL MEZZANINE	5000 SQ.FT	1	5000 SQ.FT
		RETAIL TOTAL SQUARE FOOTAGE===>	40,000 SQ.FT

TENANT GENERAL POWER/LIGHTING

SQUARE FOOTAGE ALLOWANCES			TOTAL	
TENANT GENERAL POWER	2	W/sq ft x tenant total sq ft =	80.00	kva
TENANT COMPUTER POWER	2	W/sq ft x tenant total sq ft =	80.00	kva
TENANT LIGHTING	1.68	W/sq ft x tenant total sq ft =	67.20	kva
		TOTAL TENANT GENERAL POWER/LIGHTING LOADS===>	227.20	kva
		=	5.68	w/sq ft

MISCELLANEOUS HOUSE/EQUIPMENT LOADS

EQUIPMENT ALLOWANCES				HP	EQUIP	EQUIP	A		NEC	NEC		
DESCRIPTION	**HP**	**V**	**PH**	**KW**	**KW**	**AMPS**	**KW**	**QTY**	**DEMAND**	**REFERENCE**	**TOTAL**	
SITE LIGHTING		277-	1-		30			1	100%		30.00	KVA
PASSENGER ELEVATOR	20-	480-	3-	21.40				1	125%	NEC 620-14	26.75	KVA
GARBAGE COMPACTOR	10-	480-	3-	11.10				1	100%		11.10	KVA
RECEYICLE COMPACTOR	3-	480-	3-	3.82				1	100%		3.82	KVA
SPRINKLER HEAT		208-	1-		1.5			1	100%		1.50	KVA
										TOTAL MISCELLANEOUS HOUSE/EQUIPMENT LOADS===>	73.17	KVA

MISCELLANEOUS GROCERY/REFRIGERATION EQUIPMENT LOADS

EQUIPMENT ALLOWANCES				HP	EQUIP	EQUIP	A		NEC	NEC		
DESCRIPTION	**HP**	**V**	**PH**	**KW**	**KW**	**AMPS**	**KW**	**QTY**	**DEMAND**	**REFERENCE**	**TOTAL**	
GROCERY/REFRIGERATION EQUIPMENT		480-	3-			1000	831.38...	1	125%		1039.23	KVA
										TOTAL MISCELLANEOUS GROCERY/REFRIGERATION EQUIPMENT LOADS===>	1039.23	KVA

MECHANICAL/PLUMBING EQUIPMENT LOADS

EQUIPMENT ALLOWANCES					HP	EQUIP	EQUIP	A		NEC	NEC		
DESCRIPTION		**HP**	**V**	**PH**	**KW**	**KW**	**AMPS**	**KW**	**QTY**	**DEMAND**	**REFERENCE**	**TOTAL**	
ELECTRIC WALL HEATER													
EWH-1			208-	1-			8.32	1.73056	1	100%		1.73	KVA
HEAT PUMP													
AH-A1	POWERED FROM OUTDOOR								1	100%			KVA
HP-A1			208-	1-			16	3.328	1	100%		3.33	KVA
PACKAGED ROOFTOP UNIT													
RTU-A1			480-	3-			13	10.807...	1	100%		10.81	KVA
RTU-A2			480-	3-			11	9.1452...	1	100%		9.15	KVA
RTU-A100A			480-	3-			40	33.255...	1	125%		41.57	KVA
RTU-A100B			480-	3-			40	33.255...	1	100%		33.26	KVA
RTU-A100C			480-	3-			40	33.255...	1	100%		33.26	KVA
RTU-A100D			480-	3-			40	33.255...	1	100%		33.26	KVA
RTU-A100E			480-	3-			40	33.255...	1	100%		33.26	KVA
											TOTAL MECHANICAL/PLUMBING EQUIPMENT LOADS===>	199.60	KVA

TOTAL LOAD SUMMARY

	BUILDING...	
TOTAL TENANT GENERAL POWER/LIGHTING LOADS===>	227.20	KVA
TOTAL MISCELLANEOUS HOUSE/EQUIPMENT LOADS===>	73.17	KVA
TOTAL MISCELLANEOUS GROCERY/REFRIGERATION EQUIPMENT LOADS===>	1039.23	KVA
TOTAL MECHANICAL/PLUMBING EQUIPMENT LOADS===>	199.60	KVA
TOTAL===>	1539.20	KVA
=	1851.37	A @ 480V

VILLAGE AT TOTEM LAKE - BUILDING "A" - MECHANICAL EQUIPMENT CONNECTION SCHEDULE

ELECTRICAL DATA						INDIVIDUAL EQUIPMENT INFORMATION						MANUFACTURER UNIT INFO		DISCONNECT						
											TOTAL			TYPE		FRAME	FUSE	SUPPLIED BY		ELECT
MARK		AREA SERVED	LOCATION	VOLT	PH	QTY	kva	FLA	HP	FLA	KVA	MCA	MOCP	F/NF	NEMA	SIZE	AMP	ELECT	MECH	NOTES
ELECTRIC WALL HEATER SCHEDULE																				
EWH	A1	MECHANICAL ROOM	MECHANICAL ROOM	208	1	1	1.73	8.32			1.73	8.32	15	F	1	20	15	X		2
HEAT PUMP SCHEDULE (NON-DUCTED)																				
AH	A1		WALL	208	1	1														2,3
HP	A1		ROOF	208	1	1	3.328	16.00			3.33	16	25	F	3R	25	20	X		2,3
PACKAGED ROOFTOP UNIT SCHEDULE																				
RTU	A1		ROOF	480	3	1	10.810	13.00			10.81	13	15	F	3R	20	15	X		2,5
RTU	A2		ROOF	480	3	1	9.145	11.00			9.15	11	15	F	3R	20	15	X		2,5
RTU	A100A		ROOF	480	3	1	33.255	40.00			33.26	40	50	F	3R	50	40	X		2,4,5
RTU	A100B		ROOF	480	3	1	33.255	40.00			33.26	40	50	F	3R	50	40	X		2,4,5
RTU	A100C		ROOF	480	3	1	33.255	40.00			33.26	40	50	F	3R	50	40	X		2,4,5
RTU	A100D		ROOF	480	3	1	33.255	40.00			33.26	40	50	F	3R	50	40	X		2,4,5
RTU	A100E		ROOF	480	3	1	33.255	40.00			33.26	40	50	F	3R	50	40	X		2,4,5

ELECTRICAL NOTES:

1. FOR 120V FANS PROVIDE MOTOR RATED SWITCH FOR LOCAL DISCONNECT WHERE REQUIRED
2. PROVIDE HACR RATED BREAKER AT SERVING PANEL OR FUSED LOCAL DISCONNECT AT EQUIPMENT
3. SINGLE POINT ELECTRICAL CONNECTION; INDOOR UNIT IS POWERED FROM OUTDOOR UNIT.
4. SMOKE DETECTOR PROVIDED BY M.C. INSTALLED BY E.C.
5. PROVIDE 120V, 15A CONNECTION FOR MOTORIZED DAMPER AT BUILDING PENETRATION LOCATIONS.

60% CD SET

SEANTAC ELECTRIC INC.
7056 SOUTH 220TH STREET
KENT, WA 98032
PHONE (253) 872-6553
FAX (253) 872-4112
www.seatacelectric.com

THE VILLAGE AT TOTEM LAKE - BLDG A
KIRKLAND, WA 98034

No.	Description	Date

CENTERCAL PROPERTIES, LLC
1600 EAST FRANKLIN
EL SEGUNDO, CA 90245

ELECTRICAL SCHEDULES

PROJECT NUMBER	15115
DATE	04/27/2016
DRAWN BY	CM, IE, NP
CHECKED BY	CM

E0.02

SCALE

C:\Users\ianel\Documents\Totem Lake_Elec_Bldg_A_IanEdmunds.rvt

5/16/2016 3:34:59 PM

VILLAGE AT TOTEM LAKE - LIGHT FIXTURE SCHEDULE

TYPE	MANUFACTURER	SERIES NO. (CATALOG NO.)	VOLT	... NO.	TYPE	BALLAST	FIXTURE WATTS	DESCRIPTION
	INTERIOR LIGHTING							
F-11	TO BE DETERMINED *OR APPROVED EQUAL*	TO BE DETERMINED *OR APPROVED EQUAL*	277	2	F32T8	ELECTRONIC <10%THD	58	SURFACE MOUNTED FLUORESCENT STRIP FIXTURE. 48" NOMINAL LENGTH, LOW PROFILE STEEL HOUSING WITH HIGH REFLECTANCE BAKED WHITE ENAMEL FINISH. PROVIDE WITH CHAIN HANGER AND WIREGUARD UNLESS SPECIFIED OTHERWISE.
X-01	LITHONIA *OR APPROVED EQUAL*	EXGLEDELMD *OR APPROVED EQUAL*	277	1	5W LED	LED DRIVER	5	UNIVERSAL MOUNT LED EXIT SIGN WITH GREEN LETTERS, FACES AND ARROW INDICATORS AS SHOWN ON PLANS. WHITE POLYCARBONATE HOUSING WITH STENCIL FACE. 20-YEAR LED LIFE. INTEGRAL 2-CIRCUIT TRANSFER RELAY & NICAD BATTERY FOR EMERGENCY OPERATION.
	SITE LIGHTING							
F-1	LUMINII *OR APPROVED EQUAL*	KENDO M WET-2900K-MO-S-F-F-SA *OR APPROVED EQUAL*	277	1	3.2W/LF LED	LED DRIVER	3.2W/LF	LED UPLIGHT AT BUILDING CANOPY. UL LISTED FOR WET LOCATION. ELECTRICAL CONTRACTOR TO COORDINATE ALL PARTS AND ACCESSORIES FOR A FULLY OPERABLE LIGHTING SYSTEM.
F-2	SPJ *OR APPROVED EQUAL*	SPJ-CK-LED-BRONZE-VERIFY (FINISH W/ ARCHITECT)-WIDE FLOOD-3000K-1000-277V *OR APPROVED EQUAL*	277	2	17W LED	LED DRIVER	34	WALL MOUNTED LED UP/DOWN ACCENT LIGHT
F-3	LIMIERE *OR APPROVED EQUAL*	CAMBRIA SERIES 203-CRS-50MR16-12-(VERIFY)-LVR (HEX CELL LOUVER) *OR APPROVED EQUAL*	12	1	10W LED	LED DRIVER	50	BUILDING MOUNTED ADJUSTABLE DOWLIGHT CONCEALED BEHIND CANOPY. ELECTRICAL CONTRACTOR TO PROVIDE 10W SORAA OUTDOOR LED MR16 41 DEGREE, 2700K. 12V TRANSFORMER REQUIRED FOR OPERATION. UL LISTED FOR WET LOCATION.
F-4	SPECTRUM LIGHTING *OR APPROVED EQUAL*	SGE6LEDGV-26W-30K-E2-(COORDINATE)-AR622GV-SO-277 *OR APPROVED EQUAL*	277	1	26W LED	LED DRIVER	28.6	RECESSED LED DOWNLIGHT AT EXTERIOR CANOPY LOCATIONS. UL LISTED FOR WET LOCATION.
F-5	LUMINII *OR APPROVED EQUAL*	KENDO M WET-2900K-MO-S-F-F-SA *OR APPROVED EQUAL*	277	1	3.2W/LF LED	LED DRIVER	3.2W/LF	LED UNDERBENCH LIGHT. UL LISTED FOR WET LOCATION. ELECTRICAL CONTRACTOR TO COORDINATE ALL PARTS AND ACCESSORIES FOR A FULLY OPERABLE LIGHTING SYSTEM.
F-6	VISION 3 *OR APPROVED EQUAL*	FL12B-BL (VERIFY)-C4-K11-127(51 DEG)-L1-H1-120V *OR APPROVED EQUAL*	120	1	17W	INTEGRAL LED DRIVER	17	STAKE MOUNTED UPLIGHT AT TREES. 3000K, WARM WHITE LED, 17W, 51 DEGREE LED LAMP. UL LISTED FOR WET LOCATION.
F-7	AURORALIGHT *OR APPROVED EQUAL*	TITAN SERIES LSL3-8R-W-WW (2900K)-T/S-DH-BLP *OR APPROVED EQUAL*	12	1	7.5W LED	LED DRIVER	7.5	TREE MOUNTED MOONLIGHTS. SOME LOCATIONS ARE DEPICTED AS HAVING (2) HEADS, THIS IS TO LIMIT THE AMOUNT OF CABLE RUNNING UP TREE. IN THOSE LOCATIONS A TEE CONNECTOR IS REQUIRED. 12V TRANSFORMER REQUIRED FOR OPERATION. UL LISTED FOR WET LOCATION.
F-8	AURORALIGHT *OR APPROVED EQUAL*	CANDELA SERIES *OR APPROVED EQUAL*	12	1	2.5W LED	INTEGRAL LED DRIVER	2.5	CABLE MOUNTED LED STRING LIGHTS. VERIFY FINISH WITH ARCHITECT PRIOR TO ANY PROCUREMENT. APPROXIMATE 3'-0" OC SPACING. ELECTRICAL CONTRACTOR TO COORDINATE MOUNTING DETAIL WITH CABLE. 12V TRANSFORMER REQUIRED FOR OPERATION. UL LISTED FOR WET LOCATION.
F-9	KIM LIGHTING *OR APPROVED EQUAL*	EL218FS/BL3KUV-FH215DB-(VERIFY)-DIM-277-BL-EPT *OR APPROVED EQUAL*	277	1	16W LED	LED DRIVER	16	LED FLOODLIGHT AT SPECIMEN TREES. ELECTRICAL CONTRACTOR TO COORDINATE APPROPRIATE STAKE MOUNTING OPTIONS AS REQUIRED. 3000K WARM WHITE LED, 1300 LUMENS. UL LISTED FOR WET LOCATIONS.
F-10	TO BE DETERMINED *OR APPROVED EQUAL*	TO BE DETERMINED *OR APPROVED EQUAL*	120	1	100W		100	LARGE CUSTOM LANTERNS. MAXIMUM COST ALLOWANCE OF $1200 PER FIXTURE. UL LISTED FOR WET LOCATION.
DF-1	TO BE DETERMINED *OR APPROVED EQUAL*	TO BE DETERMINED *OR APPROVED EQUAL*						3'-0" DECORATIVE EXTERIOR PENDANT AT BUILDING "A" - WHOLE FOODS. MAXIMUM ALLOWANCE OF $2500 FOR FIXTURES. UL LISTED FOR WET LOCATIONS.
DF-2	TO BE DETERMINED *OR APPROVED EQUAL*	TO BE DETERMINED *OR APPROVED EQUAL*						DECORATIVE EXTERIOR SCONCE. MAXIMUM ALLOWANCE OF $2500 FOR FIXTURES. UL LISTED FOR WET LOCATIONS.
DF-3	TO BE DETERMINED *OR APPROVED EQUAL*	TO BE DETERMINED *OR APPROVED EQUAL*						DECORATIVE EXTERIOR SCONCE. MAXIMUM ALLOWANCE OF $2500 FOR FIXTURES. UL LISTED FOR WET LOCATIONS.
PF-1	MCGRAW EDISON *OR APPROVED EQUAL*	GALLEON LED SERIES GLEON-AE-03-LED-E1-SL2-(VERIFY)-30FT SQUARE POLE *OR APPROVED EQUAL*	277	1	105W LED	LED DRIVER	105	30'-0", TYPE 2, LED PARKING FIELD POSTLIGHT.
PF-1A	MCGRAW EDISON *OR APPROVED EQUAL*	GALLEON LED SERIES GLEON-AE-03-LED-E1-SL3-(VERIFY)-30FT SQUARE POLE *OR APPROVED EQUAL*	277	1	105W LED	LED DRIVER	105	30'-0", TYPE 3, LED PARKING FIELD POSTLIGHT.
PF-2	PHILIPS LUMEC *OR APPROVED EQUAL*	CANDELA SERIES - CITY OF KIRKLAND STANDARD CAND2-PC-C-40W42LED4K-R-RR5-277-GN8-SMOOTH-APRU-LBC2 *OR APPROVED EQUAL*	277	1	45W LED	LED DRIVER	45	16'-0" SINGLE HEADED STREETLIGHT - CITY OF KIRKLAND STANDARD 45W LED, 4000K WARK WHITE LED. ELECTRICAL CONTRACTOR TO COORDINATE REQUIRED OPTIONS (GFCI OUTLET, PLANTER SUPPORT, ETC)
PF-2A	PHILIPS LUMEC *OR APPROVED EQUAL*	CANDELA SERIES - CITY OF KIRKLAND STANDARD CAND2-PC-C-65W42LED4K-R-RR5-277-GN8-SMOOTH-APR4U-LBC2 *OR APPROVED EQUAL*	277	2	70W LED	LED DRIVER	140	16'-0" SINGLE HEADED STREETLIGHT - CITY OF KIRKLAND STANDARD (2) 70W LED, 3000K WARK WHITE LED. ELECTRICAL CONTRACTOR TO COORDINATE REQUIRED OPTIONS (GFCI OUTLET, PLANTER SUPPORT, ETC)
PF-3A	MCGRAW EDISON *OR APPROVED EQUAL*	GALLEON LED SERIES GLEON-AE-05-LED-E1-SL3-(VERIFY)-30FT SQUARE POLE *OR APPROVED EQUAL*	277	1	176W LED	LED DRIVER	176	30'-0", TYPE 3, LED PARKING FIELD POSTLIGHT.

GENERAL NOTES

1. ALL INDICATED CATALOG NUMBERS REPRESENT A DESIGN BASIS ONLY AND CORRESPOND TO THE LISTED MANUFACTURERS SERIES NUMBER. ALL OPTIONS, ACCESSORIES AND/OR FIXTURE COMPONENTS MAY NOT BE REFLECTED IN THIS NUMBER AND CONTRACTOR RESPONSIBLE FOR PROVIDING ALL SUCH ITEMS DISCLOSED IN FIXTURE DESCRIPTION AND/OR SPECIFICATIONS. SUBSTITUTION OF FIXTURE TYPES WILL ONLY BE ACCEPTED IF PHOTOMETRICS, CONSTRUCTION/COMPONENT QUALITY AND DESIGN INTEGRITY ARE SHOWN TO BE EQUAL TO THE DESIGN INTENT. FINAL DISCRETION TO BE DETERMINED BY ENGINEER. ALL SUBSTITUTIONS SHALL INCLUDE PHOTOMETRICS AND BE RECEIVED (5) BUSINESS DAYS PRIOR TO CLOSING FOR ENGINEERING ANALYSIS
2. PROVIDE COLD WEATHER BALLASTS FOR ALL OUTDOOR FIXTURES.
3. ALL FLUORESCENT AND HID LIGHTING FIXTURES SHALL BE PROVIDED WITH IN-LINE GLR FUSE.
4. CONTRACTOR TO VERIFY CEILING CONDITIONS FOR PROPER MOUNTING HARDWARE
5. WHERE FIXTURES ARE SHOWN SHADED PROVIDE BATTERY BALLAST WITH REMOTE TEST BUTTON.

LIGHTING TAKEOFF

TYPE	COUNT	DESCRIPTION
DF-1	7	LARGE CUSTOM LANTERNS
DF-2	6	3FT DIAMETER EXTERIOR RATED PENDANT
F3	10	
F-1	83	WET LISTED LINEAR LED UPLIGHT AT CANOPY. TAPE LIGHT 3.2W/FT
F-4	13	RECESSED LED DOWNLIGHT - EXTERIOR CANOPY
F-11	5	4'-0" STRIP (2)LAMP F32T8
S1	3	
X-01	12	EXIT

SEANTAC ELECTRIC INC.
7056 SOUTH 220TH STREET
KENT, WA 98032
PHONE (253) 872-5553
FAX (253) 872-4112
www.seatacelectric.com

THE VILLAGE AT TOTEM LAKE - BLDG A
KIRKLAND, WA 98034

No.	Description	Date

CENTERCAL PROPERTIES, LLC
1600 EAST FRANKLIN
EL SEGUNDO, CA 90245

ELECTRICAL SCHEDULES

PROJECT NUMBER	15115
DATE	04/27/2016
DRAWN BY	Author
CHECKED BY	Checker

E0.03

SCALE

60% CD SET

C:\Users\ianw\Documents\Totem Lake_Elec_Bldg_A_IanE.rvt

5/16/2016 3:34:59 PM

SITE ENLARGED ELECTRICAL PLAN

3/32" = 1'-0"

GENERAL NOTES

1. MULTI-WIRE BRANCH CIRCUITS SHALL MEET NEC 210.4 REQUIREMENTS.
2. COLOR OF ALL WIRING DEVICES AND COVER PLATES SHALL BE AS SELECTED BY THE ARCHITECT, U.N.O.. VERIFY WITH ARCHITECT PRIOR TO ORDERING
3. EQUIPMENT SHOWN IN BOLD IS NEW.
4. EQUIPMENT SHOWN IN DASHED IS EXISTING.

KEY NOTES

1 ELECTRICAL CONTRACTOR TO TERMINATE LIGHTING WIRING AT JUNCTION BOX. EXTERIOR LIGHTING TO BE CIRCUITED UNDER TENANT IMPROVEMENT PHASE.

2 SEA-TAC ELECTRIC TO PROVIDE 8' X 4' TELE/DATA BACKBOARD AND RECEPTACLE. ALL TRENCHING, CONDUITS, AND CONNECTIONS FROM TELE/DATA BACKBOARD TO TELEPHONE COMPANY FACILITIES TO BE PROVIDED BY WAVE.

SEA-TAC ELECTRIC INC.
7056 SOUTH 220TH STREET
KENT, WA 98032
PHONE (253) 872-6553
FAX (253) 872-4112
www.seatacelectric.com

THE VILLAGE AT TOTEM LAKE - BLDG A
KIRKLAND, WA 98034

No.	Description	Date

CENTERCAL PROPERTIES, LLC
1600 EAST FRANKLIN
EL SEGUNDO, CA 90245

ELECTRICAL SITE PLAN

PROJECT NUMBER	15115
DATE	04/27/2016
DRAWN BY	CM, IE, NP
CHECKED BY	CM

E1.01

SCALE 3/32" = 1'-0"

60% CD SET

C:\Users\ianel\Documents\Totem Lake_Elec_Bldg_A_IanEdmunds.rvt

5/16/2016 3:35:01 PM

GENERAL NOTES

1. MULTI-WIRE BRANCH CIRCUITS SHALL MEET NEC 210.4 REQUIREMENTS.
2. COLOR OF ALL WIRING DEVICES AND COVER PLATES SHALL BE AS SELECTED BY THE ARCHITECT, U.N.O.. VERIFY WITH ARCHITECT PRIOR TO ORDERING.
3. EQUIPMENT SHOWN BOLD IS NEW.
4. EQUIPMENT SHOWN DASHED IS EXISTING.
5. ITEMS NOTED AS "TYPICAL" ON ANY DRAWING REFERS TO ALL DRAWINGS.
6. PROVIDE NYLON PULL STRING IN ALL EMPTY RACEWAYS.
7. NO STRUCTURAL MEMBERS SHALL BE CUT OR ALTERED WITHOUT PRIOR APPROVAL OF THE ARCHITECT AND STRUCTURAL ENGINEER.
8. LOCATIONS OF ALL MOUNTED DEVICES ARE SHOWN SCHEMATICALLY. COORDINATE WITH THE ARCHITECTURAL DRAWINGS, ELEVATIONS AND CASEWORK SUPPLIERS SHOP DRAWINGS FOR EXACT LOCATION OF DEVICES PRIOR TO ROUGH IN.
9. LOW VOLTAGE WIRING NOT RUN IN A METALLIC RACEWAY SHALL BE PLENUM RATED.
10. EQUIPMENT, LUMINAIRES, RACEWAYS, DEVICES, ETC. SHALL BE UL LISTED.
11. CABLING NOT RUN IN A METALLIC RACEWAY SHALL BE PLENUM RATED.

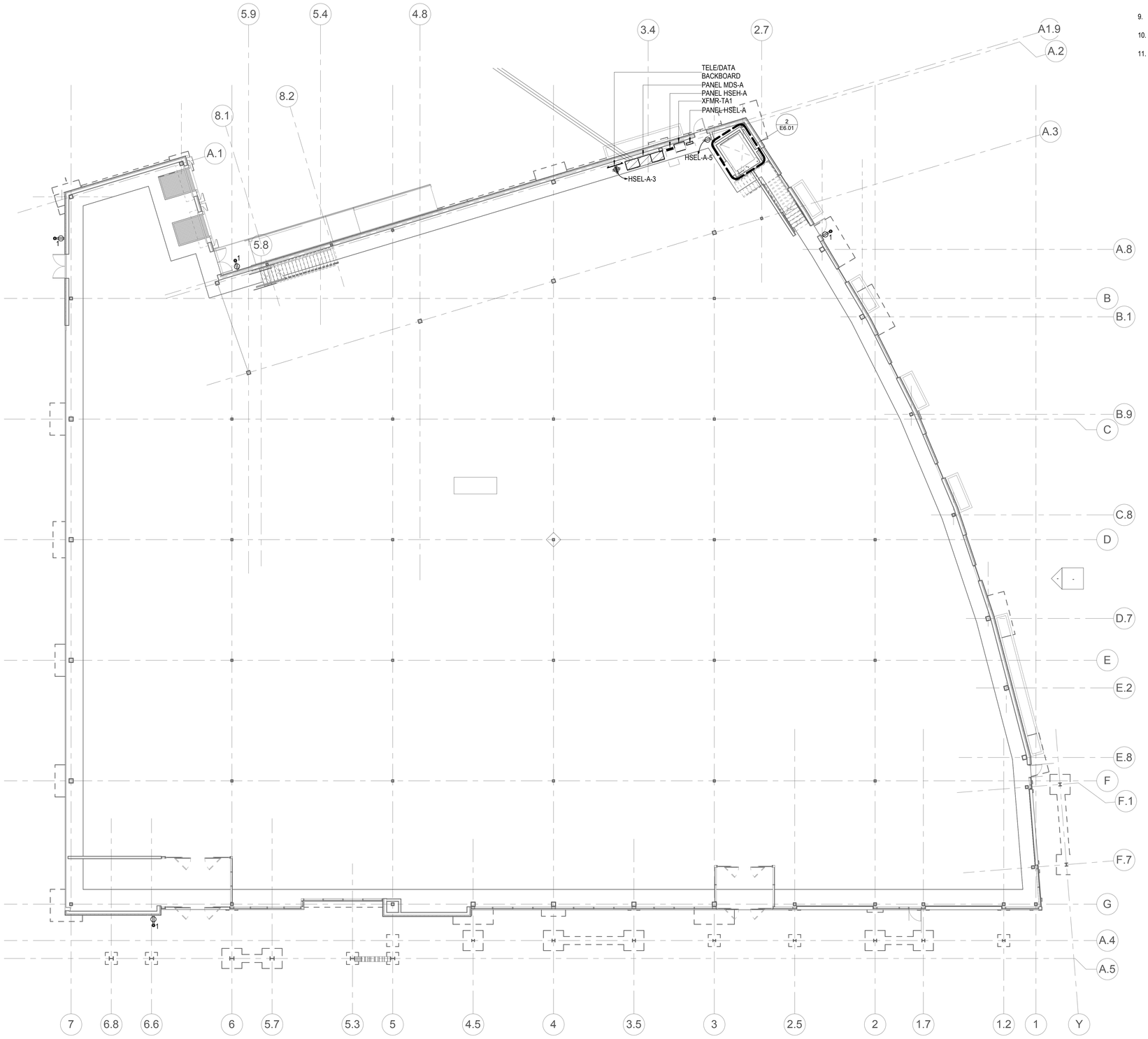

LEVEL 1 POWER PLAN
3/32" = 1'-0"

SEANTAC ELECTRIC INC.
7056 SOUTH 220TH STREET
KENT, WA 98032
PHONE (253) 872-6553
FAX (253) 872-4112
www.seatacelectric.com

THE VILLAGE AT TOTEM LAKE - BLDG A
KIRKLAND, WA 98034

No.	Description	Date

CENTERCAL PROPERTIES, LLC
1600 EAST FRANKLIN
EL SEGUNDO, CA 90245

LEVEL 1 POWER PLAN

PROJECT NUMBER	15115
DATE	04/27/2016
DRAWN BY	CM, IE, NP
CHECKED BY	CM

E2.01

SCALE 3/32" = 1'-0"

60% CD SET

C:\Users\iane\Documents\Totem Lake_Elec_Bldg_A_IanEdmunds.rvt

5/16/2016 3:35:02 PM

GENERAL NOTES

1. MULTI-WIRE BRANCH CIRCUITS SHALL MEET NEC 210.4 REQUIREMENTS.
2. COLOR OF ALL WIRING DEVICES AND COVER PLATES SHALL BE AS SELECTED BY THE ARCHITECT, U.N.O.. VERIFY WITH ARCHITECT PRIOR TO ORDERING.
3. EQUIPMENT SHOWN BOLD IS NEW.
4. EQUIPMENT SHOWN DASHED IS EXISTING.
5. ITEMS NOTED AS "TYPICAL" ON ANY DRAWING REFERS TO ALL DRAWINGS.
6. PROVIDE NYLON PULL STRING IN ALL EMPTY RACEWAYS.
7. NO STRUCTURAL MEMBERS SHALL BE CUT OR ALTERED WITHOUT PRIOR APPROVAL OF THE ARCHITECT AND STRUCTURAL ENGINEER.
8. LOCATIONS OF ALL MOUNTED DEVICES ARE SHOWN SCHEMATICALLY. COORDINATE WITH THE ARCHITECTURAL DRAWINGS, ELEVATIONS AND CASEWORK SUPPLIERS SHOP DRAWINGS FOR EXACT LOCATION OF DEVICES PRIOR TO ROUGH IN.
9. LOW VOLTAGE WIRING NOT RUN IN A METALLIC RACEWAY SHALL BE PLENUM RATED.
10. EQUIPMENT, LUMINAIRES, RACEWAYS, DEVICES, ETC. SHALL BE UL LISTED.
11. CABLING NOT RUN IN A METALLIC RACEWAY SHALL BE PLENUM RATED.

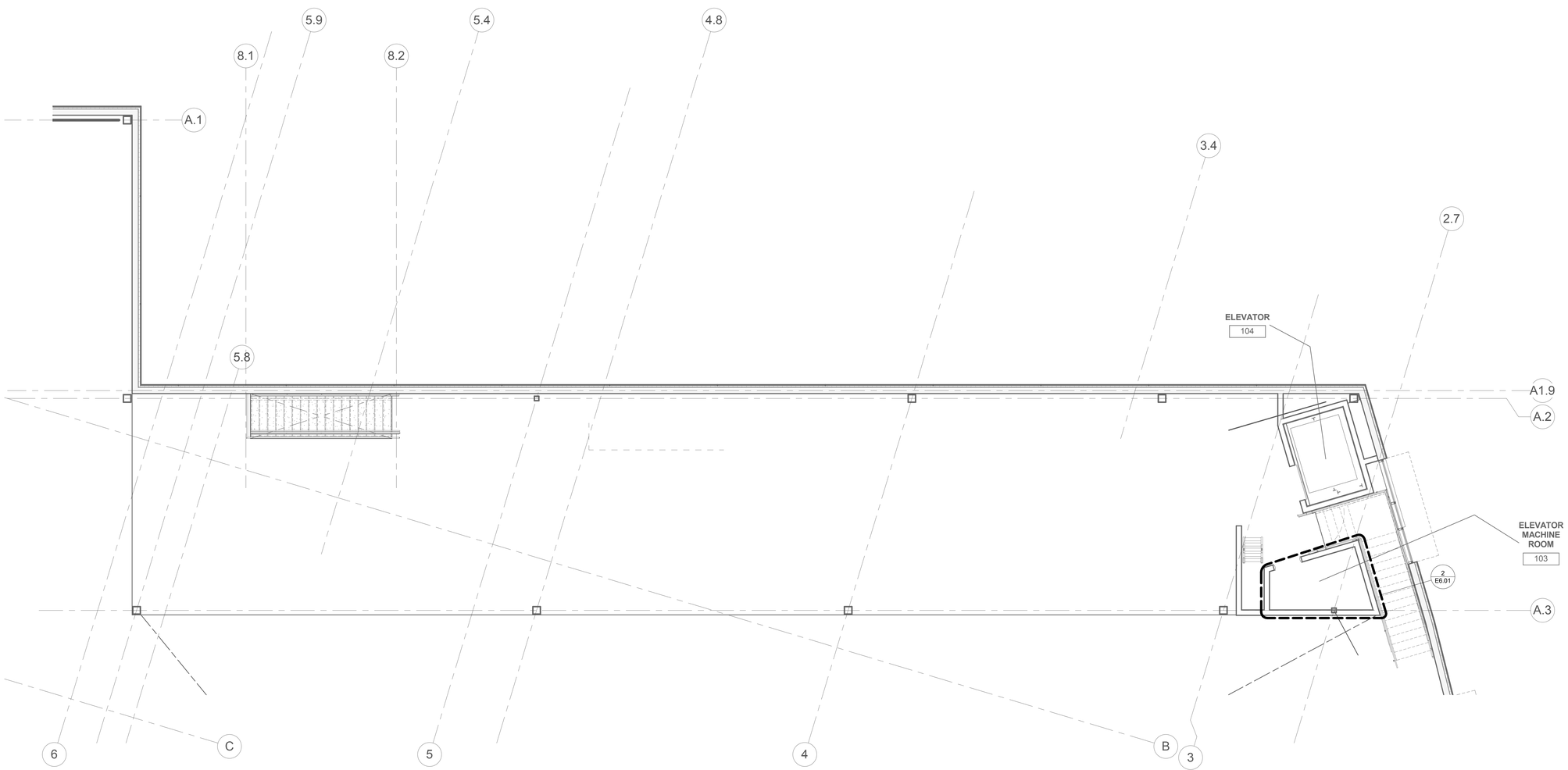

MEZZANINE POWER PLAN
3/16" = 1'-0"

SEATAC ELECTRIC INC.
7056 SOUTH 220TH STREET
KENT, WA 98032
PHONE (253) 872-6553
FAX (253) 872-4112
www.seatacelectric.com

THE VILLAGE AT TOTEM LAKE - BLDG A
KIRKLAND, WA 98034

No.	Description	Date

CENTERCAL PROPERTIES, LLC
1600 EAST FRANKLIN
EL SEGUNDO, CA 90245

MEZZANINE POWER PLAN

PROJECT NUMBER	15115
DATE	04/27/2016
DRAWN BY	CM, IE, NP
CHECKED BY	CM

E2.02

SCALE 3/16" = 1'-0"

60% CD SET

C:\Users\ianel\Documents\Totem Lake_Elec_Bldg_A_IanEdmunds.rvt

5/16/2016 3:35:02 PM

GENERAL NOTES

1. MULTI-WIRE BRANCH CIRCUITS SHALL MEET NEC 210.4 REQUIREMENTS.
2. COLOR OF ALL WIRING DEVICES AND COVER PLATES SHALL BE AS SELECTED BY THE ARCHITECT, U.N.O.. VERIFY WITH ARCHITECT PRIOR TO ORDERING.
3. EQUIPMENT SHOWN BOLD IS NEW.
4. EQUIPMENT SHOWN DASHED IS EXISTING.
5. ITEMS NOTED AS "TYPICAL" ON ANY DRAWING REFERS TO ALL DRAWINGS.
6. PROVIDE NYLON PULL STRING IN ALL EMPTY RACEWAYS.
7. NO STRUCTURAL MEMBERS SHALL BE CUT OR ALTERED WITHOUT PRIOR APPROVAL OF THE ARCHITECT AND STRUCTURAL ENGINEER.
8. LOCATIONS OF ALL MOUNTED DEVICES ARE SHOWN SCHEMATICALLY. COORDINATE WITH THE ARCHITECTURAL DRAWINGS, ELEVATIONS AND CASEWORK SUPPLIERS SHOP DRAWINGS FOR EXACT LOCATION OF DEVICES PRIOR TO ROUGH IN.
9. LOW VOLTAGE WIRING NOT RUN IN A METALLIC RACEWAY SHALL BE PLENUM RATED.
10. EQUIPMENT, LUMINAIRES, RACEWAYS, DEVICES, ETC. SHALL BE UL LISTED.
11. CABLING NOT RUN IN A METALLIC RACEWAY SHALL BE PLENUM RATED.

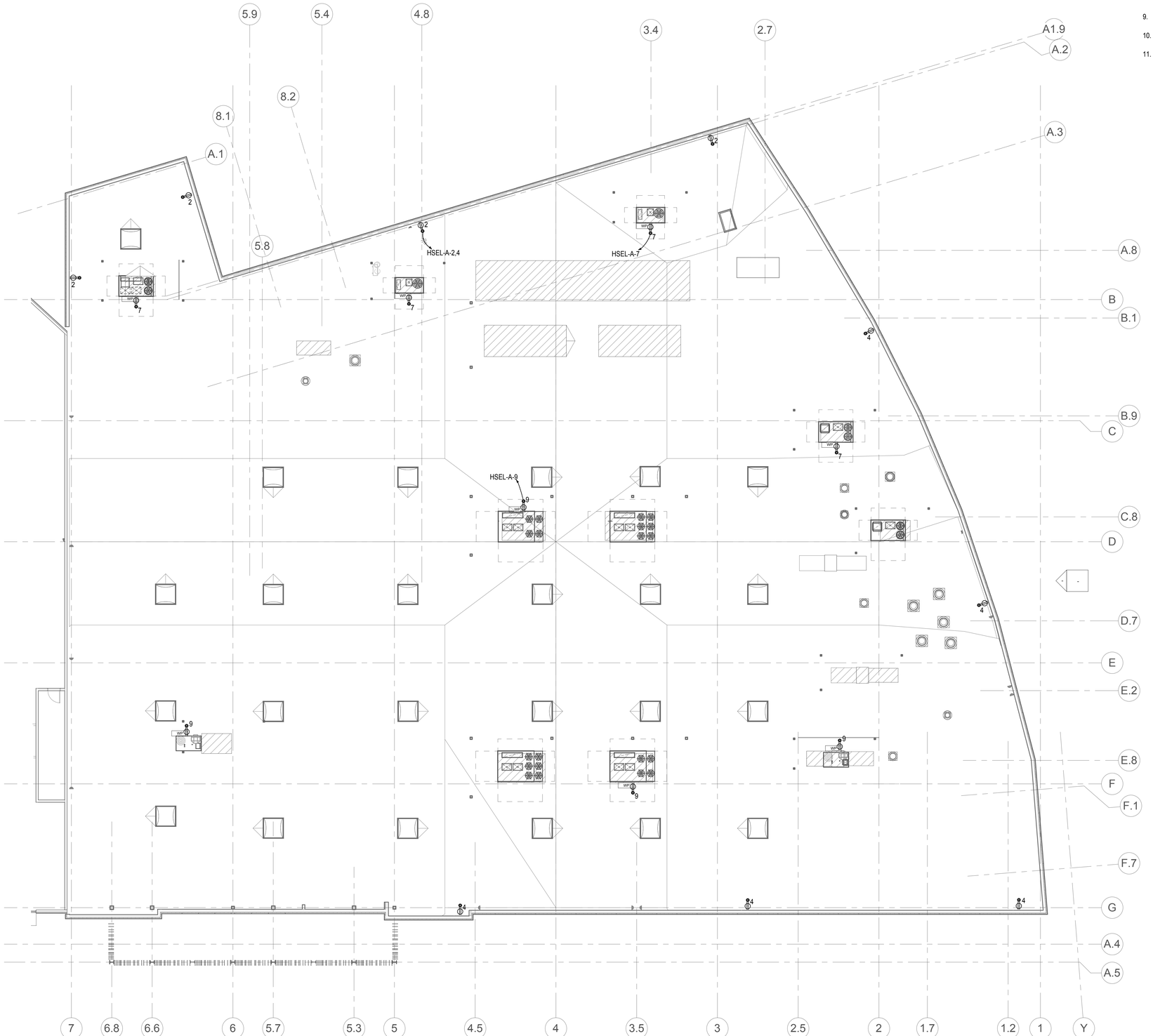

MAIN ROOF POWER PLAN

3/32" = 1'-0"

SEATAC ELECTRIC INC.

7056 SOUTH 220TH STREET
KENT, WA 98032

PHONE (253) 872-6553
FAX (253) 872-4112

www.seatacelectric.com

THE VILLAGE AT TOTEM LAKE - BLDG A
KIRKLAND, WA 98034

No.	Description	Date

CENTERCAL PROPERTIES, LLC
1600 EAST FRANKLIN
EL SEGUNDO, CA 90245

MAIN ROOF POWER PLAN

PROJECT NUMBER	15115
DATE	04/27/2016
DRAWN BY	CM, IE, NP
CHECKED BY	CM

E2.03

SCALE 3/32" = 1'-0"

60% CD SET

C:\Users\ianel\Documents\Totem Lake_Elec_Bldg_A_IanEdmunds.rvt

5/16/2016 3:35:03 PM

GENERAL NOTES

1. MULTI-WIRE BRANCH CIRCUITS SHALL MEET NEC 210.4 REQUIREMENTS.
2. COLOR OF ALL WIRING DEVICES AND COVER PLATES SHALL BE AS SELECTED BY THE ARCHITECT, U.N.O.. VERIFY WITH ARCHITECT PRIOR TO ORDERING.
3. EQUIPMENT SHOWN BOLD IS NEW.
4. EQUIPMENT SHOWN DASHED IS EXISTING.
5. ITEMS NOTED AS "TYPICAL" ON ANY DRAWING REFERS TO ALL DRAWINGS.
6. PROVIDE NYLON PULL STRING IN ALL EMPTY RACEWAYS.
7. NO STRUCTURAL MEMBERS SHALL BE CUT OR ALTERED WITHOUT PRIOR APPROVAL OF THE ARCHITECT AND STRUCTURAL ENGINEER.
8. LOCATIONS OF ALL MOUNTED DEVICES ARE SHOWN SCHEMATICALLY. COORDINATE WITH THE ARCHITECTURAL DRAWINGS, ELEVATIONS AND CASEWORK SUPPLIERS SHOP DRAWINGS FOR EXACT LOCATION OF DEVICES PRIOR TO ROUGH IN.
9. EQUIPMENT, LUMINAIRES, RACEWAYS, DEVICES, ETC. SHALL BE UL LISTED.

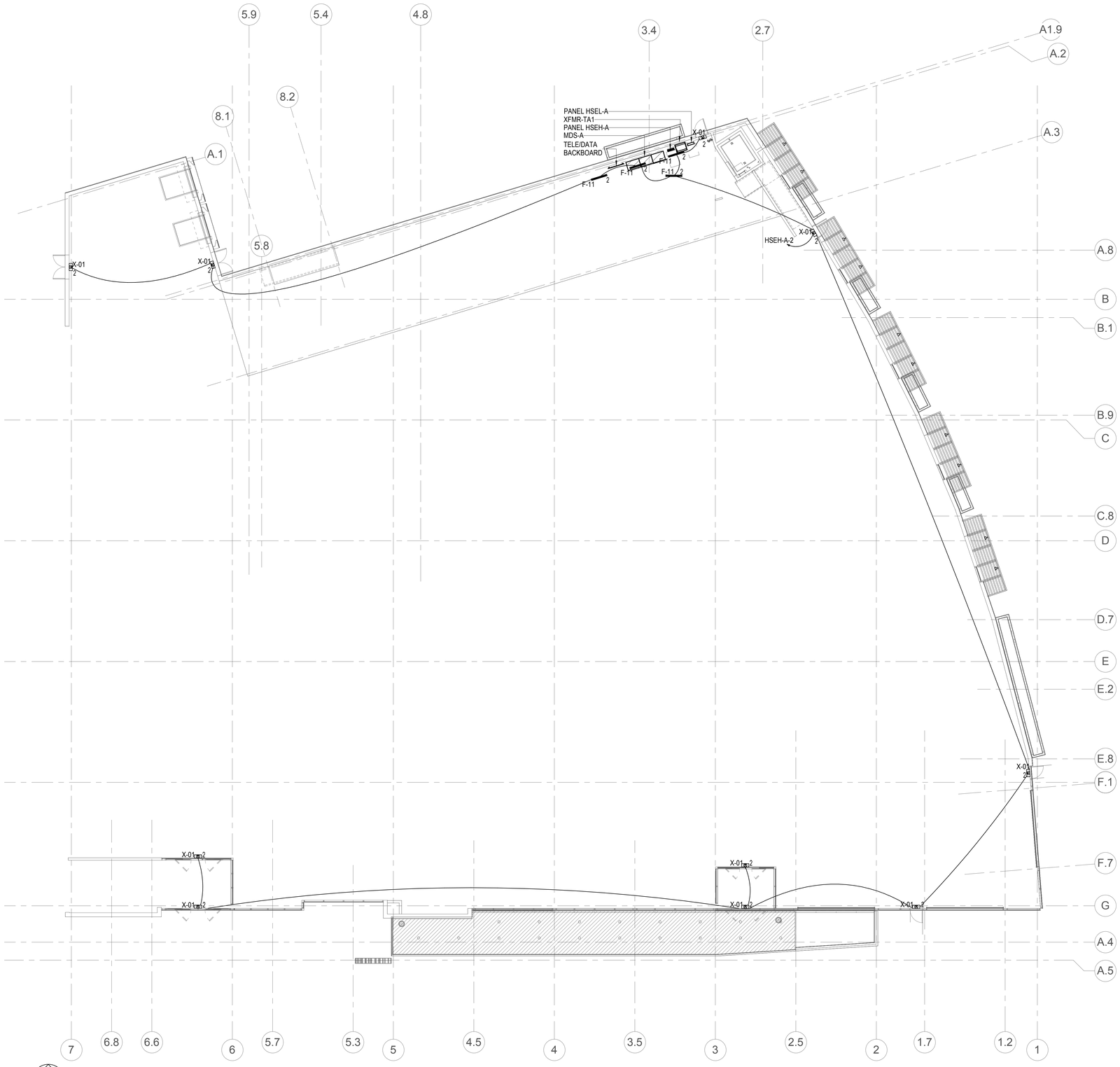

LEVEL 1 LIGHTING PLAN

3/32" = 1'-0"

SEATAC ELECTRIC INC.
7056 SOUTH 220TH STREET
KENT, WA 98032
PHONE (253) 872-6553
FAX (253) 872-4112
www.seataclectric.com

THE VILLAGE AT TOTEM LAKE - BLDG A
KIRKLAND, WA 98034

No.	Description	Date

CENTERCAL PROPERTIES, LLC
1600 EAST FRANKLIN
EL SEGUNDO, CA 90245

LEVEL 1 LIGHTING PLAN

PROJECT NUMBER	15115
DATE	04/27/2016
DRAWN BY	CM, IE, NP
CHECKED BY	CM

E3.01

SCALE 3/32" = 1'-0"

60% CD SET

C:\Users\iane\Documents\Totem Lake_Elec_Bldg_A_IanEdmunds.rvt

5/16/2016 3:35:03 PM

GENERAL NOTES

1. MULTI-WIRE BRANCH CIRCUITS SHALL MEET NEC 210.4 REQUIREMENTS.
2. COLOR OF ALL WIRING DEVICES AND COVER PLATES SHALL BE AS SELECTED BY THE ARCHITECT, U.N.O.. VERIFY WITH ARCHITECT PRIOR TO ORDERING.
3. EQUIPMENT SHOWN BOLD IS NEW.
4. EQUIPMENT SHOWN DASHED IS EXISTING.
5. ITEMS NOTED AS "TYPICAL" ON ANY DRAWING REFERS TO ALL DRAWINGS.
6. PROVIDE NYLON PULL STRING IN ALL EMPTY RACEWAYS.
7. NO STRUCTURAL MEMBERS SHALL BE CUT OR ALTERED WITHOUT PRIOR APPROVAL OF THE ARCHITECT AND STRUCTURAL ENGINEER.
8. LOCATIONS OF ALL MOUNTED DEVICES ARE SHOWN SCHEMATICALLY. COORDINATE WITH THE ARCHITECTURAL DRAWINGS, ELEVATIONS AND CASEWORK SUPPLIERS SHOP DRAWINGS FOR EXACT LOCATION OF DEVICES PRIOR TO ROUGH IN.
9. EQUIPMENT, LUMINAIRES, RACEWAYS, DEVICES, ETC. SHALL BE UL LISTED.

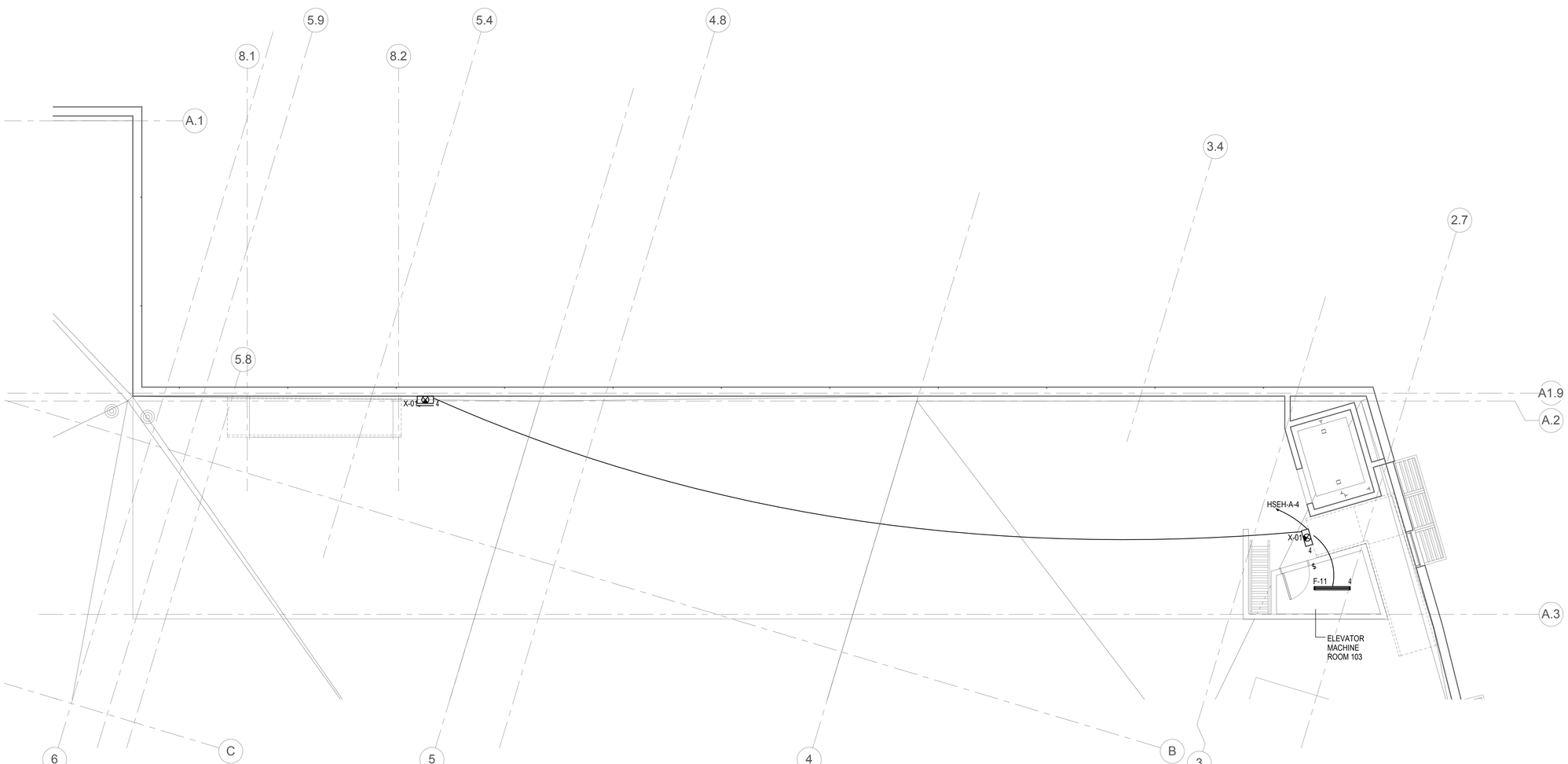

MEZZANINE LIGHTING PLAN

3/16" = 1'-0"

SEANTAC ELECTRIC INC.

7056 SOUTH 220TH STREET
KENT, WA 98032

PHONE (253) 872-6553
FAX (253) 872-4112

www.seatacelectric.com

THE VILLAGE AT TOTEM LAKE - BLDG A
KIRKLAND, WA 98034

No.	Description	Date

CENTERCAL PROPERTIES, LLC
1600 EAST FRANKLIN
EL SEGUNDO, CA 90245

MEZZANINE LIGHTING PLAN

PROJECT NUMBER	15115
DATE	04/27/2016
DRAWN BY	CM, IE, NP
CHECKED BY	CM

E3.02

SCALE 3/16" = 1'-0"

60% CD SET

C:\Users\sean\Documents\Totem Lake_Elec_Bldg_A_JanEdmunds.rvt

5/16/2016 3:35:04 PM

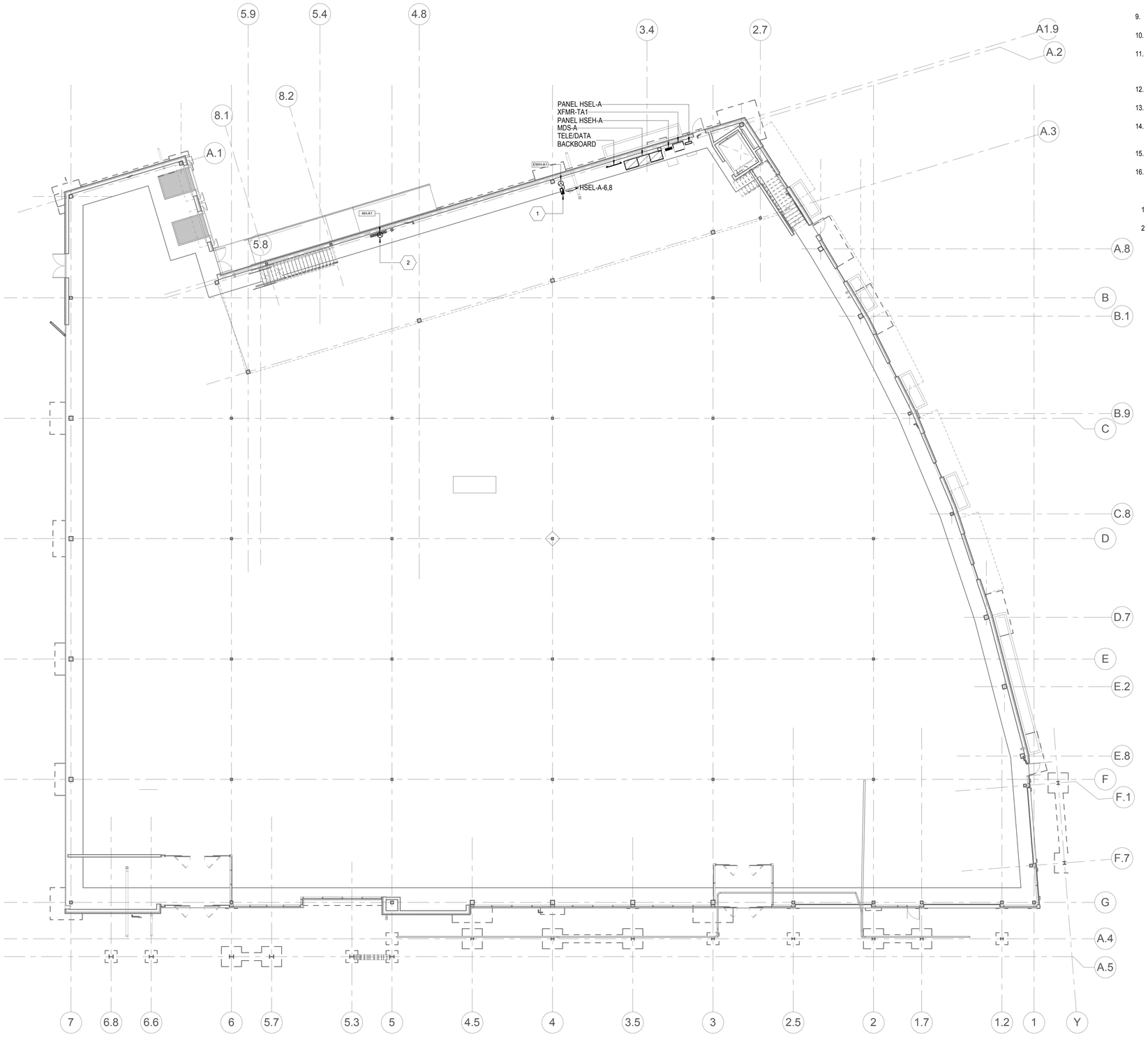

LEVEL 1 MECHANICAL POWER PLAN

3/32" = 1'-0"

GENERAL NOTES

1. MULTI-WIRE BRANCH CIRCUITS SHALL MEET NEC 210.4 REQUIREMENTS.
2. COLOR OF ALL WIRING DEVICES AND COVER PLATES SHALL BE AS SELECTED BY THE ARCHITECT, U.N.O.. VERIFY WITH ARCHITECT PRIOR TO ORDERING.
3. EQUIPMENT SHOWN BOLD IS NEW.
4. EQUIPMENT SHOWN DASHED IS EXISTING.
5. ITEMS NOTED AS "TYPICAL" ON ANY DRAWING REFERS TO ALL DRAWINGS.
6. PROVIDE NYLON PULL STRING IN ALL EMPTY RACEWAYS.
7. NO STRUCTURAL MEMBERS SHALL BE CUT OR ALTERED WITHOUT PRIOR APPROVAL OF THE ARCHITECT AND STRUCTURAL ENGINEER.
8. LOCATIONS OF ALL MOUNTED DEVICES ARE SHOWN SCHEMATICALLY. COORDINATE WITH THE ARCHITECTURAL DRAWINGS, ELEVATIONS AND CASEWORK SUPPLIERS SHOP DRAWINGS FOR EXACT LOCATION OF DEVICES PRIOR TO ROUGH IN.
9. EQUIPMENT, LUMINAIRES, RACEWAYS, DEVICES, ETC. SHALL BE UL LISTED.
10. WHERE A CONFLICT EXISTS THE MOST INEXPENSIVE OPTION SHALL GOVERN.
11. PRIOR TO ORDERING EQUIPMENT OR ROUGH-IN, COORDINATE WITH THE MECHANICAL CONTRACTOR TO ESTABLISH THE ACTUAL LOAD AND OVERCURRENT PROTECTION REQUIREMENTS FOR EACH PIECE OF EQUIPMENT.
12. REFER TO MECHANICAL EQUIPMENT CONNECTION SCHEDULE FOR EQUIPMENT RATINGS AND FEEDER SIZES.
13. PROVIDE DISCONNECT SWITCH FOR EACH PIECE OF EQUIPMENT AS SHOWN ON MECHANICAL EQUIPMENT CONNECTION SCHEDULE.
14. PRIOR TO ROUGH-IN OF ALL EQUIPMENT SPECIFIED BY OTHER DIVISIONS COORDINATE WITH THE EQUIPMENT MANUFACTURER TO ESTABLISH ALL REQUIREMENTS FOR EACH PIECE OF EQUIPMENT.
15. VERIFY ELECTRICAL REQUIREMENTS WITH MANUFACTURER SHOP DRAWINGS PRIOR TO ROUGH-IN.
16. INSTALL AND WIRE EQUIPMENT PER MANUFACTURER SHOP DRAWING.

KEY NOTES

1 CONFIRM LOCATION OF MECHANICAL UNIT EWH-A1 WITH OWNER OR OWNER(S) REPRESENTATIVE PRIOR TO ANY ROUGH-IN.

2 INDOOR UNIT AH-A1 IS POWERED FROM OUTDOOR UNIT HP-1A

SEATAC ELECTRIC INC.
7056 SOUTH 220TH STREET
KENT, WA 98032
PHONE (253) 872-6553
FAX (253) 872-4112
www.seataclectric.com

THE VILLAGE AT TOTEM LAKE - BLDG A
KIRKLAND, WA 98034

No.	Description	Date

CENTERCAL PROPERTIES, LLC
1600 EAST FRANKLIN
EL SEGUNDO, CA 90245

LEVEL 1 MECHANICAL POWER PLAN

PROJECT NUMBER	15115
DATE	04/27/2016
DRAWN BY	CM, IE, NP
CHECKED BY	CM

E4.01

SCALE 3/32" = 1'-0"

60% CD SET

C:\Users\ianel\Documents\Totem Lake_Elec_Bldg_A_IanEdmunds.rvt

5/16/2016 3:35:05 PM

GENERAL NOTES

1. MULTI-WIRE BRANCH CIRCUITS SHALL MEET NEC 210.4 REQUIREMENTS.
2. COLOR OF ALL WIRING DEVICES AND COVER PLATES SHALL BE AS SELECTED BY THE ARCHITECT, U.N.O.. VERIFY WITH ARCHITECT PRIOR TO ORDERING.
3. EQUIPMENT SHOWN BOLD IS NEW.
4. EQUIPMENT SHOWN DASHED IS EXISTING.
5. ITEMS NOTED AS "TYPICAL" ON ANY DRAWING REFERS TO ALL DRAWINGS.
6. PROVIDE NYLON PULL STRING IN ALL EMPTY RACEWAYS.
7. NO STRUCTURAL MEMBERS SHALL BE CUT OR ALTERED WITHOUT PRIOR APPROVAL OF THE ARCHITECT AND STRUCTURAL ENGINEER.
8. LOCATIONS OF ALL MOUNTED DEVICES ARE SHOWN SCHEMATICALLY. COORDINATE WITH THE ARCHITECTURAL DRAWINGS, ELEVATIONS AND CASEWORK SUPPLIERS SHOP DRAWINGS FOR EXACT LOCATION OF DEVICES PRIOR TO ROUGH IN.
9. EQUIPMENT, LUMINAIRES, RACEWAYS, DEVICES, ETC. SHALL BE UL LISTED.
10. WHERE A CONFLICT EXISTS THE MOST INEXPENSIVE OPTION SHALL GOVERN.
11. PRIOR TO ORDERING EQUIPMENT OR ROUGH-IN, COORDINATE WITH THE MECHANICAL CONTRACTOR TO ESTABLISH THE ACTUAL LOAD AND OVERCURRENT PROTECTION REQUIREMENTS FOR EACH PIECE OF EQUIPMENT.
12. REFER TO MECHANICAL EQUIPMENT CONNECTION SCHEDULE FOR EQUIPMENT RATINGS AND FEEDER SIZES.
13. PROVIDE DISCONNECT SWITCH FOR EACH PIECE OF EQUIPMENT AS SHOWN ON MECHANICAL EQUIPMENT CONNECTION SCHEDULE.
14. PRIOR TO ROUGH-IN OF ALL EQUIPMENT SPECIFIED BY OTHER DIVISIONS COORDINATE WITH THE EQUIPMENT MANUFACTURER TO ESTABLISH ALL REQUIREMENTS FOR EACH PIECE OF EQUIPMENT.
15. VERIFY ELECTRICAL REQUIREMENTS WITH MANUFACTURER SHOP DRAWINGS PRIOR TO ROUGH-IN.
16. INSTALL AND WIRE EQUIPMENT PER MANUFACTURER SHOP DRAWING.

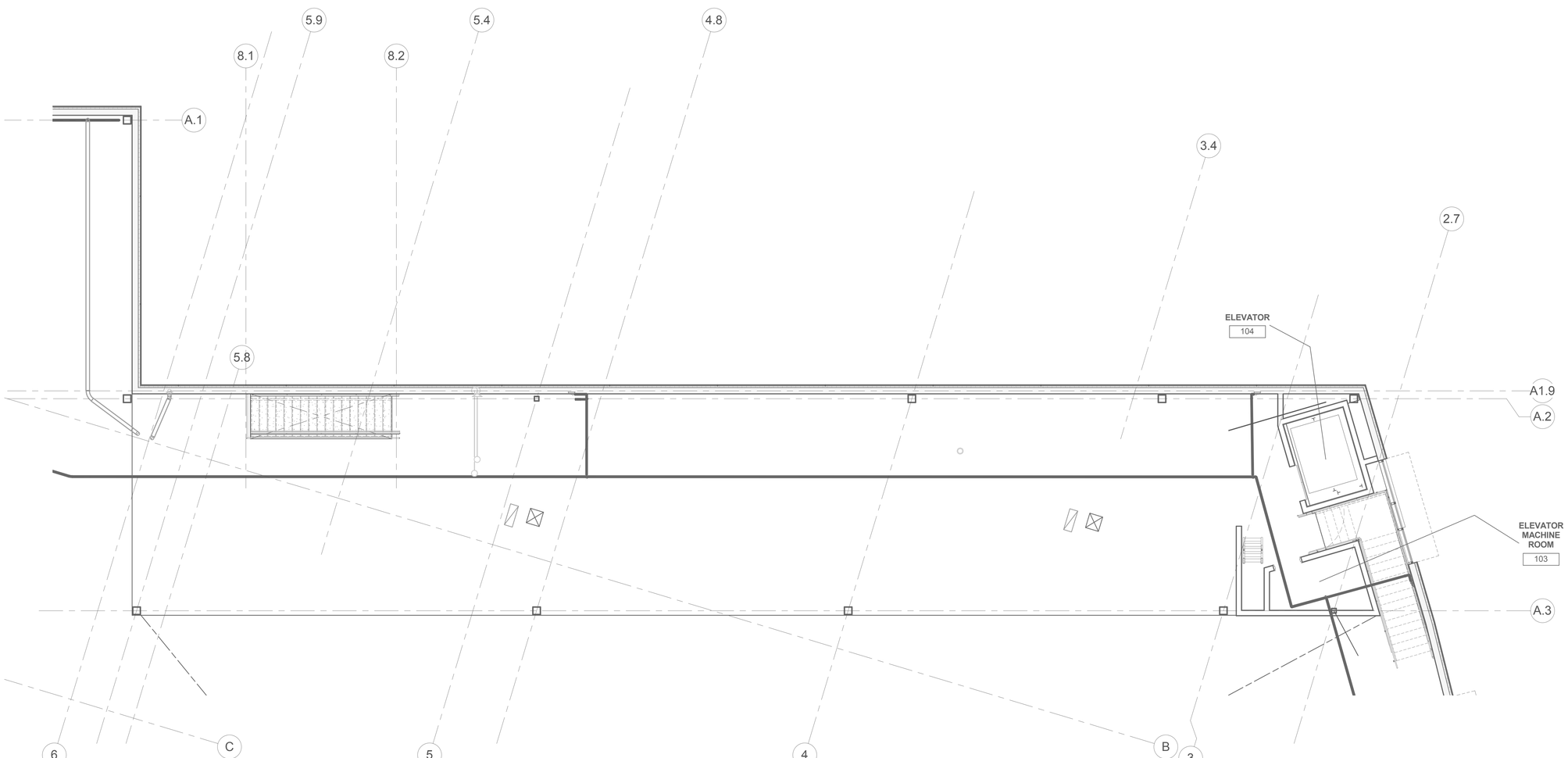

MEZZANINE MECHANICAL POWER PLAN

3/16" = 1'-0"

SEATAC ELECTRIC INC.
7056 SOUTH 220TH STREET
KENT, WA 98032
PHONE (253) 872-6553
FAX (253) 872-4112
www.seatacelectric.com

THE VILLAGE AT TOTEM LAKE - BLDG A
KIRKLAND, WA 98034

No.	Description	Date

CENTERCAL PROPERTIES, LLC
1600 EAST FRANKLIN
EL SEGUNDO, CA 90245

MEZZANINE MECHANICAL POWER PLAN

PROJECT NUMBER	15115
DATE	04/27/2016
DRAWN BY	CM, IE, NP
CHECKED BY	CM

E4.02

SCALE 3/16" = 1'-0"

60% CD SET

C:\Users\ianel\Documents\Totem Lake_Elec_Bldg_A_IanEdmunds.rvt

5/16/2016 3:35:06 PM

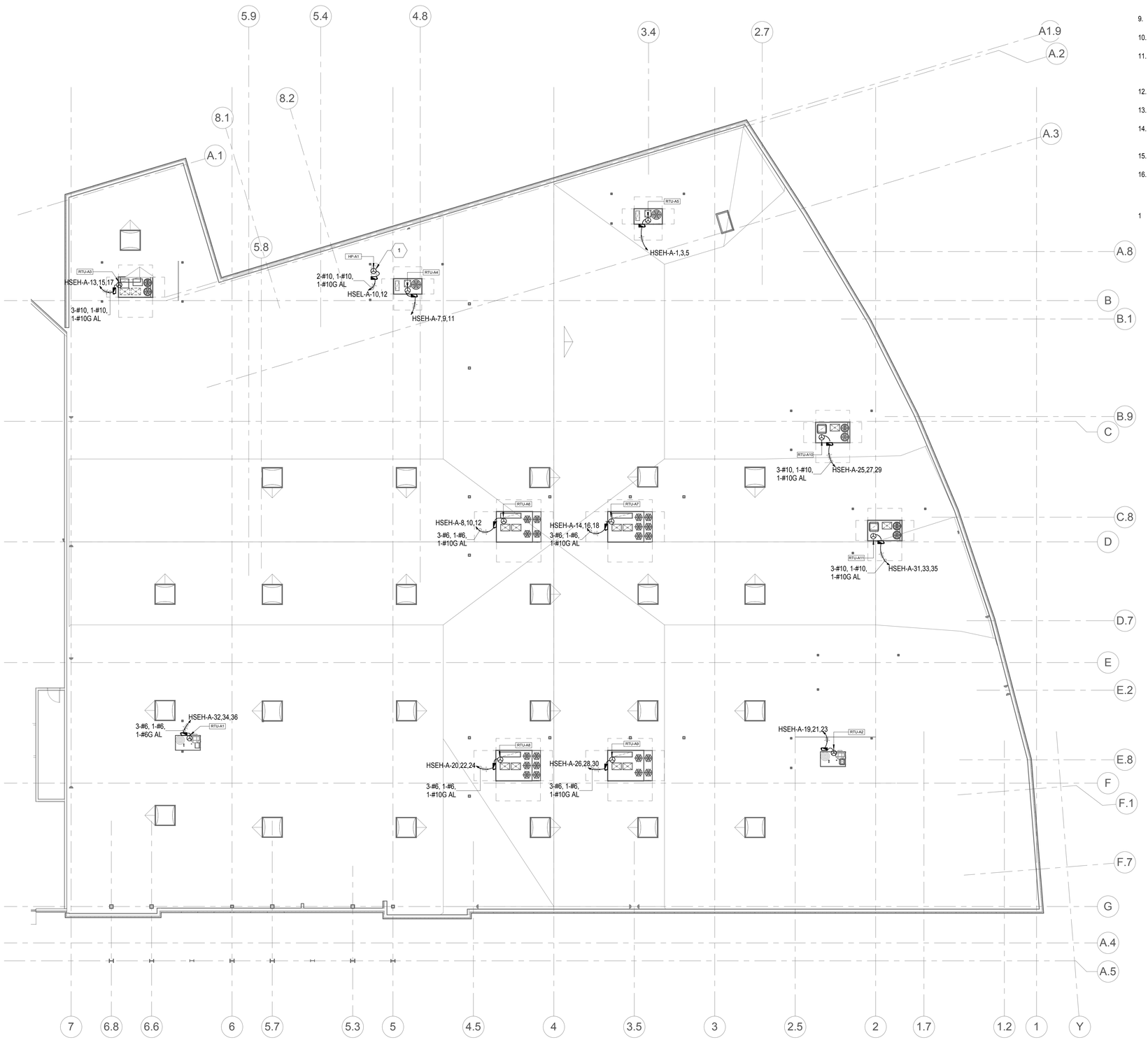

MAIN ROOF MECHANICAL POWER PLAN

3/32" = 1'-0"

GENERAL NOTES

1. MULTI-WIRE BRANCH CIRCUITS SHALL MEET NEC 210.4 REQUIREMENTS.
2. COLOR OF ALL WIRING DEVICES AND COVER PLATES SHALL BE AS SELECTED BY THE ARCHITECT, U.N.O.. VERIFY WITH ARCHITECT PRIOR TO ORDERING.
3. EQUIPMENT SHOWN BOLD IS NEW.
4. EQUIPMENT SHOWN DASHED IS EXISTING.
5. ITEMS NOTED AS "TYPICAL" ON ANY DRAWING REFERS TO ALL DRAWINGS.
6. PROVIDE NYLON PULL STRING IN ALL EMPTY RACEWAYS.
7. NO STRUCTURAL MEMBERS SHALL BE CUT OR ALTERED WITHOUT PRIOR APPROVAL OF THE ARCHITECT AND STRUCTURAL ENGINEER.
8. LOCATIONS OF ALL MOUNTED DEVICES ARE SHOWN SCHEMATICALLY. COORDINATE WITH THE ARCHITECTURAL DRAWINGS, ELEVATIONS AND CASEWORK SUPPLIERS SHOP DRAWINGS FOR EXACT LOCATION OF DEVICES PRIOR TO ROUGH IN.
9. EQUIPMENT, LUMINAIRES, RACEWAYS, DEVICES, ETC. SHALL BE UL LISTED.
10. WHERE A CONFLICT EXISTS THE MOST INEXPENSIVE OPTION SHALL GOVERN.
11. PRIOR TO ORDERING EQUIPMENT OR ROUGH-IN, COORDINATE WITH THE MECHANICAL CONTRACTOR TO ESTABLISH THE ACTUAL LOAD AND OVERCURRENT PROTECTION REQUIREMENTS FOR EACH PIECE OF EQUIPMENT.
12. REFER TO MECHANICAL EQUIPMENT CONNECTION SCHEDULE FOR EQUIPMENT RATINGS AND FEEDER SIZES.
13. PROVIDE DISCONNECT SWITCH FOR EACH PIECE OF EQUIPMENT AS SHOWN ON MECHANICAL EQUIPMENT CONNECTION SCHEDULE.
14. PRIOR TO ROUGH-IN OF ALL EQUIPMENT SPECIFIED BY OTHER DIVISIONS COORDINATE WITH THE EQUIPMENT MANUFACTURER TO ESTABLISH ALL REQUIREMENTS FOR EACH PIECE OF EQUIPMENT.
15. VERIFY ELECTRICAL REQUIREMENTS WITH MANUFACTURER SHOP DRAWINGS PRIOR TO ROUGH-IN.
16. INSTALL AND WIRE EQUIPMENT PER MANUFACTURER SHOP DRAWING.

KEY NOTES

1 INDOOR UNIT AH-A1 IS POWERED FROM OUTDOOR UNIT HP-1A

SEANTAC ELECTRIC INC.
7056 SOUTH 220TH STREET
KENT, WA 98032
PHONE (253) 872-6553
FAX (253) 872-4112
www.seatacelectric.com

THE VILLAGE AT TOTEM LAKE - BLDG A
KIRKLAND, WA 98034

No.	Description	Date

CENTERCAL PROPERTIES, LLC
1600 EAST FRANKLIN
EL SEGUNDO, CA 90245

MAIN ROOF MECHANICAL POWER PLAN

PROJECT NUMBER	15115
DATE	04/27/2016
DRAWN BY	CM, IE, NP
CHECKED BY	CM

E4.03

SCALE 3/32" = 1'-0"

60% CD SET

C:\Users\ianel\Documents\Totem Lake_Elec_Bldg_A_IanEdmunds.rvt

5/19/2016 3:35:06 PM

FAULT CURRENT @ UTILITY XFMR SECONDARY ========> 45200.00 Amps

Calculation for Fault Value at COMMERCIAL METER CENTER

Conductor		
Starting Fault Value at UTILITY	===>	45200.00 Amps
Wire Size 750 kcmil		
Conductor type (AL=Alum, CU=Copper)		AL
Conduit type (S=Steel, P=PVC)		P
Z /1000' @ .85pf (NEC Table 9)		0.045
No. of Parellel Runs		6
Distance (Feet)		115
Voltage (L-L)		480
Phase (1ph = 2, 3ph = 1.73)		1.73
f-Factor		0.140508
Multiplier "M" = 1/(1+f)		0.876802
Line to Line RMS Fault at COMMERCIAL METER CENTER		**39,631.45 Amps**

Calculation for Fault Value at PANEL HSEH

Conductor		
Starting Fault Value at COMMERCIAL METER...	===>	39631.45 Amps
Wire Size 250 kcmil		
Conductor type (AL=Alum, CU=Copper)		AL
Conduit type (S=Steel, P=PVC)		S
Z /1000' @ .85pf (NEC Table 9)		0.1
No. of Parellel Runs		1
Distance (Feet)		12
Voltage (L-L)		480
Phase (1ph = 2, 3ph = 1.73)		1.73
f-Factor		0.171406
Multiplier "M" = 1/(1+f)		0.853675
Line to Line RMS Fault at PANEL HSEH		**33,832.37 Amps**

Calculation for Fault Value at XFMR-HSE PRIMARY FEEDER

Conductor		
Starting Fault Value at PANEL HSEH	===>	33832.37 Amps
Wire Size 1/0 kcmil		
Conductor type (AL=Alum, CU=Copper)		AL
Conduit type (S=Steel, P=PVC)		S
Z /1000' @ .85pf (NEC Table 9)		0.2
No. of Parellel Runs		1
Distance (Feet)		5
Voltage (L-L)		480
Phase (1ph = 2, 3ph = 1.73)		1.73
f-Factor		0.121938
Multiplier "M" = 1/(1+f)		0.891315
Line to Line RMS Fault at XFMR-HSE PRIMARY FEEDER		**30,155.31 Amps**

Calculation for Fault Value at XFMR-HSE SECONDARY FEEDER

Transformer		
Starting Fault Value at Primary to XFMR-HSE PRIMARY...	===>	30155.31
Transformer %Z (150-deg rise)		5.9
Transformer KVA		75
Line to Line Primary Voltage		480
Line to Line Secondary Voltage		208
Phase (1ph = 1, 3ph = 1.73)		1.73
f-Factor		19.69889667
Multiplier "M" = 1/(1+f)		0.048311754
Line to Line RMS Fault at XFMR-HSE SECONDARY FEEDER		3361.975307 Amps

Calculation for Fault Value at PANEL HSEL

Conductor		
Starting Fault Value at XFMR-HSE SECONDARY...	===>	3361.98 Amps
Wire Size 250 kcmil		
Conductor type (AL=Alum, CU=Copper)		AL
Conduit type (S=Steel, P=PVC)		S
Z /1000' @ .85pf (NEC Table 9)		0.1
No. of Parellel Runs		1
Distance (Feet)		5
Voltage (L-L)		208
Phase (1ph = 2, 3ph = 1.73)		1.73
f-Factor		0.013981
Multiplier "M" = 1/(1+f)		0.986211
Line to Line RMS Fault at PANEL HSEL		**3,315.62 Amps**

SWITCHBOARD: MDS-A

LOCATION: MERCANTILE 4 **VOLTAGE:** 480Y/277V.3Ø4W.
MAIN DEVICE: MAIN CB **AIC RATING:** 42,000 AMPS SYMMETRICAL
BUS AMPS: 2000 **SPECIAL:**

MAIN SECTION

C.T. COMPARTMENT: CURRENT TRANSFORMER, POTENTIAL TRANSFORMER
CUSTOMER POWER QUALITY METER

MAIN DEVICE

FRAME	POLES	FUSE	SPECIAL	DESCRIPTION/NAMEPLATE
2000	3			

DISTRIBUTION SUMMARY	CONN. LOAD
BLDG A - "MDS" 38"x28" DIST...	288048 VA

DISTRIBUTION SECTION No. 1

CKT	FRAME	POLES	FUSE		A	B	C	DESCRIPTION/NAMEPLATE	NOTES
1	200 A	3	200		...	...	...	PANEL HSEH-A	
2	--	--	--	--	...			SPACE	--
3	--	--	--	--	...			SPACE	--
4	--	--	--	--	...			SPACE	--
5	--	--	--	--	...			SPACE	--
6	--	--	--	--	...			SPACE	--
7	--	--	--	--	...			SPACE	--
8	--	--	--	--	...			SPACE	--
9	--	--	--	--	...			SPACE	--
10	--	--	--	--	...			SPACE	--
11									
12									

LOAD SUMMARY

SWBD LOAD	CONN. LOAD
BLDG A - "MDS" 38"x28" MAIN...	288048 VA

LOAD CLASSIFICATION	CONNECTED	DEMAND	ESTIMATED	PANEL TOTALS	
Other	300 VA	100.00%	300 VA		
RCPT	5190 VA	100.00%	5190 VA		
MTR	33254 VA	125.00%	41568 VA		
SPEC	244420 VA	100.00%	244420 VA		
HEAT	3120 VA	100.00%	3120 VA	**CONN. LOAD:**	288084 VA
LTG	1800 VA	125.00%	2250 VA	**EST. DEMAND LOAD:**	296848 VA
				CONN. CURRENT:	347 A
				EST. DEMAND...	357 A

NOTES:

PANELBOARD: HSEH-A

LOCATION: MERCANTILE 4 **VOLTAGE:** 480Y/277 V. 3 ø 4 W.
MOUNTING: SURFACE NEMA 1 **A.I.C. RATING:** 14,000 AMPS SYMMETRICAL
MAIN DEVICE: 200 A MLO **SPECIAL:**
BUS AMPS: 200 AMPS

LOAD DESCRIPTION	BKR	P	CKT	PHASE A kVA		PHASE B kVA		PHASE C kVA		CKT	P	BKR	LOAD DESCRIPTION
			1	3.3	0.3					2	1	20 A	LTG - EXIT & ELECTRICAL ROOM (MAIN)
RTU-A5	20 A	3	3			3.3	0.1			4	1	20 A	LTG - EXIT & ELEVATOR ROOM (MEZZANINE)
			5					3.3	0.0	6	--	--	SPACE
			7	3.9	10.8					8			
RTU-A4	20 A	3	9			3.9	10.8			10	3	50 A	RTU-A6
			11					3.9	10.8	12			
			13	7.2	12.7					14			
RTU-A3	30 A	3	15			7.2	12.7			16	3	50 A	RTU-A7
			17					7.2	12.7	18			
			19	3.0	12.7					20			
RTU-A2	20 A	3	21			3.0	12.7			22	3	50 A	RTU-A8
			23					3.0	12.7	24			
			25	6.1	10.8					26			
RTU-A10	30 A	3	27			6.1	10.8			28	3	50 A	RTU-A9
			29					6.1	10.8	30			
			31	7.2	3.6					32			
RTU-A11	30 A	3	33			7.2	3.6			34	3	20 A	RTU-A1
			35					7.2	3.6	36			
			37	11.1	3.7					38			
ELEVATOR	50 A	3	39			11.1	3.7			40	3	100 A	BLDG A - T1 - 75 KVA XFMR
			41					11.1	2.6	42			
	TOTAL LOAD:			97 kVA		96 kVA		95 kVA					
	TOTAL AMPS:			349 A		348 A		344 A					

LOAD CLASSIFICATION	CONNECTED	DEMAND	ESTIMATED	PANEL TOTALS	
Other	300 VA	100.00%	300 VA		
RCPT	5190 VA	100.00%	5190 VA	**CONNECTED LOAD:**	288084 VA
MTR	33254 VA	125.00%	41568 VA	**ESTIMATED DEMAND:**	296848 VA
SPEC	244420 VA	100.00%	244420 VA	**CONNECTED CURRENT:**	347 A
HEAT	3120 VA	100.00%	3120 VA	**EST. DEMAND CURRENT:**	357 A
LTG	1800 VA	125.00%	2250 VA		

NOTES:

PANELBOARD: HSEL-A

LOCATION: MERCANTILE 4 **VOLTAGE:** 208Y/120 V. 3 ø 4 W.
MOUNTING: SURFACE NEMA 1 **A.I.C. RATING:** 10,000 AMPS SYMMETRICAL
MAIN DEVICE: 200 A MAIN CB **SPECIAL:**
BUS AMPS: 200 AMPS

LOAD DESCRIPTION	BKR	P	CKT	PHASE A kVA		PHASE B kVA		PHASE C kVA		CKT	P	BKR	LOAD DESCRIPTION
REC - EXTERIOR	20 A	1	1	0.7	0.7					2	1	20 A	REC - HOLIDAY LTG
REC (DED) - TELE/DATA	20 A	1	3			0.4	0.9			4	1	20 A	REC - HOLIDAY LTG
REC - ELECTRICAL HALL	20 A	1	5					0.2	1.6	6	2	20 A	EWH-A1
REC - ROOF TOP MAINT	20 A	1	7	0.7	1.6					8			
REC - ROOF TOP MAINT	20 A	1	9			0.7	0.0			10	2	20 A	HP-A1
SPARE	20 A	1	11					0.0	0.0	12			
SPARE	20 A	1	13	0.0	0.0					14	1	20 A	SPARE
SPARE	20 A	1	15			0.0	0.0			16	1	20 A	SPARE
SPARE	20 A	1	17					0.0	0.0	18	1	20 A	SPARE
SPARE	20 A	1	19	0.0	0.0					20	1	20 A	SPARE
SPARE	20 A	1	21			0.0	0.0			22	1	20 A	SPARE
SPARE	20 A	1	23					0.0	0.0	24	1	20 A	SPARE
SPARE	20 A	1	25	0.0	0.0					26	1	20 A	SPARE
SPARE	20 A	1	27			0.0	0.0			28	1	20 A	SPARE
SPARE	20 A	1	29					0.0	0.0	30	1	20 A	SPARE
SPARE	20 A	1	31	0.0	0.0					32	1	20 A	SPARE
SPARE	20 A	1	33			0.0	0.0			34	1	20 A	SPARE
SPARE	20 A	1	35					0.0	0.0	36	1	20 A	SPARE
SPARE	20 A	1	37	0.0	0.0					38	1	20 A	SPARE
SPARE	20 A	1	39			0.0	1.7			40	2	30 A	PANEL ELEV
SPARE	20 A	1	41					0.0	0.9	42			
	TOTAL LOAD:			4 kVA		4 kVA		3 kVA					
	TOTAL AMPS:			32 A		32 A		22 A					

LOAD CLASSIFICATION	CONNECTED	DEMAND	ESTIMATED	PANEL TOTALS	
RCPT	5190 VA	100.00%	5190 VA		
HEAT	3120 VA	100.00%	3120 VA	**CONNECTED LOAD:**	10050 VA
LTG	1740 VA	125.00%	2175 VA	**ESTIMATED DEMAND:**	10485 VA
				CONNECTED CURRENT:	28 A
				EST. DEMAND CURRENT:	29 A

NOTES:

GENERAL NOTES

1. ALL CONDUCTORS ARE #12 AWG CU UNLESS NOTED OTHERWISE. MC FEEDER CAN BE USED WHERE APPROPRIATE AND AT CONTRACTOR'S DISCRETION. MC FEEDER SHALL BE SIZED PER NEC REQUIREMENTS.
2. RISER DIAGRAM IS NOT REPRESENTATIVE OF ACTUAL SWITCHBOARD LAYOUT. SEE ELECTRICAL ROOMS OR PANEL LOCATIONS (SHEET E2.01-E2.08) AND PANEL SCHEDULES (SHEET E5.02-E5.03) FOR PHYSICAL LAYOUT WITH RESPECT TO ACTUAL MANUFACTURED AND POTENTIAL INSTALLED CONDITIONS.
3. EQUIPMENT SHOWN BOLD IS NEW.
4. EQUIPMENT SHOWN DASHED IS EXISTING.
5. FIELD VERIFY EXISTING CONDITIONS PRIOR TO CONSTRUCTION.
6. ALL SWITCHBOARDS AND PANELBOARDS SUPPLIED BY A FEEDER SHALL BE MARKED TO INDICATE THE DEVICE OR EQUIPMENT WHERE THE POWER SUPPLY ORIGINATES PER NEC 408.4(B).
7. FEEDERS ARE ALUMINUM WITH THHN/THWN INSULATION.
8. PROVIDE PULL BOXES AS REQUIRED BY THE NEC.
9. SHORT CIRCUIT CURRENTS LESS THAN 10,000 AIC FOR 208V PANELS AND 14,000 AIC FOR 480V PANELS ARE NOT SHOWN.
10. THE ONE-LINE DIAGRAM IS DIAGRAMMATIC AND DOES NOT SHOW THE ACTUAL ROUTING OF RACEWAYS.
11. FOR TWO SECTION PANELS PROVIDE FULL SIZE FEEDER CONNECTIONS FROM SECTION 1 TO SECTION 2.
12. NOT ALL CIRCUIT BREAKERS ARE SHOWN, REFER TO PANEL AND SWITCHBOARD SCHEDULES FOR OTHER LOADS SERVED, AND SPARE CIRCUIT BREAKERS.

FLAG NOTES

1. CONCRETE HOUSEKEEPING PAD UNDER TRANFORMER(S) /SWITCHBOARD(S)/ GENERATOR(S) TO BE PROVIDED BY OTHERS. REFER TO STRUCTURAL PLANS FOR INSTALLATION DETAILS.
2. CT ENCLOSURE/TERMINAL CABINET PER POWER COMPANY REQUIREMENTS.
3. INSTALL FEEDER FROM TRANSFORMER SECONDARY TO MAIN BREAKER IN SWITCHBOARD/PANEL (NOT TO EXCEED 25'-0" PER NEC 240.21(C)(6).
4. TYPICAL HOUSE PANEL: PROVIDE AND INSTALL (1) 2" CONDUIT AND 200A FEEDER TO 480V/3P HOUSE PANEL FROM MAIN SWITCHGEAR OR SWITCHBOARD. METER PROVIDED BY PSE UTILITY
5. (1) 1-1/2" EMT CONDUIT TO BE PROVIDED FROM ELECTRICAL ROOM AND TO BE CAPPED AT ROOF.

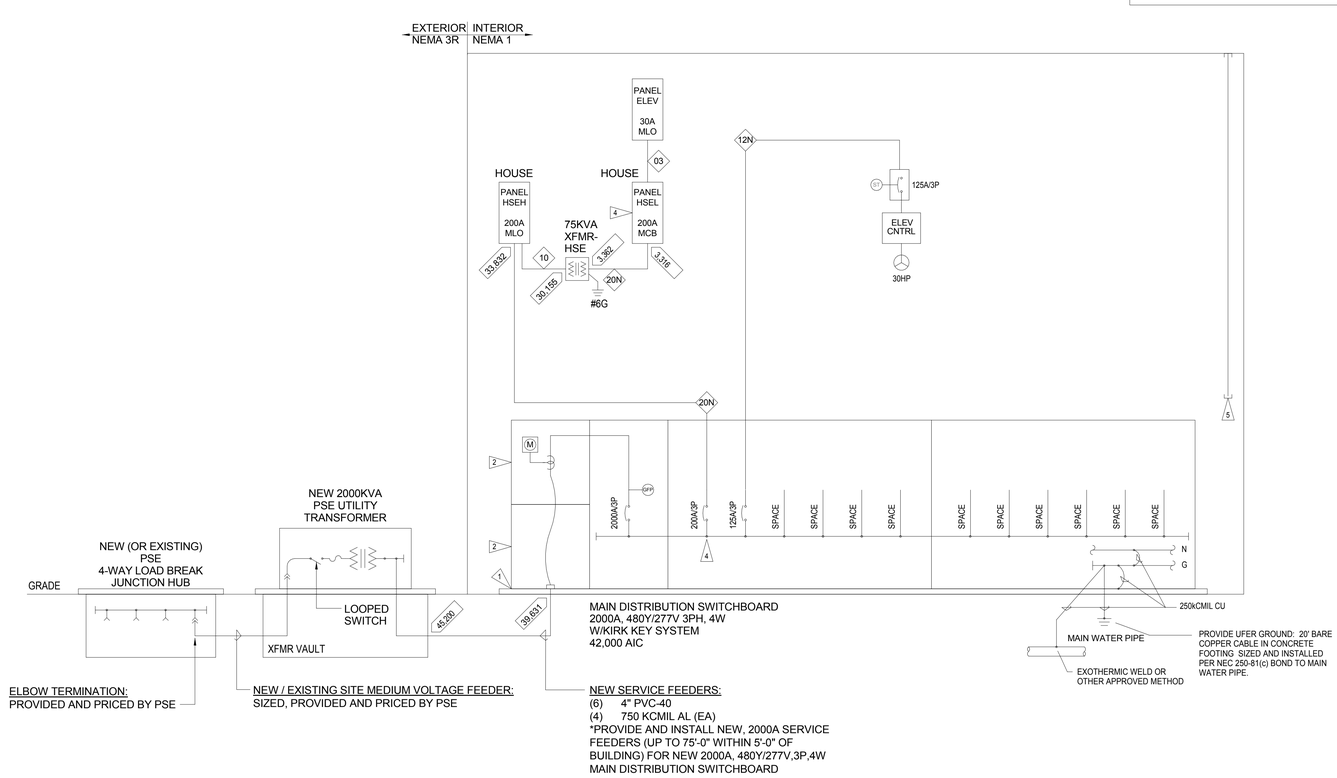

ONE-LINE RISER DIAGRAM

12" = 1'-0"

SEANTAC ELECTRIC INC.
7056 SOUTH 220TH STREET
KENT, WA 98032
PHONE (253) 872-6553
FAX (253) 872-4112
www.seatacelectric.com

THE VILLAGE AT TOTEM LAKE - BLDG A
KIRKLAND, WA 98034

No.	Description	Date

CENTERCAL PROPERTIES, LLC
1600 EAST FRANKLIN
EL SEGUNDO, CA 90245

ONE-LINE RISER DIAGRAM

PROJECT NUMBER	15115
DATE	04/27/2016
DRAWN BY	CM, IE, NP
CHECKED BY	CM

E5.01

SCALE 12" = 1'-0"

60% CD SET

C:\Users\iane\Documents\Totem Lake_Elec_Bldg_A_IanEdmunds.rvt

5/16/2016 3:35:07 PM

SWITCHBOARD: MDS-A

LOCATION: MERCANTILE 4 — **VOLTAGE:** 480Y/277V.3Ø4W.
MAIN DEVICE: MAIN CB — **AIC RATING:** 42,000 AMPS SYMMETRICAL
BUS AMPS: 2000 — **SPECIAL:**

MAIN SECTION

C.T. COMPARTMENT: CURRENT TRANSFORMER, POTENTIAL TRANSFORMER
CUSTOMER POWER QUALITY METER

MAIN DEVICE

FRAME	POLES	FUSE	SPECIAL	DESCRIPTION/NAMEPLATE
2000	3			

DISTRIBUTION SUMMARY	CONN. LOAD
BLDG A - "MDS" 38"x28" DIST...	288048 VA

DISTRIBUTION SECTION No. 1

CKT	FRAME	POLES	FUSE		A	B	C	DESCRIPTION/NAMEPLATE	NOTES
1	200 A	3	200		...	...	...	PANEL HSEH-A	
2	--	--	--	--	...			SPACE	--
3	--	--	--	--	...			SPACE	--
4	--	--	--	--	...			SPACE	--
5	--	--	--	--	...			SPACE	--
6	--	--	--	--	...			SPACE	--
7	--	--	--	--	...			SPACE	--
8	--	--	--	--	...			SPACE	--
9	--	--	--	--	...			SPACE	--
10	--	--	--	--	...			SPACE	--
11									
12									

LOAD SUMMARY

SWBD LOAD	CONN. LOAD
BLDG A - "MDS" 38"x28" MAIN...	288048 VA

LOAD CLASSIFICATION	CONNECTED	DEMAND	ESTIMATED	PANEL TOTALS	
Other	300 VA	100.00%	300 VA		
RCPT	5190 VA	100.00%	5190 VA		
MTR	33254 VA	125.00%	41568 VA		
SPEC	244420 VA	100.00%	244420 VA		
HEAT	3120 VA	100.00%	3120 VA	CONN. LOAD:	288084 VA
LTG	1800 VA	125.00%	2250 VA	EST. DEMAND LOAD:	296848 VA
				CONN. CURRENT:	347 A
				EST. DEMAND...	357 A

NOTES:

PANELBOARD: HSEH-A

LOCATION: MERCANTILE 4 — **VOLTAGE:** 480Y/277 V. 3 ø 4 W.
MOUNTING: SURFACE NEMA 1 — **A.I.C. RATING:** 14,000 AMPS SYMMETRICAL
MAIN DEVICE: 200 A MLO — **SPECIAL:**
BUS AMPS: 200 AMPS

LOAD DESCRIPTION	BKR	P	CKT	PHASE A KVA		PHASE B KVA		PHASE C KVA		CKT	P	BKR	LOAD DESCRIPTION
			1	3.3	0.3					2	1	20 A	LTG - EXIT & ELECTRICAL ROOM (MAIN)
RTU-A5	20 A	3	3			3.3	0.1			4	1	20 A	LTG - EXIT & ELEVATOR ROOM (MEZZANINE)
			5					3.3	0.0	6	--	--	SPACE
			7	3.9	10.8					8			
RTU-A4	20 A	3	9			3.9	10.8			10	3	50 A	RTU-A6
			11					3.9	10.8	12			
			13	7.2	12.7					14			
RTU-A3	30 A	3	15			7.2	12.7			16	3	50 A	RTU-A7
			17					7.2	12.7	18			
			19	3.0	12.7					20			
RTU-A2	20 A	3	21			3.0	12.7			22	3	50 A	RTU-A8
			23					3.0	12.7	24			
			25	6.1	10.8					26			
RTU-A10	30 A	3	27			6.1	10.8			28	3	50 A	RTU-A9
			29					6.1	10.8	30			
			31	7.2	3.6					32			
RTU-A11	30 A	3	33			7.2	3.6			34	3	20 A	RTU-A1
			35					7.2	3.6	36			
			37	11.1	3.7					38			
ELEVATOR	50 A	3	39			11.1	3.7			40	3	100 A	BLDG A - T1 - 75 KVA XFMR
			41					11.1	2.6	42			
	TOTAL LOAD:			97 kVA		96 kVA		95 kVA					
	TOTAL AMPS:			349 A		348 A		344 A					

LOAD CLASSIFICATION	CONNECTED	DEMAND	ESTIMATED	PANEL TOTALS	
Other	300 VA	100.00%	300 VA		
RCPT	5190 VA	100.00%	5190 VA	CONNECTED LOAD:	288084 VA
MTR	33254 VA	125.00%	41568 VA	ESTIMATED DEMAND:	296848 VA
SPEC	244420 VA	100.00%	244420 VA	CONNECTED CURRENT:	347 A
HEAT	3120 VA	100.00%	3120 VA	EST. DEMAND CURRENT:	357 A
LTG	1800 VA	125.00%	2250 VA		

NOTES:

PANELBOARD: HSEL-A

LOCATION: MERCANTILE 4 — **VOLTAGE:** 208Y/120 V. 3 ø 4 W.
MOUNTING: SURFACE NEMA 1 — **A.I.C. RATING:** 10,000 AMPS SYMMETRICAL
MAIN DEVICE: 200 A MAIN CB — **SPECIAL:**
BUS AMPS: 200 AMPS

LOAD DESCRIPTION	BKR	P	CKT	PHASE A KVA		PHASE B KVA		PHASE C KVA		CKT	P	BKR	LOAD DESCRIPTION
REC - EXTERIOR	20 A	1	1	0.7	0.7					2	1	20 A	REC - HOLIDAY LTG
REC (DED) - TELE/DATA	20 A	1	3			0.4	0.9			4	1	20 A	REC - HOLIDAY LTG
REC - ELECTRICAL HALL	20 A	1	5					0.2	1.6	6	2	20 A	EWH-A1
REC - ROOF TOP MAINT	20 A	1	7	0.7	1.6					8			
REC - ROOF TOP MAINT	20 A	1	9			0.7	0.0			10	2	20 A	HP-A1
SPARE	20 A	1	11					0.0	0.0	12			
SPARE	20 A	1	13	0.0	0.0					14	1	20 A	SPARE
SPARE	20 A	1	15			0.0	0.0			16	1	20 A	SPARE
SPARE	20 A	1	17					0.0	0.0	18	1	20 A	SPARE
SPARE	20 A	1	19	0.0	0.0					20	1	20 A	SPARE
SPARE	20 A	1	21			0.0	0.0			22	1	20 A	SPARE
SPARE	20 A	1	23					0.0	0.0	24	1	20 A	SPARE
SPARE	20 A	1	25	0.0	0.0					26	1	20 A	SPARE
SPARE	20 A	1	27			0.0	0.0			28	1	20 A	SPARE
SPARE	20 A	1	29					0.0	0.0	30	1	20 A	SPARE
SPARE	20 A	1	31	0.0	0.0					32	1	20 A	SPARE
SPARE	20 A	1	33			0.0	0.0			34	1	20 A	SPARE
SPARE	20 A	1	35					0.0	0.0	36	1	20 A	SPARE
SPARE	20 A	1	37	0.0	0.0					38	1	20 A	SPARE
SPARE	20 A	1	39			0.0	1.7			40	2	30 A	PANEL ELEV
SPARE	20 A	1	41					0.0	0.9	42			
	TOTAL LOAD:			4 kVA		4 kVA		3 kVA					
	TOTAL AMPS:			32 A		32 A		22 A					

LOAD CLASSIFICATION	CONNECTED	DEMAND	ESTIMATED	PANEL TOTALS	
RCPT	5190 VA	100.00%	5190 VA		
HEAT	3120 VA	100.00%	3120 VA	CONNECTED LOAD:	10050 VA
LTG	1740 VA	125.00%	2175 VA	ESTIMATED DEMAND:	10485 VA
				CONNECTED CURRENT:	28 A
				EST. DEMAND CURRENT:	29 A

NOTES:

SEANTAC ELECTRIC INC.
7056 SOUTH 220TH STREET
KENT, WA 98032
PHONE (253) 872-6553
FAX (253) 872-4112
www.seatacelectric.com

THE VILLAGE AT TOTEM LAKE - BLDG A
KIRKLAND, WA 98034

No.	Description	Date

CENTERCAL PROPERTIES, LLC
1600 EAST FRANKLIN
EL SEGUNDO, CA 90245

PANEL SCHEDULES

PROJECT NUMBER	15115
DATE	04/27/2016
DRAWN BY	CM, IE, NP
CHECKED BY	CM

E5.02

SCALE

60% CD SET

C:\Users\ianel\Documents\Totem Lake_Elec_Bldg_A_IanEdmunds.rvt

5/16/2016 3:35:07 PM

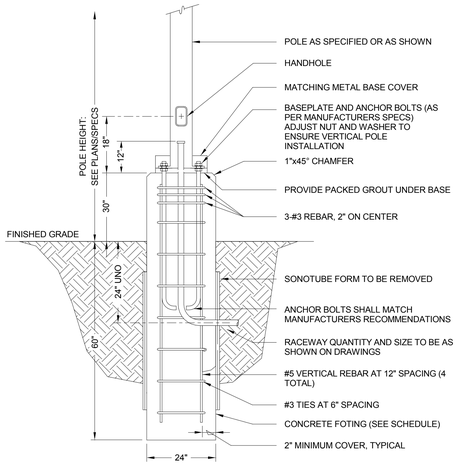

1 POLE BASE - GRADE - WITH 30" PEDESTAL
12" = 1'-0"

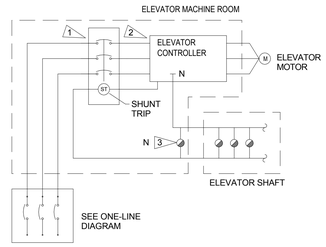

ELEVATOR SHUT DOWN CONTROL DETAIL
SCALE: NTS

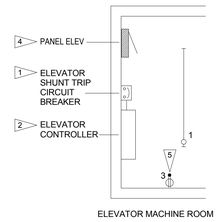

ELEVATOR MACHINE ROOM DETAIL
SCALE: NTS

ELEVATOR FLAG NOTES:

1. ELEVATOR SHUNT TRIP CIRCUIT BREAKER DISCONNECTING MEANS IN ELEVATOR MACHINE ROOM. FOR MULTIPLE ELEVATORS IN A SINGLE MACHINE ROOM SHUNT TRIP OF ANY ELEVATOR SHALL DISCONNECT POWER TO ALL ELEVATORS IN THAT ROOM. PROVIDE DEDICATED CIRCUIT(S) FOR OPERATION OF SHUNT TRIP BREAKER. PROVIDE SIGNAGE PER WASHINGTON ADMINISTRATIVE CODE FOR OPERATION OF ELEVATOR SHUNT TRIP BREAKER. SHUNT TRIP 120V POWER SHALL BE DERIVED FROM ONE OF TWO METHODS:
   - A UL LISTED SHUNT TRIP MAINLINE ASSEMBLY WITH INTEGRAL 120V CONTROL TRANSFORMER AND VISUAL INDICATION OF SHUNT TRIP POWER
   - A DEDICATED 120V ELEVATOR MACHINE ROOM PANEL CIRCUIT AND CORRESPONDING VISUAL INDICATION OF SHUNT TRIP POWER.
2. ELEVATOR CONTROLLER: PROVIDE FIRE ALARM SPEAKER CIRCUIT AND FIRE ALARM SYSTEM ELEVATOR RECALL SIGNAL AS REQUIRED.
3. HEAT DETECTORS: PROVIDE AUXILIARY N.O. CONTACT IN HEAT DETECTORS LOCATED IN ELEVATOR HOISTWAYS (WHERE REQ'D) AND IN ELEVATOR MACHINE ROOM. THESE DETECTORS AND ELEVATOR LOBBY FLOOR SMOKE DETECTORS SHALL ANNUNCIATE AS SEPARATE ZONE AND INITIATE ELEVATOR RECALL. ELEVATOR MACHINE ROOM HEAT DETECTOR SHALL BE TIED TO THE ELEVATOR SHUNT TRIP DISCONNECTING MEANS AND SHALL CUT POWER TO ELEVATOR DISCONNECT UPON ACTIVATION. HEAT DETECTORS SHALL BE 135° FIXED TEMPERATURE TYPE AND SHALL BE INSTALLED WITHIN 18" OF EACH SPRINKLER HEAD IN THE MACHINE ROOM AND HOISTWAY. MODIFY PROVISIONS AS REQUIRED TO MEET STATE ELEVATOR CODE.
4. PANEL ELEV: 30A 208V. PROVIDE 20A BREAKERS FOR SHUNT TRIP CONTROLS, ELEVATOR MACHINE ROOM AND PIT LIGHT/RECEPTACLE. PROVIDE 20A LOCK OPEN BREAKERS FOR CONTROL OF ELEVATOR CAB LIGHTS AND RECEPTACLES, VENTILATION POWER PER NEC 620-53. LOCATE PER ELEVATOR INSTALLER.
5. ELEVATOR MACHINE ROOM AND PIT LIGHT/RECEPT. RECEPTACLE TO BE DOWNSTREAM OF LIGHT. PROVIDE 120V BALLAST FOR INDICATED FIXTURE. SEE PANEL ELEV SCHEDULE FOR CIRCUIT(S).

2 ELEVATOR WASHINGTON STATE LOWRISE SOLUTION
12" = 1'-0"

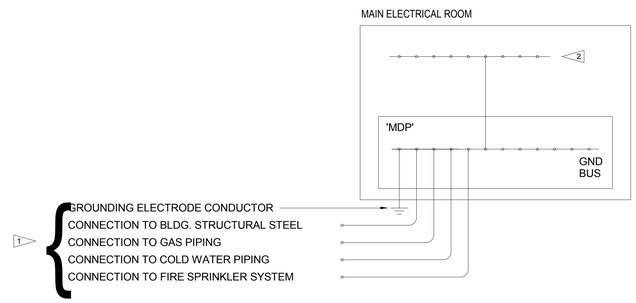

GENERAL NOTES:

1. GROUND TRANSFORMERS IN ELECTRICAL ROOMS TO GROUND BUS IN ROOM.

FLAG NOTES:

1. PROVIDE CONCRETE ENCASED GROUNDING ELECTRODE (UFER) CONSISTING OF 30' OF #3/0 BARE AL, INSTALLED PER NEC 250.52. PROVIDE SEPARATELY RUN BARE AL CONDUCTORS OF THE SAME SIZE CONNECTED TO THE COLD WATER PIPING , ABOVE GROUND GAS PIPING, AND BUILDING METAL FRAMING PER NEC250.
2. PROVIDE INTERSYSTEM BONDING BUS WITH #6 AL TO MAIN SERVICE GROUND BUS IN ACCORDANCE WITH NEC 250.94.

3 GROUNDING ONE-LINE DIAGRAM
12" = 1'-0"

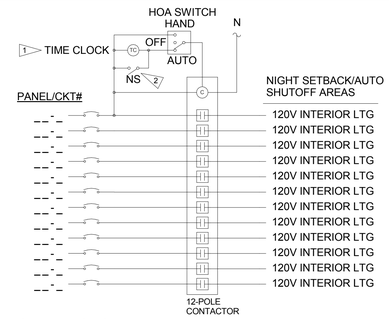

GENERAL NOTES:

1. ALL DAYLIGHT AREAS IN THIS PROJECT ARE ROOMS LESS THAN 300SF, NO DAYLIGHT CONTROLS REQUIRED.
2. ROUTE UNSWITCHED HOT CIRCUIT TO ALL BATTERY EGRESS LIGHTS AS INDICATED.

FLAG NOTES:

1. PROVIDE SINGLE-CHANNEL 24 HOUR/7-DAY/HOLIDAY PROGRAMMABLE TIMECLOCK WITH BATTERY BACKUP, COMPLIANT WITH WASHINGTON STATE ENERGY CODE REQUIREMENTS. COORDINATE PROPER INPUT VOLTAGE.
2. PROVIDE SUITABLE NIGHT SETBACK CONTROL WITH FLICKER WARNING FUNCTION TO PROVIDE UP TO TWO HOUR OPERATION. PARAGON ET1100F OR EQUAL.
3. PROVIDE 4-SCENE PROGRAMMABLE LIGHTING CONTROLLER AND OCCUPANCY SENSOR IN LIEU OF AUTOMATIC DAYLIGHT CONTROLS PER WASHINGTON STATE ENERGY CODE REQUIREMENTS.

4 INTERIOR AUTOMATIC LIGHTING CONTROLS
12" = 1'-0"

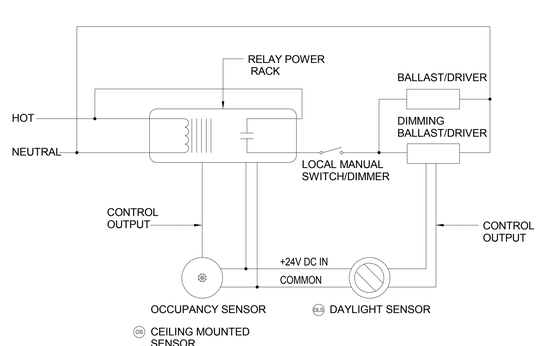

5 OCCUPANCY SENSOR WIRING DIAGRAM
12" = 1'-0"

TYPE 1

PANEL 'TBD'
208Y/120V 3PH 4W
FED FROM 'HD'
NORMAL BRANCH

FOR PANELBOARDS AND ATS

TYPE 2

PANEL 'TBD'
480/277V 3PH 4W
FED FROM UTILITY #1
NORMAL BRANCH

FOR SWITCHBOARDS AND TRANSFORMERS

GENERAL NOTES:

1. SECURE NAMEPLATE TO SURFACES.
2. NAMEPLATE TO BE 1/16" PHENOLIC PLASTIC LAMINATE WITH COLORS AS FOLLOWS "NORMAL BRANCH ": FACE TO BE BLACK, ENGRAVED LETTERS TO BE WHITE.

6 PANEL NAME IDENTIFICATION DETAIL
12" = 1'-0"

SEANTAC ELECTRIC INC.
7056 SOUTH 220TH STREET
KENT, WA 98032
PHONE (253) 872-6553
FAX (253) 872-4112
www.seatacelectric.com

THE VILLAGE AT TOTEM LAKE - BLDG A
KIRKLAND, WA 98034

No.	Description	Date

CENTERCAL PROPERTIES, LLC
1600 EAST FRANKLIN
EL SEGUNDO, CA 90245

ELECTRICAL DETAILS

PROJECT NUMBER	15115
DATE	04/27/2016
DRAWN BY	Author
CHECKED BY	Checker

E6.01

SCALE 12" = 1'-0"

60% CD SET

C:\Users\sean\Documents\Totem Lake_Elec_Bldg_A_JanEdmunds.rvt

5/16/2016 3:35:08 PM

ABBREVIATIONS

ø	DIAMETER
ABV	ABOVE
AD	ACCESS DOOR
AFF	ABOVE FINISHED FLOOR
AHU	AIR HANDLING UNIT
AP	ACCESS PANEL
BF	BELOW FLOOR
BOT	BOTTOM
CIP	CAST IN PLACE
CLG	CEILING
CONC	CONCRETE
CONN	CONNECTION
CW	COLD WATER
DIA	DIAMETER
DN	DOWN
DWG	DRAWING
EA	EACH
EQUIP	EQUIPMENT
FCO	FLOOR CLEANOUT
FF	FINISHED FLOOR
FLR	FLOOR
FOG	FATS, OILS AND GREASE
FT	FOOT OR FEET
FUT	FUTURE
GAL	GALLON
GALV	GALVANIZED
HP	HORSEPOWER
HT	HEIGHT
HVAC	HEATING, VENTILATION AND AIR-CONDITIONING
HW	HOT WATER
HWSFU	HOT WATER SUPPLY FIXTURE UNITS
IBC	INTERNATIONAL BUILDING CODE
ID	INSIDE DIAMTER
IE	INVERT ELEVATION
IMC	INTERNATIONAL MECHANICAL CODE
IN	INCHES
IN WG	INCHES WATER GAUGE
LBS	POUNDS
LIN FT	LINEAR FOOT OR FEET
MAX	MAXIMUM
MBH	1000 BRITISH THERMAL UNITS PER HOUR
MIN	MINIMUM
MOCP	MAX OVER CURRENT PROTECTION
MTD	MOUNTED
NO	NUMBER
N/A	NOT APPLICABLE
OD	OUTSIDE DIAMETER/DIMENSION
PH	PHASE
POC	POINT OF CONNECTION
PRESS	PRESSURE
PSI	POUNDS PER SQUARE INCH
RPBP	REDUCED PRESSURE BACKFLOW PREVENTER
RPM	REVOLUTIONS PER MINUITE
SOG	SLAB ON GRADE
SBC	SEATTLE BUILDING CODE
SEC	SEATTLE ENERGY CODE
SMC	SEATTLE MECHANICAL CODE
SL	SOUND LINED
SQ FT	SQUARE FOOT OR FEET
SS	STAINLESS STEEL
TDH	TOTAL DYNAMIC HEAD
TYP	TYPICAL
UNO	UNLESS NOTED OTHERWISE
UPC	UNIFORM PLUMBING CODE
VTR	VENT THROUGH ROOF
W	WATTS OR WIDTH
W/	WITH
W/O	WITHOUT
WCO	WALL CLEANOUT
WG	WATER GAUGE
WSEC	WASHINGTON STATE ENERGY CODE (AKA CHAPTER 51-11C WAC)
WSFU	WATER SUPPLY FIXTURE UNITS

PLUMBING – LEGEND

- DIRECTION OF FLOW
- SUPPLY OR RETURN ELBOW SECTION UP
- SUPPLY OR RETURN ELBOW SECTION DOWN
- SUPPLY OR RETURN TEE SECTION UP
- SUPPLY OR RETURN TEE SECTION DN
- EXISTING PIPING
- HOT WATER RECIRCULATION PIPING
- HOT WATER PIPNG
- COLD WATER PIPING
- SANITARY WASTE PIPING
- VENT PIPING
- WASTE BELOW GROUND
- RWL — RAINWATER LEADER
- ORWL — OVERFLOW RAINWATER LEADER
- GW — COMMERCIAL KITCHEN GREASE WASTE
- CD — CONDENSATE DRAIN
- NP — NON-POTABLE COLD WATER
- BALL VALVE
- GATE VALVE
- BUTTERFLY VALVE
- CIRCUIT SETTER
- CHECK VALVE
- RELIEF VALVE
- PRESSURE REDUCING VALVE
- REDUCED PRESSURE BACKFLOW PREVENTER
- FLOOR DRAIN
- ROOF DRAIN
- HOSE BIBB/WALL HYDRANT
- TP — TRAP PRIMER
- FLEXIBLE CONNECTION
- EXPANSION JOINT
- PORTABLE INSTRUMENT CONNECTION
- STRAINER
- UNION
- PLUG AND/OR CAP
- PRESSURE GAUGE
- THERMOMETER
- FLUSH CLEANOUT
- MAV — MANUAL AIR VENT
- AAV — AUTOMATIC AIR VENT

GENERAL – LEGEND

- FTU — EQUIPMENT TAG TYPE
- 1 — EQUIPMENT TAG NUMBER
- 1 / M-0 — DETAIL OR DIAGRAM NUMBER / SHEET NUMBER WHERE DETAIL/DIAGRAM SHOWN
- 1 / M-0 — SECTION LETTER / SHEET NUMBER WHERE SECTION IS SHOWN
- 1 — REVISION CLOUD AND CHRONOLOGICAL NUMBER
- DETAIL REFERENCE OUTLINE
- POINT OF CONNECTION TO EXISTING OR TO OTHERS' WORK
- 1 — KEY NOTE CALLOUT
- WORK TO BE REMOVED

COMPLETION AND COMMISSIONING FOR DOMESTIC HOT WATER SYSTEMS

COMMISSIONING OF MECHANICAL SYSTEMS AND CONTROLS SHALL BE PROVIDED AS REQUIRED IN ACCORDANCE WITH 2012 WSEC SECTION C408.2. COPIES OF ALL APPLICABLE SERVICE AND EQUIPMENT DATA, AND PROJECT DOCUMENTATION THAT RELATES, SHALL BE PROVIDED TO THE OWNER AND MADE AVAILABLE TO THE AUTHORITIES HAVING JURISDICTION (AHJS) WITHIN 90 DAYS OF RECEIPT OF THE CERTIFICATE OF OCCUPANCY INCLUDING:

1. PRELIMINARY COMMISSIONING REPORT AND OTHER RELATED REPORTS SUCH AS BALANCING, START-UP AND/OR PRESSURE TESTING DATA.
2. RECORD DRAWINGS DEPICTING FINAL INSTALLATION CONFIGURATIONS OF SYSTEMS AND EQUIPMENT.
3. OPERATION AND MAINTENANCE EQUIPMENT MANUALS INCLUDING: MANUFACTURER'S INFORMATION WITH SPECIFIC MODEL NUMBERS AND OPTIONS NOTED, CONTROLS DATA INCLUDING CALIBRATION AND SETPOINT INFORMATION, AND A SIMPLE NARRATIVE DESCRIPTION OF EACH SYSTEM.

IN ADDITION, TRAINING OF THE MAINTENANCE STAFF SHALL BE PROVIDED AS REQUIRED BY 2012 WSEC SECTION C408.1.4, INCLUDING REVIEW OF DOCUMENTATION, HANDS-ON DEMONSTRATION OF OPERATION AND START-UP PROCEDURES AS WELL AS A TRAINING COMPLETION REPORT.

WHOLE BUILDING AND COMMISSIONING OF SYSTEMS THAT ARE NOT INCLUDED IN THE MECHANICAL SCOPE SHALL BE PROVIDED IN ACCORDANCE WITH 2012 WSEC SECTION C408.1 BY OTHERS.

CODE COMPLIANCE NOTES

1. MECHANICAL PIPING, IF EXPOSED TO THE ENVIRONMENT, SHALL BE PROTECTED IN ACCORDANCE WITH 2012 WSEC SECTION C403.2.8.1 AND ALL PIPING SHALL BE INSULATED AS REQUIRED BY 2012 WSEC C403.2.8 AS FOLLOWS:

FLUID OPERATING TEMPERATURE (°F)	PIPE SIZE (INCHES)	MINIMUM INSULATION THICKNESS (INCHES)
105–140	<1-1/2	1
105–140	1-1/2 AND LARGER	1-1/2

2. CLEANOUTS SHALL BE LOCATED IN HORIZONTAL WASTE PIPING AS REQUIRED BY 2012 UPC SECTION 707.4, INCLUDING ONE AT EACH UPPER TERMINAL, EACH CHANGE OF DIRECTION THAT IS GREATER THAN 135° AND IN RUNS GREATER THAN 100 FEET IN LENGTH.
3. FIXTURES LOCATED ON A FLOOR LEVEL THAT IS BELOW THE NEXT UPSTREAM MANHOLE OR BELOW THE MAIN SEWER LEVEL SHALL BE PROVIDED WITH BACKWATER VALVES AS REQUIRED BY 2012 UPC SECTION 710.1.

GENERAL NOTES

1. COORDINATE ALL NEW WORK WITH STRUCTURE AND OTHER TRADES.
2. FIELD VERIFY UNIT LOCATIONS, DROPS AND POSITIONS.
3. ALL LINE VOLTAGE WORK SHALL BE BY ELECTRICIAN.
4. A 120-VOLT SERVICE RECEPTACLE SHALL BE LOCATED WITHIN 25' OF EACH PIECE OF EQUIPMENT. DISCONNECT SHALL BE BY ELECTRICAL CONTRACTOR.
5. PIPE AND DUCT DIMENSIONS SHOWN ARE NOMINAL SIZES.
6. COORDINATE ALL PIPING AND VENTING WITH BELOW GRADE FOUNDATIONS, STRUCTURE, FIRE PROTECTION AND OTHER TRADES.
7. SANITARY WASTE PIPING SHALL BE INSTALLED AT 1/4" PER FOOT SLOPE AWAY FROM FIXTURES UNLESS SHOWN AS OTHERWISE.
8. MAINTAIN 15'-0" MINIMUM DISTANCE BETWEEN OSA INTAKES AND PLUMBING VENTS, EXHAUST AND COMBUSTION AIR OUTLETS.
9. ROOF DRAIN BODIES AND RAINWATER LEADERS SHALL BE INSULATED WITHIN 10' OF THE ROOF DRAINS.

VICINITY MAP

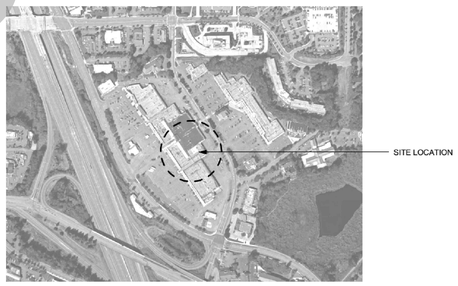

LEGAL DESCRIPTION

XXX

BUILDING OWNER

CENTERCAL PROPERTIES, INC.
1600 EAST FRANKLIN AVENUE
EL SEGUNDO, CA 90245
(310) 563-6900

CONTACT: RICK BEASON OR PATRICK BURNS

BUILDING INFORMATION

ZONING:	COMMERCIAL TL-2
CONSTRUCTION TYPE:	III-A, FULLY SPRINKLERED
OCCUPANCY TYPE:	M – MERCHANTILE
CLIMATE ZONE:	4C KING COUNTY

GREASE INTERCEPTOR SCHEDULE – BUILDING A

TAG	MANUFACTURER AND MODEL	APPLICATION	MAX DFU	MAX GPM	MIN CAPACITIES (GAL) LIQUID	GREASE	CONNECTIONS (INCHES) INLET	OUTLET	VENT	WEIGHT LBS	NOTES
GI-1	OLDCASTLE PRECAST	COMMERCIAL KITCHEN	–	–	3,000	VERIFY	6	6	3	–	1, 2

NOTES:
1. INFORMATION IS PROVIDED FOR REFERENCE ONLY, REFER TO CIVIL DRAWINGS FOR FINAL SELECTIONS AND DESIGNS.
2. PROVIDE WITH HIGHWAY RATED COVER FOR INSTALLATION IN THE DRIVE AISLE.

PLUMBING SCOPE – BUILDING A

SHELL AND CORE PLUMBING WORK TO SUPPORT THE NEW CONSTRUCTION INCLUDING COMMON AREA SERVICES AND CONSULTING FOR ANTICIPATED FUTURE TENANT IMPROVEMENTS, AS FOLLOWS:

- SCHEDULE 40 PVC DRAIN, WASTE AND VENT PIPING WITH 6" MINIMUM WASTE SERVICE TO EACH BUILDING AND 4" MINIMUM WASTE SERVICE TO EACH TENANT
- TYPE K COPPER UNDERGROUND DOMESTIC WATER PIPING WITH 3" MINIMUM SERVICE TO EACH BUILDING AND 1-1/2" MINIMUM SERVICE TO EACH TENANT
- TYPE L COPPER ABOVE GROUND DOMESTIC WATER PIPING WITH 1" MINIMUM INSULATION PER THE OWNER'S CONSTRUCTION STANDARDS
- RECESSED HOSE BIBBS AT EXTERIOR WALLS AND AT ROOF
- CAST IRON ROOF AND CANOPY DRAINS WITH SCHEDULE 40 PVC RAINWATER LEADERS

AND INCLUDING ALL NECESSARY FITTINGS, VALVES AND RELATED ACCESSORIES TO PROVIDE FOR FUTURE TENANT CONNECTIONS.

PLUMBING FIXTURES SCHEDULE – BUILDING A

TAG	DESCRIPTION	LOCATION	CONNECTION SIZES CW	HW	WASTE	VENT	ACCESSORIES/REMARKS	NOTES
DN-1	DOWNSPOUT NOZZLE	EXTERIOR WALLS	–	–	4	–	ALL PLAIN BRONZE BODY "COWS TONGUE"	1, 2
HB-1	HOSE BIBB	EXTERIOR WALLS	1/2	–	–	–	FREEZELESS WITH BACKFLOW PREVENTION FEATURE AND AUTO DRAIN	1, 2, 3
OD-1	ROOF DRAIN	ROOF	–	–	3	–	COMBINATION PRIMARY AND OVERFLOW WITH LOW PROFILE DOMES	1, 2
OD-2	ROOF DRAIN	ROOF	–	–	4	–	COMBINATION PRIMARY AND OVERFLOW WITH LOW PROFILE DOMES	1, 2
RD-1	ROOF DRAIN	ROOF	–	–	3	–	8"ø ROOF DRAIN WITH LOW SILHOUETTE DOME	1, 2

NOTES:
1. EQUIPMENT MAY BE SUBSTITUTED FOR EQUAL OR BETTER MANUFACTURER. REFER TO EQUIPMENT SUBMITTALS FOR FINAL SELECTIONS.
2. REFER TO ARCHITECTURAL PLANS FOR FINAL FIXTURE LOCATIONS AND TO ARCHITECTURAL ELEVATIONS FOR MOUNTING HEIGHTS.
3. PROVIDE A RECESSED MODEL WITH A LOCKING COVER.

DRAWING INDEX – BUILDING A

SHEET #	SHEET TITLE
P0001A	PLUMBING COVER SHEET
P0002A	PLUMBING DIAGRAMS AND CALCULATIONS
P1001A	BELOW GRADE PLAN – PLUMBING
P2101A	FIRST FLOOR PLAN – PLUMBING
P2102A	MEZZANINE FLOOR PLAN – PLUMBING
P2801A	ROOF PLAN – PLUMBING

NOT FOR CONSTRUCTION

COPYRIGHT NOTICE

THIS LAYOUT/DESIGN IS AN UNPUBLISHED WORK, AND MERIT MECHANICAL HEREBY RESERVES ITS COMMON LAW RIGHT, PURSUANT TO TITLE 17 SECTION 2 OF THE USA CODE TO PREVENT UNAUTHORIZED COPYING, PUBLICATION OR USE OF THIS DESIGN, AND TO OBTAIN DAMAGES THEREFORE.

THE VILLAGE AT TOTEM LAKE
BUILDING A - LOWER MALL

KIRKLAND, WASHINGTON 98034

COMFORT SYSTEMS USA
Merit Mechanical
9630 153RD AVENUE NE
REDMOND, WA 98052
(425) 883-9224
WA LICENSE: MERITM163CM
WWW.MERITMECHANICAL.COM

REVISIONS
0. FOR REVIEW MAY 16, 2016

DESIGNED: DJH
CHECKED: MTS
DATE: 1-6-2016
JOB NUMBER: 115062
SHEET TITLE: **PLUMBING COVER SHEET**
SHEET NUMBER: P0001A

Merit Mechanical					*COMPUTATION SHEET*
Redmond, WA					
Job Name:	Retail Shell and Core	**Area Served:**	Whole Building - Public	**Date:**	March 27, 2016
Subject:	Plumbing Fixture Units	**Mark:**	Generic Building with 3" service	**Job No.:**	115062

FIXTURE UNITS

Fixture Number	Fixture Type	No. of Fixtures	WSFU [1]	Total WSFU	CW WSFU [2]	Total CW WSFU	HW WSFU [2]	Total HW WSFU	HW GPH [3]	Total HW GPH	Sewer FU Per Fixture	Total Sewer FU's
	PLUMBING FIXTURES											
	From 2012 UPC Tables											
	Bathtub or Combination Bath/Shower		4	0	3.00	0.00	3.00	0.00	30	0	2	0
	3/4" Bathtub Filler		10	0	10.00	0.00	7.50	0.00	30	0	2	0
	Bidet		1	0	0.75	0.00	-	-	-	-	1	0
	Clothes Washer	**4**	4	16	3.00	12.00	3.00	12.00	20	80	3	12
	Dental Unit, Cuspidor		1	0	0.75	0.00	0.75	0.00	-	-	1	0
OF	Dishwasher, Domestic	**8**	1.5	12	-	-	1.50	12.00	100	800	2	16
DF	Drinking Fountain or Water cooler	**20**	0.5	10	0.50	10.00	-	-	-	-	0.5	10
	Food Waste Grinder, Commercial		-	-	-	-	-	-	-	-	3	0
	Floor Drain, Emergency		-	-	-	-	-	-	-	-	0	0
	Floor Drain		-	-	-	-	-	-	-	-	2	0
HB	Hose Bibb, first one	**1**	2.5	2.5	2.50	2.50	-	-	-	-	-	-
HB	Hose Bibb, each additional	**10**	1	10	1.00	10.00	-	-	-	-	-	-
LV	Lavatory	**20**	1	20	0.75	15.00	0.75	15.00	6	120	1	20
	Lawn Sprinkler, each head		1	0	1.00	0.00	-	-	-	-	-	-
	Mobile Home, each		12	0	9.00	0.00	9.00	0.00	-	-	12	0
SK	Sink, Bar	**10**	2	20	1.50	15.00	1.50	15.00	10	100	2	20
	Sink, Clinic Faucet		3	0	2.25	0.00	2.25	0.00	20	0	6	0
	Sink, Clinic Flushometer valve		8	0	6.00	0.00	6.00	0.00	20	0	6	0
	Sink, Commercial with Food Waste		2	0	1.50	0.00	1.50	0.00	20	0	3	0
	Sink, Special Purpose		2	0	1.50	0.00	1.50	0.00	20	0	4	0
	Sink, Special Purpose		2	0	1.50	0.00	1.50	0.00	20	0	6	0
SK	Sink, Kitchen, Domestic	**10**	1.5	15	1.13	11.25	1.13	11.25	20	200	2	20
	Sink, Laundry		1.5	0	1.13	0.00	1.13	0.00	20	0	2	0
MS	Sink, Service or Mop Basin	**20**	3	60	2.25	45.00	2.25	45.00	20	400	3	60
	Sink, Wash up, each set of faucets		2	0	1.50	0.00	1.50	0.00	20	0	2	0
SH	Shower, per head	**5**	2	10	1.50	7.50	1.50	7.50	30	150	2	10
UR	Urinal, 1.0 GPF Flush Valve, 1st one	**1**	20	20	20.00	20.00	-	-	-	-	2	2
UR	Urinal, 1.0 GPF Flush Valve, 2nd one	**1**	15	15	15.00	15.00	-	-	-	-	2	2
UR	Urinal, 1.0 GPF Flush Valve, 3rd one	**1**	10	10	10.00	10.00	-	-	-	-	2	2
UR	Urinal, 1.0 GPF Flush Valve, 4th one	**1**	8	8	8.00	8.00	-	-	-	-	2	2
UR	Urinal, 1.0 GPF Flush Valve, each add	**5**	5	25	5.00	25.00	-	-	-	-	2	10
	Urinal, Flush Tank		2	0	2.00	0.00	-		-	-	2	0
	Wash fountain, Circular Spray		4	0	3.00	0.00	3.00	0.00	20	0	3	0
	Water Closet, 1.6 GPF Gravity Tank		2.5	0	2.50	0.00	-	-	-	-	4	0
	Water Closet, 1.6 GPF Flush Tank		2.5	0	2.50	0.00	-	-	-	-	4	0
WC	Water Closet, 1.6 GPF Flush Valve, 1st	**1**	40	40	40.00	40.00	-	-	-	-	4	4
WC	Water Closet, 1.6 GPF Flush Valve, 2nd	**1**	30	30	30.00	30.00	-	-	-	-	4	4
WC	Water Closet, 1.6 GPF Flush Valve, 3rd	**1**	20	20	20.00	20.00	-	-	-	-	4	4
WC	Water Closet, 1.6 GPF Flush Valve, 4th	**1**	15	15	15.00	15.00	-	-	-	-	4	4
WC	Water Closet, 1.6 GPF Flush Valve, add	**15**	10	150	10.00	150.00	-	-	-	-	4	60
	Water Closet, >1.6 GPF Gravity Tank		5.5	0	5.50	0.00	-	-	-	-	6	0
	TOTALS	**136.00**		**508.50**		**461.25**		**117.75**		**1,850**		**262**

1. Total load on the cold water service, 2012 UPC.
2. Cold and hot water fixture unit value for fixtures having both cold and hot water taken at 75% of the total listed value, 2012 UPC.
3. Values for hot water demand are taken from ASHRAE 2015 HVAC Applications, Chapter 50, Table 10, for Offices.

Total WSFU=	Meter size	Building Supply
508.50	(IN)	(IN)
Per 2012 UPC, max allowable length of 400' and available pressure >60 psi:	2	2 1/2
Per 2012 UPC, max allowable velocity of 8 feet per second:		3
Per 2012 UPC, minimum horizontal sewer size:		6

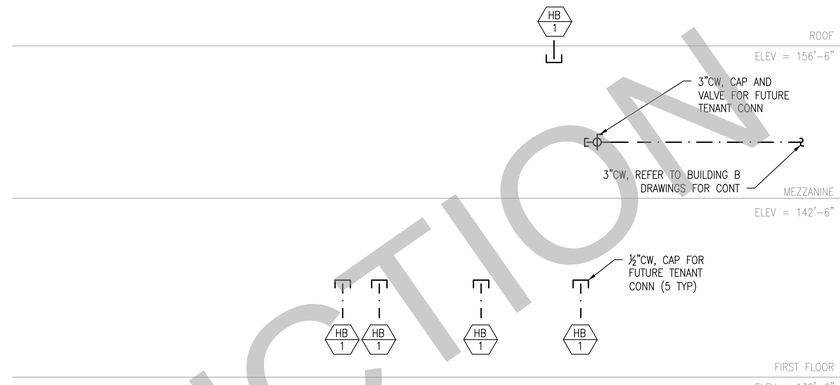

1 P0002A DOMESTIC WATER SCHEMATIC RISER DIAGRAM
SCALE: N/A (DIAGRAMS ARE REFLECTIVE OF THE ORIGINAL DESIGN AND MAY NOT BE REPRESENTATIVE OF AS-BUILT SYSTEMS)

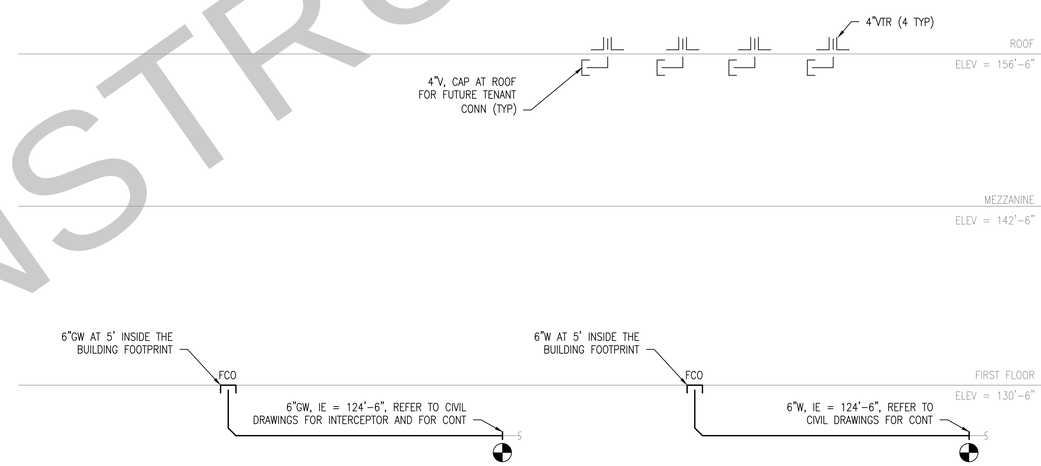

2 P0002A SANITARY WASTE AND VENT SCHEMATIC RISER DIAGRAM
SCALE: N/A (DIAGRAMS ARE REFLECTIVE OF THE ORIGINAL DESIGN AND MAY NOT BE REPRESENTATIVE OF AS-BUILT SYSTEMS)

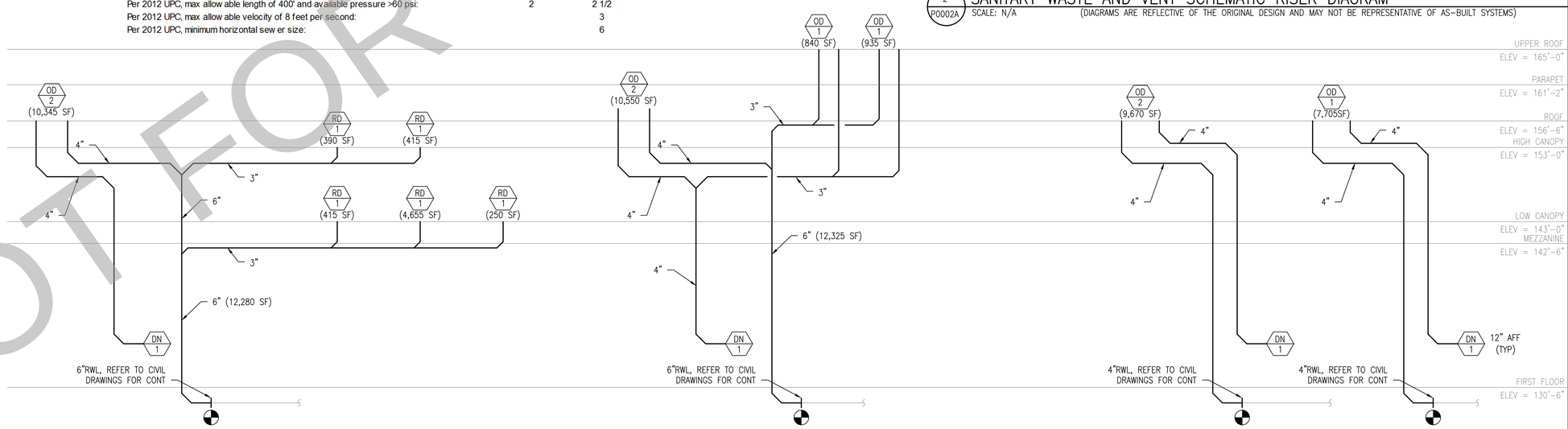

DIAGRAM NOTES:
1. RAINFALL RATES USED FOR ROOF DRAIN AND RAINWATER PIPE SIZES ARE BASED ON 1" PER HOUR PER 2012 UPC, TABLE D 1.1, FOR WASHINGTON STATE.

3 P0002A RAIN WATER SCHEMATIC RISER DIAGRAM
SCALE: N/A (DIAGRAMS ARE REFLECTIVE OF THE ORIGINAL DESIGN AND MAY NOT BE REPRESENTATIVE OF AS-BUILT SYSTEMS)

NOT FOR CONSTRUCTION

COPYRIGHT NOTICE
THIS LAYOUT/DESIGN IS AN UNPUBLISHED WORK, AND MERIT MECHANICAL HEREBY RESERVES ITS COMMON LAW RIGHT, PURSUANT TO TITLE 17 SECTION 2 OF THE USA CODE TO PREVENT UNAUTHORIZED COPYING, PUBLICATION OR USE OF THIS DESIGN, AND TO OBTAIN DAMAGES THEREFORE.

THE VILLAGE AT TOTEM LAKE
BUILDING A - LOWER MALL
KIRKLAND, WASHINGTON 98034

COMFORT SYSTEMS USA
Merit Mechanical
9630 153RD AVENUE NE
REDMOND, WA 98052
(425) 883-9224
WA LICENSE: MERITM163CM
WWW.MERITMECHANICAL.COM

REVISIONS
0. FOR REVIEW MAY 16, 2016

DESIGNED DJH
CHECKED MTS
DATE 1-6-2016
JOB NUMBER 115062
SHEET TITLE **DIAGRAMS & CALCULATIONS**
SHEET NUMBER P0002A

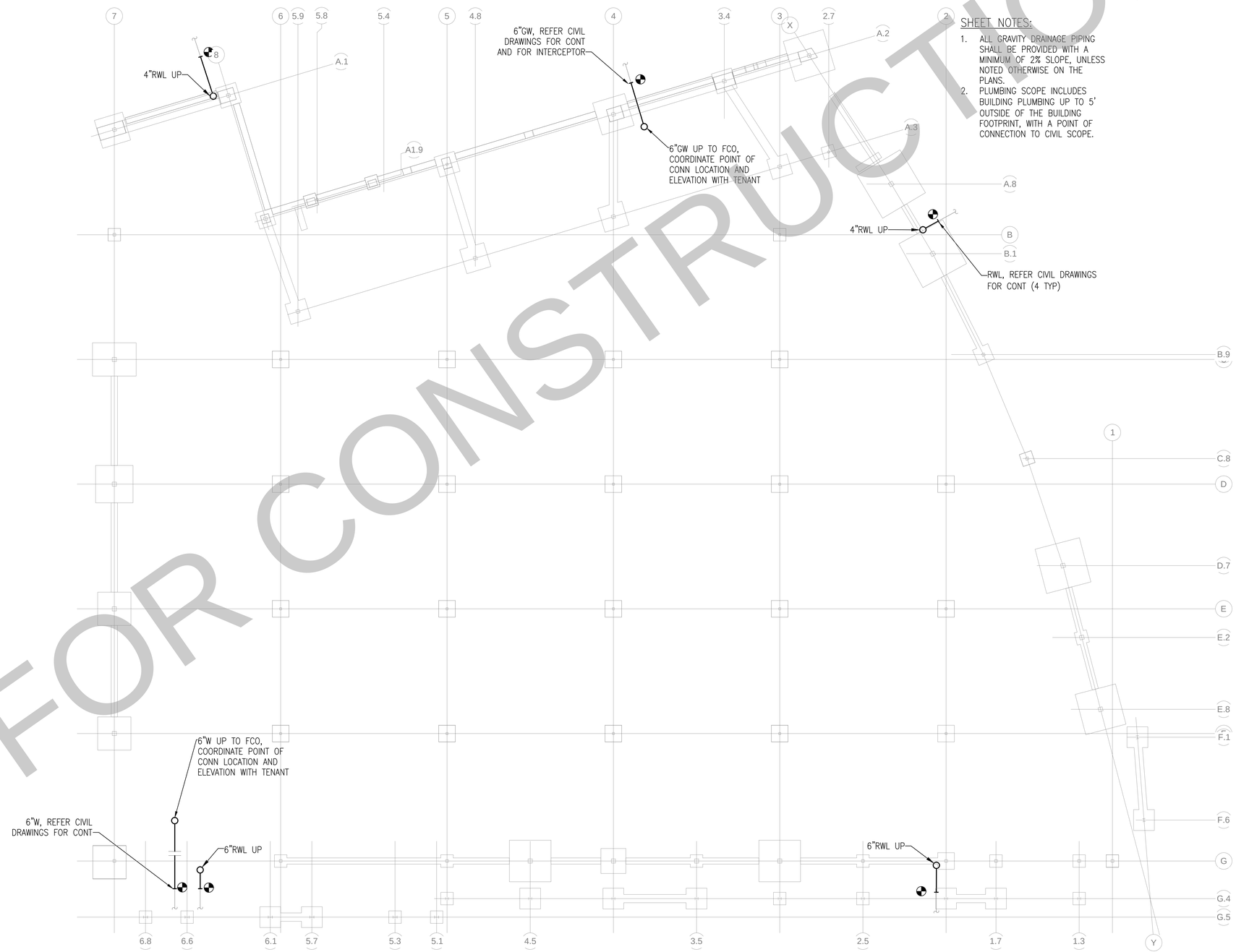

SHEET NOTES:

1. ALL GRAVITY DRAINAGE PIPING SHALL BE PROVIDED WITH A MINIMUM OF 2% SLOPE, UNLESS NOTED OTHERWISE ON THE PLANS.
2. PLUMBING SCOPE INCLUDES BUILDING PLUMBING UP TO 5' OUTSIDE OF THE BUILDING FOOTPRINT, WITH A POINT OF CONNECTION TO CIVIL SCOPE.

BELOW GRADE PLAN – PLUMBING

SCALE: 3/32" = 1' – 0"

0 5'-4" 10'-6" 21'-4"
SCALE: 3/32" = 1'-0"

NOT FOR CONSTRUCTION

COPYRIGHT NOTICE

THIS LAYOUT/DESIGN IS AN UNPUBLISHED WORK, AND MERIT MECHANICAL HEREBY RESERVES ITS COMMON LAW RIGHT, PURSUANT TO TITLE 17 SECTION 2 OF THE USA CODE TO PREVENT UNAUTHORIZED COPYING, PUBLICATION OR USE OF THIS DESIGN, AND TO OBTAIN DAMAGES THEREFORE.

THE VILLAGE AT TOTEM LAKE
BUILDING A - LOWER MALL

KIRKLAND, WASHINGTON 98034

COMFORT SYSTEMS USA
Merit Mechanical
9630 153RD AVENUE NE
REDMOND, WA 98052
(425) 883-9224
WA LICENSE: MERITM163CM
WWW.MERITMECHANICAL.COM

REVISIONS
0. FOR REVIEW MAY 16, 2016

DESIGNED
DJH

CHECKED
MTS

DATE
1-6-2016

JOB NUMBER
115062

SHEET TITLE
BELOW GRADE PLAN - PLUMB

SHEET NUMBER
P1001A

SHEET 3 OF 6

SHEET NOTES:

1. ALL GRAVITY DRAINAGE PIPING SHALL BE PROVIDED WITH A MINIMUM OF 2% SLOPE, UNLESS NOTED OTHERWISE ON THE PLANS.
2. PLUMBING SCOPE INCLUDES BUILDING PLUMBING UP TO 5' OUTSIDE OF THE BUILDING FOOTPRINT, WITH A POINT OF CONNECTION TO CIVIL SCOPE.

Confirm downspout connection locations and coordinate with LSM16-02038.

FIRST FLOOR PLAN – PLUMBING

SCALE: 3/32" = 1' – 0"

0 5'-4" 10'-6" 21'-4"
SCALE: 3/32" = 1'-0"

NOT FOR CONSTRUCTION

COPYRIGHT NOTICE

THIS LAYOUT/DESIGN IS AN UNPUBLISHED WORK, AND MERIT MECHANICAL HEREBY RESERVES ITS COMMON LAW RIGHT, PURSUANT TO TITLE 17 SECTION 2 OF THE USA CODE TO PREVENT UNAUTHORIZED COPYING, PUBLICATION OR USE OF THIS DESIGN, AND TO OBTAIN DAMAGES THEREFORE.

THE VILLAGE AT TOTEM LAKE
BUILDING A - LOWER MALL

KIRKLAND, WASHINGTON 98034

COMFORT SYSTEMS USA
Merit Mechanical
9630 153RD AVENUE NE
REDMOND, WA 98052
(425) 883-9224
WA LICENSE: MERITM163CM
WWW.MERITMECHANICAL.COM

REVISIONS
0. FOR REVIEW MAY 16, 2016

DESIGNED
DJH

CHECKED
MTS

DATE
1-6-2016

JOB NUMBER
115062

SHEET TITLE
FIRST FLOOR PLAN - PLUMB

SHEET NUMBER
P2101A

SHEET 4 OF 6

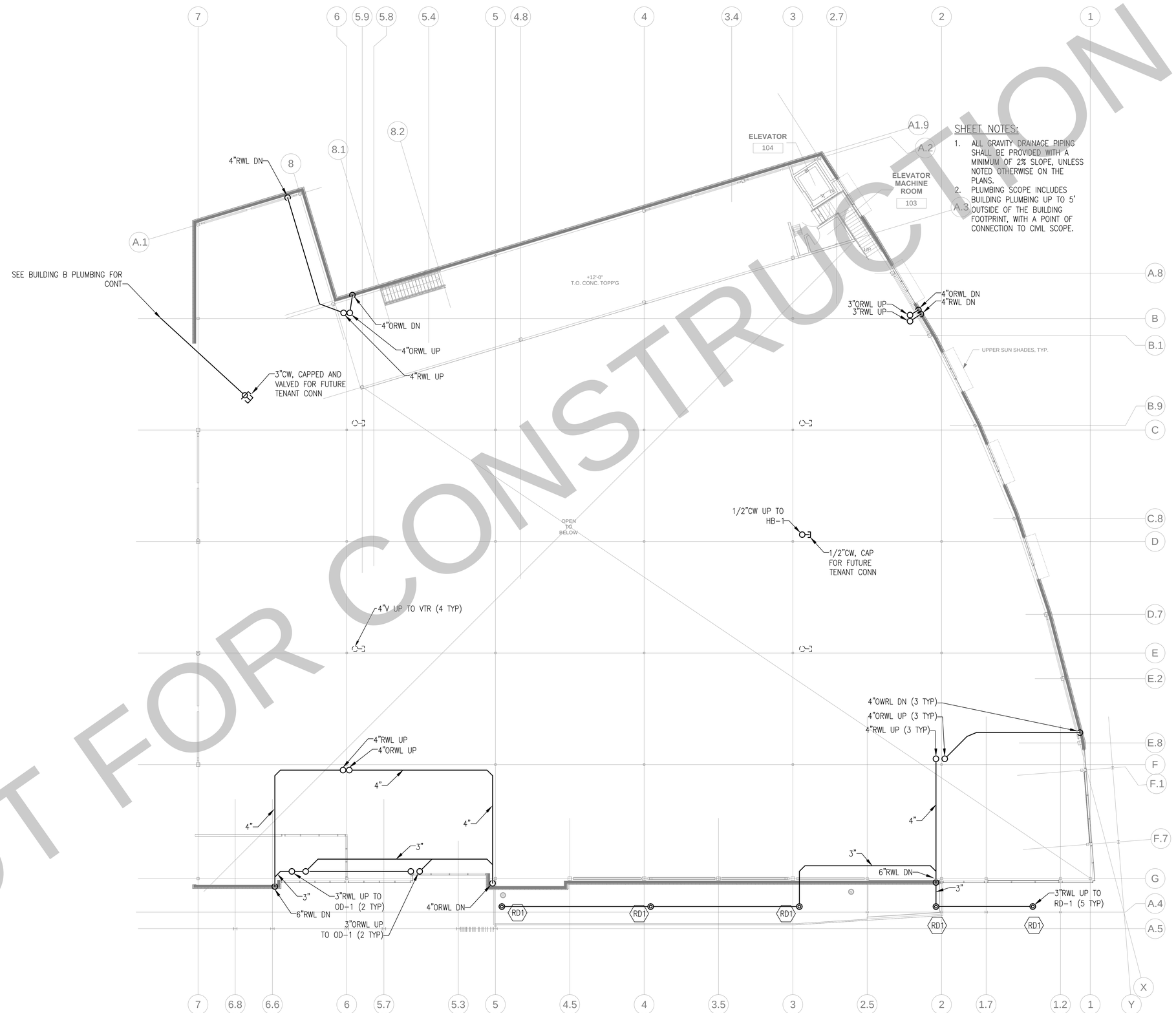

MEZZANINE PLAN – PLUMBING

SCALE: 3/32" = 1' – 0"

0 5'-4" 10'-6" 21'-4"
SCALE: 3/32" = 1'-0"

NOT FOR CONSTRUCTION

COPYRIGHT NOTICE

THIS LAYOUT/DESIGN IS AN UNPUBLISHED WORK, AND MERIT MECHANICAL HEREBY RESERVES ITS COMMON LAW RIGHT, PURSUANT TO TITLE 17 SECTION 2 OF THE USA CODE TO PREVENT UNAUTHORIZED COPYING, PUBLICATION OR USE OF THIS DESIGN, AND TO OBTAIN DAMAGES THEREFORE.

THE VILLAGE AT TOTEM LAKE
BUILDING A - LOWER MALL

KIRKLAND, WASHINGTON 98034

SHEET NOTES:

1. ALL GRAVITY DRAINAGE PIPING SHALL BE PROVIDED WITH A MINIMUM OF 2% SLOPE, UNLESS NOTED OTHERWISE ON THE PLANS.
2. PLUMBING SCOPE INCLUDES BUILDING PLUMBING UP TO 5' OUTSIDE OF THE BUILDING FOOTPRINT, WITH A POINT OF CONNECTION TO CIVIL SCOPE.

COMFORT SYSTEMS USA
Merit Mechanical
9630 153RD AVENUE NE
REDMOND, WA 98052
(425) 883-9224
WA LICENSE: MERITM163CM
WWW.MERITMECHANICAL.COM

REVISIONS
0. FOR REVIEW MAY 16, 2016

DESIGNED
DJH

CHECKED
MTS

DATE
1-6-2016

JOB NUMBER
115062

SHEET TITLE
MEZZANINE PLAN - PLUMB

SHEET NUMBER
P2102A

SHEET 5 OF 6

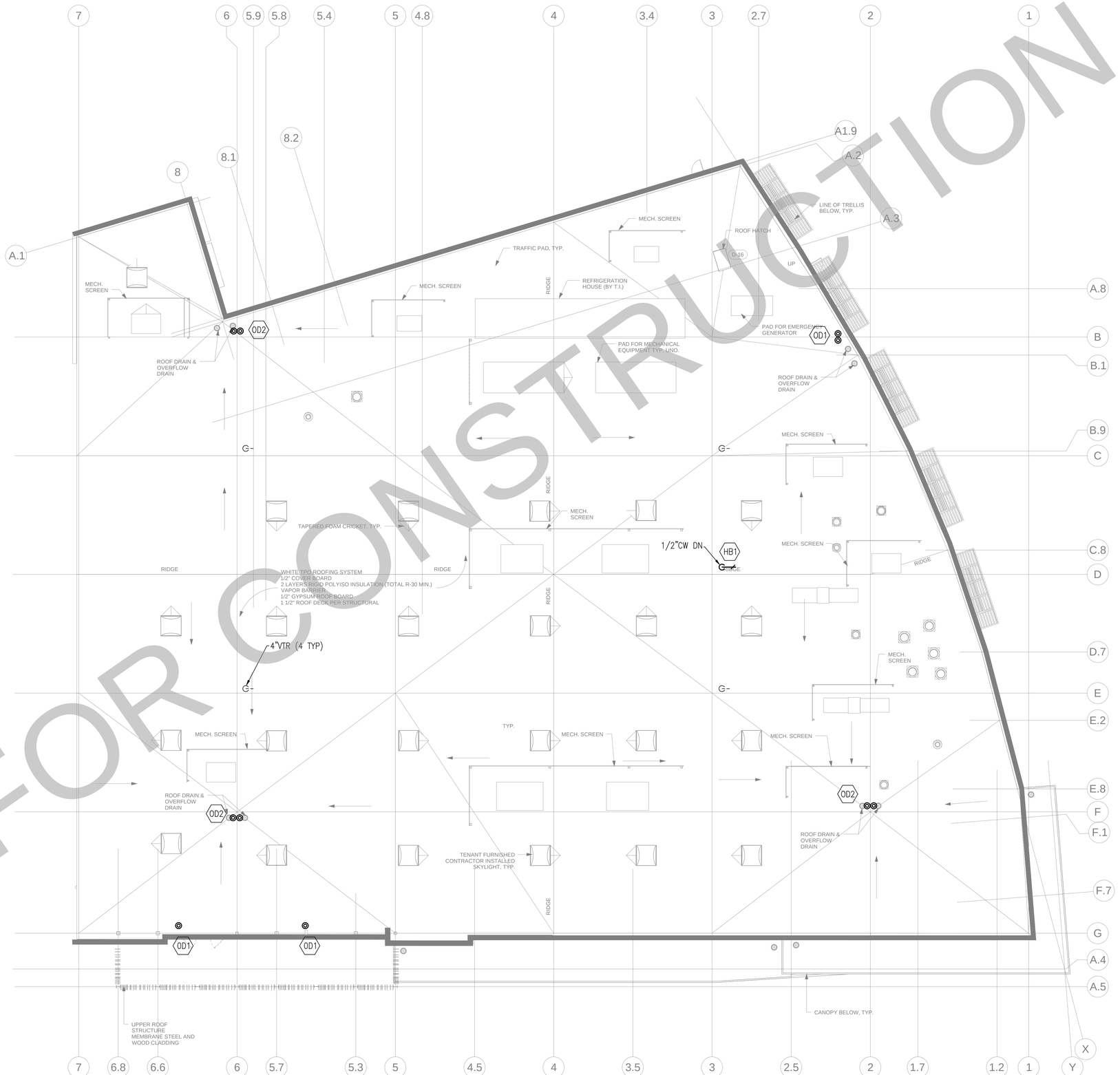

ROOF PLAN – PLUMBING

SCALE: 3/32" = 1' – 0"

0 5'-4" 10'-6" 21'-4"
SCALE: 3/32" = 1'-0"

NOT FOR CONSTRUCTION

COPYRIGHT NOTICE
THIS LAYOUT/DESIGN IS AN UNPUBLISHED WORK, AND MERIT MECHANICAL HEREBY RESERVES ITS COMMON LAW RIGHT, PURSUANT TO TITLE 17 SECTION 2 OF THE USA CODE TO PREVENT UNAUTHORIZED COPYING, PUBLICATION OR USE OF THIS DESIGN, AND TO OBTAIN DAMAGES THEREFORE.

THE VILLAGE AT TOTEM LAKE
BUILDING A - LOWER MALL

KIRKLAND, WASHINGTON 98034

COMFORT SYSTEMS USA
Merit Mechanical
9630 153RD AVENUE NE
REDMOND, WA 98052
(425) 883-9224
WA LICENSE: MERITM163CM
WWW.MERITMECHANICAL.COM

REVISIONS
0. FOR REVIEW MAY 16, 2016

DESIGNED
DJH

CHECKED
MTS

DATE
1-6-2016

JOB NUMBER
115062

SHEET TITLE
ROOF PLAN - PLUMBING

SHEET NUMBER
P2801A

SHEET 6 OF 6