CENTERCAL
PROPERTIES, LLC

The Village at Totem Lake - Building B

Kirkland, Washington

60% Progress Set
05/26/2016

Sheet List

Sheet Number	Sheet Name
0. GENERAL	
G0001	COVER PAGE
G1001	SHEET INDEX, CODE MATRIX, GEN. NOTES, ABBREV. & LEGENDS
G1101	MOUNTING HEIGHTS, DIAGRAMS & NOTES
G1200	BUILDING CODE ANALYSIS
G1201	EGRESS & FIRE SEPARATION DIAGRAMS - LEVEL 1
G1202	EGRESS & FIRE SEPARATION DIAGRAMS - LEVEL 2
3. ARCHITECTURAL	
A1001	SITE PLAN
A2101	OVERALL FIRST FLOOR PLAN
A2102	OVERALL SECOND FLOOR PLAN
A2201	OVERALL FIRST FLOOR SLAB EDGE PLAN
A2202	OVERALL SECOND FLOOR SLAB EDGE PLAN
A2311	FIRST FLOOR PLAN - NORTHEAST
A2312	FIRST FLOOR PLAN - NORTHWEST
A2313	FIRST FLOOR PLAN - SOUTHWEST
A2314	FIRST FLOOR PLAN - SOUTHEAST (LOADING DOCK)
A2320	SECOND FLOOR PLAN - NORTHEAST
A2321	SECOND FLOOR PLAN - NORTHWEST
A2322	SECOND FLOOR PLAN - SOUTHWEST
A2331	FIRST SLAB EDGE PLAN - NORTHEAST
A2332	FIRST SLAB EDGE PLAN - NORTHWEST
A2333	FIRST SLAB EDGE PLAN - SOUTHWEST
A2334	FIRST SLAB EDGE PLAN - SOUTHEAST
A2335	SECOND SLAB EDGE PLAN - NORTHEAST
A2336	SECOND SLAB EDGE PLAN - NORTHWEST
A2337	SECOND SLAB EDGE PLAN - SOUTHWEST
A2338	SECOND SLAB EDGE PLAN - SOUTHEAST
A2701	FIRST FLOOR REFLECTED CEILING PLAN
A2702	SECOND FLOOR REFLECTED CEILING PLAN
A2801	OVERALL ROOF PLAN
A2802	ROOF EDGE PLAN
A2803	LOADING DOCK CANOPY PLAN
A3001	EXTERIOR ELEVATIONS
A3002	EXTERIOR ELEVATIONS
A3011	ENLARGED ELEV, PART. PLAN & WALL SECTIONS - S. EAST A
A3012	ENLARGED ELEV, PART. PLAN & WALL SECTIONS - S. EAST B
A3013	ENLARGED ELEV, PART. PLAN & WALL SECTIONS - S. EAST C
A3014	ENLARGED ELEV, PART. PLAN & WALL SECTIONS - EAST A
A3015	ENLARGED ELEV, PART. PLAN & WALL SECTIONS - EAST B
A3016	ENLARGED ELEV, PART. PLAN & WALL SECTIONS - N. EAST A
A3017	ENLARGED ELEV, PART. PLAN & WALL SECTIONS - N. EAST B
A3018	ENLARGED ELEV, PART. PLAN & WALL SECTIONS - N. EAST C
A3020	ENLARGED ELEV, PART. PLAN & WALL SECTIONS - N. EAST D
A3021	ENLARGED ELEV, PART. PLAN & WALL SECTIONS - NORTH 1
A3022	ENLARGED ELEV, PART. PLAN & WALL SECTIONS - NORTH 2
A3023	ENLARGED ELEV, PART. PLAN & WALL SECTIONS - NORTH 3
A3024	ENLARGED ELEV, PART. PLAN & WALL SECTIONS - NORTH 4
A3025	ENLARGED ELEV, PART. PLAN & WALL SECTIONS - N. WEST A
A3026	ENLARGED ELEV, PART. PLAN & WALL SECTIONS - N. WEST B
A3027	ENLARGED ELEV, PART. PLAN & WALL SECTIONS - N. WEST B
A3030	ENLARGED ELEV, PART. PLAN & WALL SECTIONS - N. WEST C
A3031	ENLARGED ELEV, PART. PLAN & WALL SECTIONS - WEST 1
A3032	ENLARGED ELEV, PART. PLAN - WEST 2
A3033	ENLARGED WALL SECTIONS - WEST 2
A3034	ENLARGED ELEV, PART. PLAN - WEST 3A
A3035	ENLARGED ELEV, PART. PLAN & WALL SECTIONS - WEST 3B
A3036	ENLARGED ELEV, PART. PLAN & WALL SECTIONS - WEST 3C
A3100	3D VIEWS
A4001	BUILDING SECTIONS
A5201	STAIR PLANS & SECTIONS - B-110
A5202	STAIR PLANS & SECTIONS - B-180
A5203	STAIR PLANS & SECTIONS - B-130 & B-140
A5302	PASSENGER ELEVATOR PLANS & SECTIONS
A5303	FREIGHT ELEVATOR PLANS & SECTIONS
A5401	ESCALATOR PLANS & SECTIONS - B160
A8001	SITE DETAILS
A8201	WALL DETAILS
A8202	SEISMIC JOINT
A8401	ROOF DETAILS
A8602	ELEVATOR DETAILS
4. Sructure	
S0001	GENERAL NOTES
S0002	GENERAL NOTES
S0003	GENERAL NOTES
S0004	GENERAL NOTES
S1001	TYPICAL DETAILS
S1002	TYPICAL DETAILS
S1003	TYPICAL DETAILS
S1004	TYPICAL DETAILS
S1005	TYPICAL DETAILS
S1006	TYPICAL DETAILS
S1007	TYPICAL DETAILS
S1008	TYPICAL DETAILS
S1009	TYPICAL DETAILS
S2001	OVERALL FOUNDATION PLAN
S2002	OVERALL SECOND FLOOR FRAMING PLAN
S2003	OVERALL ROOF FRAMING PLAN
S2101	FOUNDATION PLAN - EAST & LOADING DOCK
S2102	FOUNDATION PLAN - NORTHWEST
S2103	FOUNDATION PLAN - SOUTHWEST
S2201	SECOND FLOOR FRAMING PLAN - EAST & LOADING DOCK CANOPY
S2202	SECOND FLOOR FRAMING PLAN - NORTHWEST
S2203	SECOND FLOOR FRAMING PLAN - SOUTHWEST
S2301	ROOF FRAMING PLAN - EAST
S2302	ROOF FRAMING PLAN - NORTHWEST
S2303	ROOF FRAMING PLAN - SOUTHWEST
S2401	SCREEN WALL FRAMING PLAN - EAST
S2402	SCREEN WALL FRAMING PLAN - NORTHWEST
S2403	SCREEN WALL FRAMING PLAN - SOUTHWEST
S3001	NON-FRAME COLUMN SCHEDULE
S3002	MOMENT FRAME ELEVATIONS
S3003	MOMENT FRAME ELEVATIONS
S3004	MOMENT FRAME ELEVATIONS
S3005	MOMENT FRAME ELEVATIONS
S3101	NON-FRAME COLUMN SECTIONS AND ELEVATIONS
S3102	MOMENT FRAME SECTIONS AND ELEVATIONS
S4001	FOUNDATION SECTIONS AND DETAILS
S4002	GRADE BEAM SECTIONS AND ELEVATIONS
S4003	FOUNDATION SECTIONS AND DETAILS
S5001	STEEL DETAILS
S5101	ROOF SCREEN ELEVATIONS & DETAILS

Sheet List

Sheet Number	Sheet Name
5. MECHANICAL	
M0001B	MECHANICAL COVER SHEET
M0002B	EQUIPMENT SCHEDULES
M1001B	SITE PLAN - MECH
M2101B	FIRST FLOOR PLAN - MECH
M2102B	SECOND FLOOR PLAN - MECH
M2801B	ROOF PLAN MECHANICAL
6.0 ELECTRICAL	
E0.01	SYMBOLS AND ABBREVIATIONS
E0.02	ELECTRICAL SCHEDULES
E0.03	ELECTRICAL SCHEDULES
E0.04	ELECTRICAL SCHEDULES
E1.01	ENLARGED ELECTRICAL SITE PLAN
E2.01	LEVEL 1 OVERALL POWER PLAN
E2.02	LEVEL 2 OVERALL POWER PLAN
E2.03	ROOF POWER PLAN
E2.04	LEVEL 1 ENLARGED EAST POWER PLAN
E2.05	LEVEL 1 ENLARGED NORTHWEST POWER PLAN
E2.06	LEVEL 1 ENLARGED SOUTHWEST POWER PLAN
E2.07	LEVEL 2 ENLARGED EAST POWER PLAN
E2.08	LEVEL 2 ENLARGED NORTHWEST POWER PLAN
E2.09	LEVEL 2 ENLARGED SOUTHWEST POWER PLAN
E3.01	LEVEL 1 OVERALL LIGHTING PLAN
E3.02	LEVEL 2 OVERALL LIGHTING PLAN
E3.03	LEVEL 1 ENLARGED EAST LIGHTING PLAN
E3.04	LEVEL 1 ENLARGED NORTHWEST LIGHTING PLAN
E3.05	LEVEL 1 ENLARGED SOUTHWEST LIGHTING PLAN
E3.06	LEVEL 2 ENLARGED EAST LIGHTING PLAN
E3.07	LEVEL 2 ENLARGED NORTHWEST LIGHTING PLAN
E3.08	LEVEL 2 ENLARGED SOUTHWEST LIGHTING PLAN
E4.01	LEVEL 1 MECHANICAL POWER PLAN
E4.02	LEVEL 2 MECHANICAL POWER PLAN
E4.03	ROOF MECHANICAL POWER PLAN
E5.01	ONE-LINE RISER DIAGRAM
E5.02	PANEL SCHEDULES
E6.01	ELECTRICAL DETAILS
8. PLUMBING	
P0001B	PLUMBING COVER SHEET
P0002B	PLUMBING SCHEMATIC DIAGRAMS
P1001B	BELOW GRADE PLAN - PLUMB
P2101B	FIRST FLOOR PLAN - PLUMB
P2102B	SECOND FLOOR PLAN - PLUMB
P2801B	ROOF PLAN - PLUMBING

ABBREVIATIONS

AB	ANCHOR BOLT	LAB	LABORATORY
ACM	ALUMINUM COMPOSITE METAL	LAV	LAVATORY
ACS FLR	ACCESS FLOOR	LB(S)	POUNDS
ACS PNL	ACCESS PANEL	LF	LINEAL FEET
ACT	ACOUSTICAL CEILING TILE	LL	LIVE LOAD
AD	AREA DRAIN	LPT	LOW POINT
ADA	AMERICANS WITH DISABILITIES ACT	LT WT	LIGHTWEIGHT
ADH	ADHESIVE	LTG	LIGHTING
ADJ	ADJUSTABLE		
AFF	ABOVE FINISHED FLOOR	MACH	MACHINE
AHU	AIR HANDLING UNIT	MATL	MATERIAL
ALT	ALTERNATE	MAX	MAXIMUM
ALUM	ALUMINUM	MECH	MECHANICAL
APC	ACOUSTICAL PANEL CEILING	MED	MEDIUM
APC	ARCHITECTURAL PRECAST CONCRETE	MEMB	MEMBRANE
		MEZZ	MEZZANINE
B/	BOTTOM OF	MFR	MANUFACTURER
BD	BOARD	MH	MANHOLE
BLDG	BUILDING	MIN	MINIMUM
BM	BENCH MARK	MISC	MISCELLANEOUS
BOT	BOTTOM	MLDG	MOLDING
BSMT	BASEMENT	MO	MASONRY OPENING
		MTD	MOUNTED
CB	CATCH BASIN	MTL	METAL
CG	CORNER GUARD	MWP	MEMBRANE WATERPROOFING
CI	CAST IRON		
CJ	CONTROL JOINT	N	NORTH
CL	CENTERLINE	NC	NOISE CRITERIA
CLG	CEILING	NIC	NOT IN CONTRACT
CLO	CLOSET	NOM	NOMINAL
CLR	CLEAR	NTS	NOT TO SCALE
CMU	CONCRETE MASONRY UNIT		
CMT	COLOR TO MATCH	OC	ON CENTER
CO	CLEAN OUT	OD	OUTSIDE DIAMETER
COL	COLUMN	OH	OVERHEAD
CONC	CONCRETE	OPNG	OPENING
CONSTR	CONSTRUCTION	OPP	OPPOSITE
CONT	CONTINUOUS		
CORR	CORRIDOR	PCC	PRECAST CONCRETE
CPT	CARPET	PCMU	PREFACED CONCRETE MASONRY
CSK	COUNTERSUNK	UNIT	
CT	CERAMIC TILE	PCP	PORTLAND CEMENT PLASTER
		PERP	PERPENDICULAR
DEMO	DEMOLITION	PL	PLATE
DEPT	DEPARTMENT	PLAM	PLASTIC LAMINATE
DET	DETAIL	PLAS	PLASTER
DF	DRINKING FOUNTAIN	PLBG	PLUMB(ING)/(ER)
DIA	DIAMETER	PLYWD	PLYWOOD
DIAG	DIAGONAL	PN	PROJECT NORTH
DIM	DIMENSION	PNL	PANEL
DL	DEAD LOAD	PR	PAIR
DMPF	DAMP PROOF(ING)	PREFAB	PREFABRICATED
DN	DOWN	PROP	PROPERTY
DR	DOOR	PSF	POUNDS PER SQUARE FOOT
DRN	DRAIN	PSI	POUNDS PER SQUARE INCH
DS	DOWNSPOUT	PT	PAINT
DWG / DWGS	DRAWING / DRAWINGS	PTD	PAINTED
E	EAST	QT	QUARRY TILE
EA	EACH		
EC	EXPOSED CONSTRUCTION	R	RISER/RADIUS
EIFS	EXTERIOR INSULATION FINISH SYSTEM	RB	RESILIENT BASE
EJ	EXPANSION JOINT	RCP	REFLECTED CEILING PLAN
EL	ELEVATION	RD	ROOF DRAIN
ELEC	ELECTRIC	RECV	RECEIVING
ELEV	ELEVATOR	REF	REFERENCE
EMER	EMERGENCY	REF	REFRIGERATOR
EMER SHR	EMERGENCY SHOWER	REINF	REINFORCED
ENCL	ENCLOSURE	REQD/REQ'D	REQUIRED
EQ	EQUAL	REQ/REQS	REQUIREMENT/REQUIREMENTS
EQUIP	EQUIPMENT	REV	REVISION, REVISED
ETC	ET CETERA	RF	RESILIENT FLOORING
EWC	ELECTRIC WATER COOLER	RM	ROOM
EWS	EYE WASH STATION	RO	ROUGH OPENING
EXH	EXHAUST	ROW	RIGHT OF WAY
EXIST	EXISTING	RTU	ROOF TOP UNIT
EXP	EXPANSION JOINT		
EXT	EXTERIOR	S	SOUTH
		SAB	SOUND ATTENUATION BATT (BLANKET)
FA	FIRE ALARM	SAN	SANITARY
FD	FLOOR DRAIN	SC	SOLID CORE
FDN	FOUNDATION	SCHED	SCHEDULE
FE	FIRE EXTINGUISHER	SECT	SECTION
FEC	FIRE EXTINGUISHER CABINET	SF	SQUARE FEET
FH	FIRE HYDRANT	SHT	SHEET
FHC	FIRE HOSE CABINET	SIM	SIMILAR
FHCE	FIRE HOSE CABINET & EXTINGUISHER	SQ	SQUARE
FHR	FIRE HOSE RACK	SS	STAINLESS STEEL
FIN	FINISH	STC	SOUND TRANSMISSION CLASS
FIN FLR EL	FINISH FLOOR ELEVATION	STD	STANDARD
FLR	FLOOR	STL	STEEL
FLUOR	FLUORESCENT	STOR	STORAGE
FO	FACE OF	STRUCT	STRUCTURAL
FRG	FIBERGLASS REINFORCED GYPSUM	SUSP	SUSPENDED
FT	FOOT OR FEET	SYMM	SYMMETRICAL
FTG	FOOTING		
FURN	FURNISH(ED) (FURNITURE)	T	TREAD
		T/	TOP OF
GA	GAUGE	TBD	TO BE DETERMINED
GALV	GALVANIZED	TEL	TELEPHONE
GL	GLASS	TER	TERRAZZO
GYP	GYPSUM	TEMP	TEMPORARY
		THK	THICK(NESS)
H	HIGH	TN	TRUE NORTH
HB	HOSE BIBB	TS	TUBE STEEL
HC	HOLLOW CORE	TV	TELEVISION
HCP	HANDICAP(PED)	TYP	TYPICAL
HDW	HARDWARE		
HM	HOLLOW METAL	UL	UNDERWRITERS LABORATORIES
HORIZ	HORIZONTAL	UNASSIG	UNASSIGNED
HPT	HIGH POINT	UNO	UNLESS NOTED OTHERWISE
HR	HOUR	UR	URINAL
HT	HEIGHT		
HVAC	HEATING, VENTILATION, AIR CONDITIONING	VAR	VARIES
		VERT	VERTICAL
ID	INSIDE DIAMETER	VEST	VESTIBULE
IN	INCH	VIF	VERIFY IN FIELD
INCL	INCLUDE(D)/(ING)		
INSUL	INSULATION/INSULATE	W	WEST, WIDTH, WIDE
INT	INTERIOR	W/	WITH
		WBL	WOOD BLOCKING
J.C.	JANITOR CLOSET	WC	WATER CLOSET
JT	JOINT	WD	WOOD BLOCKING
		WH	WATER HEATER
KIT	KITCHEN	WP	WORK POINT
KOP	KNOCK OUT PANEL	WWF	WELDED WIRE FABRIC
		WWM	WELDED WIRE MESH

MATERIALS LEGEND

(MATERIALS INDICATIONS N.T.S.)

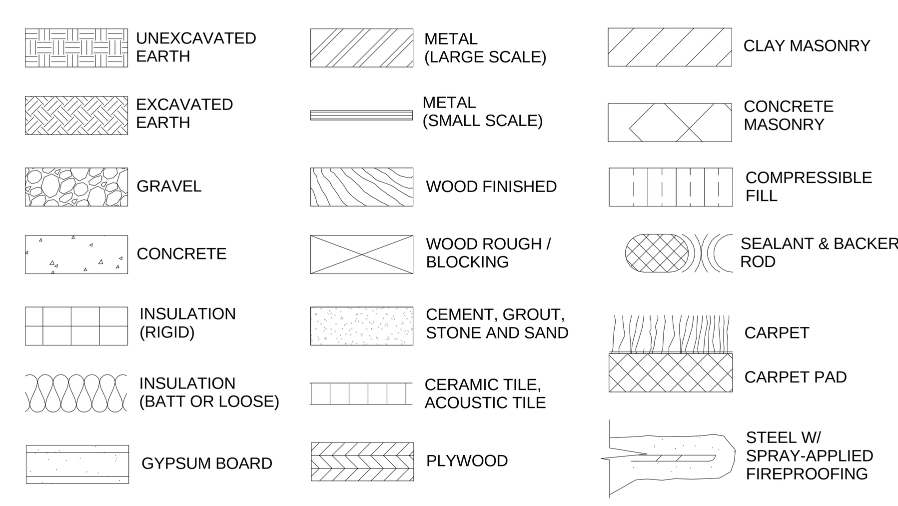

GENERAL NOTES

1. PERFORM ALL WORK IN STRICT ACCORDANCE WITH THE REQUIREMENTS OF ALL GOVERNING CODES AND ORDINANCES, INCLUDING BUT NOT LIMITED TO INTERNATIONAL BUILDING CODE 2012, WASHINGTON STATE CODES, ICC/ANSI 117.1-2003, OSHA REGULATIONS, AND ALL AGENCIES HAVING JURISDICTION.
2. THE GENERAL CONTRACTOR AND ALL SUBCONTRACTORS SHALL VERIFY IN THE FIELD ALL CONDITIONS AFFECTING THEIR WORK. SUBSURFACE CONDITIONS MUST BE INSPECTED PRIOR TO THE START OF WORK. ANY CONDITIONS FOUND THAT ALTER OR OTHERWISE CHANGE THE REQUIREMENTS FOR THE WORK SHALL BE REPORTED IMMEDIATELY TO THE ARCHITECT. ALL CONTRACTORS SHALL CHECK AND VERIFY ALL DIMENSIONS, ELEVATIONS AND CONDITIONS AT THE SITE PRIOR TO COMMENCEMENT OF WORK AND NOTIFY THE ARCHITECT IN WRITING OF ANY DISCREPANCIES IN PLANS AND SPECIFICATIONS BEFORE PROCEEDING.
3. ALL WORK OF THE PROJECT SHALL BE PERFORMED CAREFULLY AND SKILLFULLY BY WORKERS ADEPT IN THEIR TRADES.
4. CARE SHALL BE TAKEN TO AVOID DISTURBANCE OF ADJACENT FUNCTIONS/BUILDINGS. ALL WORK, DELIVERIES AND OTHER CONSTRUCTION RELATED ACTIVITIES SHALL ADHERE IN STRICT ACCORDANCE TO THE CITY OF KIRKLAND RESTRICTIONS AND CONDITIONS. GENERAL CONTRACTOR IS TO HAVE A COPY OF SAID REQUIREMENTS AND CONDITIONS AVAILABLE AT THE JOB SITE AT ALL TIMES FOR REVIEW. SCHEDULING OF ALL WORK, DELIVERIES, AND SHUTDOWNS SHALL BE COORDINATED WITH THE OWNER AND OWNERS OF ADJACENT PROPERTIES.
5. THE GENERAL CONTRACTOR IS RESPONSIBLE FOR THE THOROUGH COORDINATION OF ALL TRADES. NO CLAIMS FOR ADDITIONAL WORK WILL BE ACCEPTED FOR WORK RELATED TO SUCH COORDINATION.
6. ALL CONTRACTORS SHALL EXAMINE THE BID DOCUMENTS AND SHALL BE INFORMED OF THE ENTIRE CONTENTS THEREOF PRIOR TO SUBMISSION OF ANY PROPOSAL. ALL CONTRACTORS SHALL EXAMINE THE CONTRACT DOCUMENTS AND SHALL BE INFORMED OF THE ENTIRE CONTENTS THEREOF PRIOR TO THE COMMENCEMENT OF ANY WORK. ANY ERRORS OR AMBIGUITIES NOTED DURING SAID EXAMINATION SHALL BE IMMEDIATELY BROUGHT TO THE ATTENTION OF THE ARCHITECT, PRIOR TO THE SUBMISSION OF A BID. THE ARCHITECT WILL ISSUE AN ADDENDUM OR INTERPRETATION OF THE CITED ERROR OR AMBIGUITY. NO SUBSEQUENT CLAIM FOR EXTRA WORK WILL BE ALLOWED ON ACCOUNT OF CLAIMED MISUNDERSTANDING OF THE MEANING OR INTENT OF THE CONTRACT DOCUMENTS OR ANY PORTION THEREOF IF THE ITEM OCCASIONING THE CLAIM APPEARED IN, OR WAS INFERABLE FROM, SAID CONTRACT DOCUMENTS AS FURNISHED FOR BIDDING OR CONSTRUCTION.
7. ALL WOOD BLOCKING AND FINISHES SHALL COMPLY WITH THE FIRE RESISTIVE REQUIREMENTS OF THE INTERNATIONAL BUILDING CODE
8. FIRE STOPS, DRAFT STOPS AND ALL FIRE SAFING IS TO BE PROVIDED AS REQUIRED BY THE CODE: (SEE SPECIFICATION CHAPTER 7). FIRE-RESISTANCE-RATED PARTITIONS, FIRE BARRIERS, AND FIRE WALLS SEPARATING VACANT TENANT SPACES FROM THE REMAINDER OF THE BUILDING SHALL BE MAINTAINED. OPENINGS, JOINTS, AND PENETRATIONS IN FIRE-RESISTANCE-RATED ASSEMBLIES SHALL BE PROTECTED IN ACCORDANCE WITH CHAPTER 7 OF THE INTERNATIONAL BUILDING CODE.
9. PERSONS, IN CHARGE OR CONTROL OF, A BUILDING OR PORTION THEREOF, SHALL REMOVE THEREFROM ALL ACCUMULATIONS OF COMBUSTIBLE MATERIALS, FLAMMABLE OR COMBUSTIBLE WASTE OR RUBBISH AND SHALL SECURELY LOCK OR OTHERWISE SECRURE DOORS, WINDOWS AND OTHER OPENINGS TO PREVENT ENTRY BY UNAUTHERIZED PERSONS. THE PREMISE SHALL BE MAINTAINED CLEAR OF WASTE AND HAZARDOUS MATERIALS.
10. ALL DIMENSIONS, NOTES AND DETAILS SHOWING A PORTION OF A DRAWING SHALL APPLY TYPICALLY TO ALL OPPOSITE HAND AND/OR SIMILAR CONDITIONS. DO NOT SCALE DRAWINGS & VERIFY ALL LISTED DIMENSIONS IN FIELD AS REQUIRED FOR THE SCOPE OF THE WORK.
11. DRAWINGS OF EXISTING CONSTRUCTION ARE INTENDED TO BE AN AID TO RECONSTRUCTION AND CANNOT BE ASSUMED TO BE ACCURATE IN DETAIL OR DIMENSION. CONTRACTOR SHALL CHECK AND VERIFY ALL DIMENSIONS, ELEVATIONS, AND CONDITIONS AT THE SITE PRIOR TO COMMENCEMENT OF WORK AND NOTIFY THE ARCHITECT IN WRITING OF ANY DISCREPANCIES IN PLANS AND SPECIFICATIONS BEFORE PROCEEDING.
12. ALL WORK INCLUDED IN THE CONSTRUCTION DOCUMENTS IS THE RESPONSIBILITY OF THE GENERAL CONTRACTOR UNLESS NOTED OTHERWISE. ALL SYSTEMS SHALL BE OPERATIONAL AND IN GOOD WORKING ORDER.
13. PER THE INTERNATIONAL BUILDING CODE, FIRE-RETARDANT TREATED WOOD IS PERMITTED WITHIN ASSEMBLIES OF TWO-HOUR MAXIMUM RATING (SEE CODE MATRIX).
14. ALL STEEL LINTELS OVER MASONRY WALL OPENINGS 5'-0" WIDE OR WIDER SHALL BE FIRE-PROOFED WITH INTUMESCENT PAINT OR OTHER APPROVED FIRE-PROOFING METHOD. BOTTOM FLANGE OF THE LINTEL NEED NOT BE FIRE-PROOFED. ARCHITECT TO APPROVE FIRE-PROOFING METHOD IF OTHER THAN INTUMESCENT PAINT.
15. ALL ELECTRIC RISERS AND SHAFTS SERVING ELEVATORS, EMERGENCY AND EXIT LIGHTS, VOICE COMMUNICATION SYSTEMS, AND SMOKE CONTROL SYSTEMS/EQUIPMENT ARE TO BE ENCLOSED WITH TWO HOUR FIRE-RESISTIVE RATED CONSTRUCTION AND ARE TO INCLUDE CONTINUOUS THREE INCH (3") HIGH WATER STOPS ON ALL SIDES AS APPROPRIATE. INSTALL SLEEVES AS REQ'D.
16. REFER TO SPECIFICATIONS FOR ADDITIONAL INFORMATION. REFER TO STRUCTURAL, MECHANICAL, PLUMBING, AND ELECTRICAL DRAWINGS FOR ADDITIONAL GENERAL NOTES, CODE REQUIREMENTS, AND INFORMATION.
17. PROVIDE MIN. 4" HIGH REINFORCED CONCRETE HOUSEKEEPING PADS (OR SIZED PER CODE REQUIREMENTS AND/OR EQUIPMENT MANUFACTURER'S RECOMMENDATION) FOR ALL FLOOR MOUNTED EQUIPMENT.
18. PROVIDE FIRE-RETARDANT TREATED PLYWOOD BACKER BOARDS AROUND THE INSIDES OF ALL ELECTRICAL, TELEPHONE, AND IT (SECURITY, NETPOP, ETC.) ROOMS THROUGHOUT BUILDING AS REQUIRED FOR INSTALLATION OF EQUIPMENT.
19. ALL ACCESSIBLE ROUTES/DRIVE AISLES AND HANDICAPPED PARKING SPACES SHALL HAVE A MINIMUM CLEAR HEIGHT OF 86" ABOVE FINISH FLOOR, TO UNDERSIDE OF ALL BUILDING COMPONENTS.
20. FLAME SPREAD LIMITATIONS FOR INTERIOR FINISHES USED IN THE RESIDENTIAL PUBLIC CORRIDORS AND EXIT STARIS SHALL BE:
    - 1.1. FINISHED MATERIALS FOR PUBLIC CORRIDORS: MIN. CLASS I I FLAME SPREAD
    - 1.2. FINISHED MATERIALS FOR EXIT STAIRS: MIN. CLASS I FLAME SPREAD
21. SWITCHES AND OUTLETS TO BE WHITE WITH WHITE COVERPLATE, DECORA STYLE

VICINITY MAP

SYMBOLS LEGEND

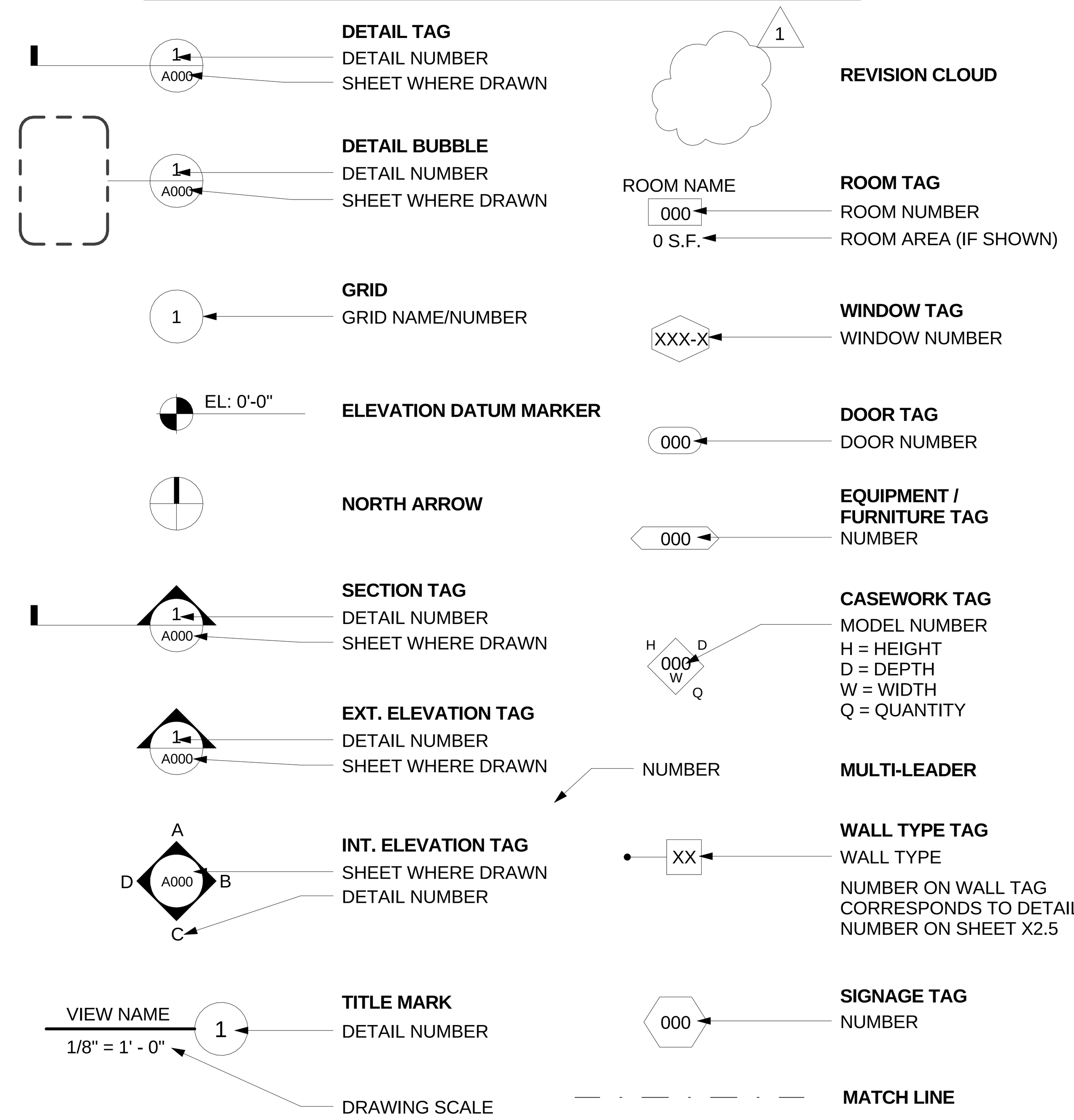

CLIENT

CENTERCAL PROPERTIES, LLC

COPYRIGHT:

Any reproduction or distribution for any purpose other than authorized by IBI Group is forbidden. Written dimensions shall have precedence over scaled dimensions. Contractors shall verify and be responsible for all dimensions and conditions on the job and IBI Group shall be informed of any variations from the dimensions and conditions shown on the drawing. Shop drawings shall be submitted to IBI Group for approval before proceeding with fabrication.

COPYRIGHT © 2016 IBI GROUP

ISSUES

NO.	ISSUANCE	STATUS	DATE
1	PROGRESS SET		5/26/2016

SEAL

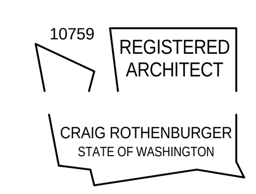

SUB CONSULTANT

PRIME CONSULTANT

IBI ibigroup.com

PROJECT

The Village at Totem Lake - Building B
Kirkland, Washington

PROJECT NO:	Building B
DRAWN BY:	Author
CHKD' BY:	Checker
SCALE:	As indicated
DATE:	05/26/2016

SHEET TITLE

SHEET INDEX, CODE MATRIX, GEN. NOTES, ABBREV. & LEGENDS

BLDG	SHEET NUMBER	ISSUE
B	G1001	

5/26/2016 7:15:37 PM

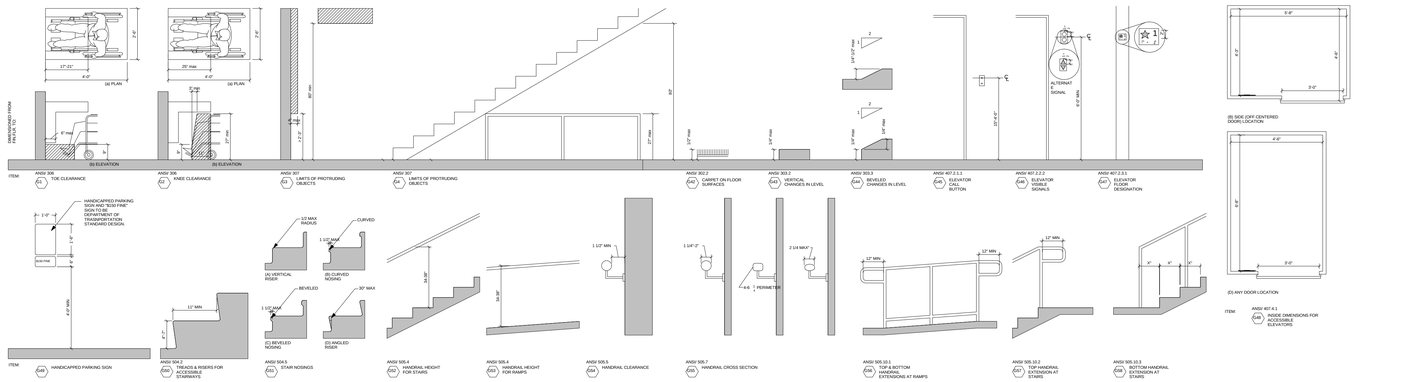

MANEUVERING CLEARANCE AT MANUAL SWINGING DOORS

UP PER ANSI/ 404

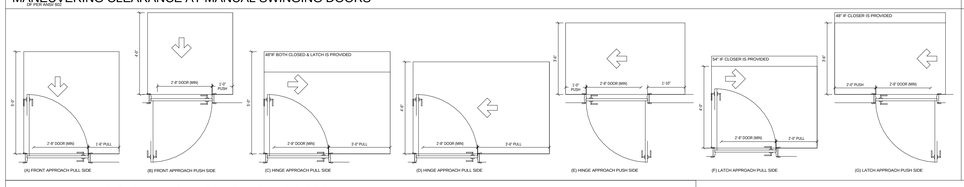

MANEUVERING CLEARANCE AT SLIDING DOORS

UP PER ANSI/ 404

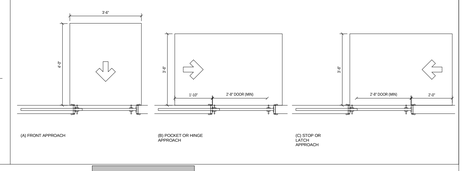

MANEUVERING CLEARANCE AT RECESSED DOORS

UP PER ANSI/ 404

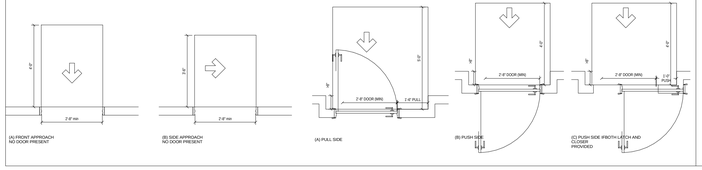

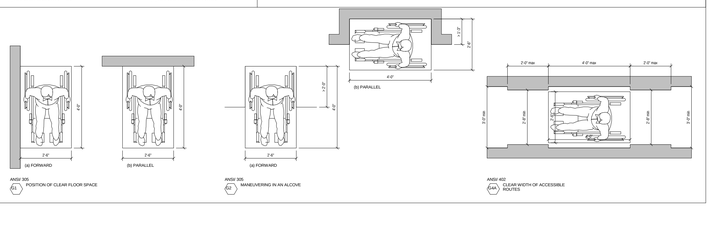

ACCESSIBILITY GENERAL NOTES

1. THIS PROJECT SHALL COMPLY FULLY WITH ALL REQUIREMENTS OF THE 2012 INTERNATIONAL BUILDING CODE CHAPTER 11 AND ANSI A 117.1-2009 AS APPLICABLE
2. ALL DOORS LEADING TO REQUIRED ACCESSIBLE SPACES SHALL BE MINIMUM 2'-0" WIDE, 18" CLEARANCE ON PULL SIDE, AND HAVE LEVER OPERATED HARDWARE, AND COMPLY FULLY WITH ANSI A117.1-2009 SECTION 404 (DOORS AND DOORWAYS).
3. ALL DOORS LEADING TO HAZARDOUS SPACES SHALL HAVE KNURLED
4. ALL CONTROLS AND OPERATING MECHANISMS SHALL BE WITHIN REACH RANGE (AS DESCRIBED IN ANSI A117.1 SECTION 308) AND COMPLY WITH IBC CHAPTER 11 (CONTROLS, OPERATING MECHANISMS AND HARDWARE) 10 A.F.F. TO 48" A.F.F.
5. ALL EMERGENCY WARNING / FIRE ALARM SYSTEMS SHALL BE BOTH AUDIBLE AND VISUAL AND SHALL COMPLY FULLY WITH ANSI 117.1 2009 CH. 7.702. ALL VISUAL ALARMS THROUGHOUT THE BUILDING TO BE SYNCHRONIZED.
6. VISUAL ALARMS SHALL BE MOUNTED 80" AFF OR 6" BELOW CEILING, WHICHEVER IS LESS. VISUAL ALARMS ONLY ARE ACCEPTABLE IF AN AUDIBLE ALARM LOCATED IN THE CORRIDOR IS CLOSE ENOUGH TO EXCEED SOUND LEVELS WITHIN THE ROOM OR SPACE BY A MINIUM OF 15 DBA.
7. WHERE A REQUIRED EXIT FROM AN OCCUPIABLE LEVEL ABOVE OR BELOW A
8. ALL STAIRS, EXCEPT THOSE IN DWELLING UNITS, IN ENCLOSED STAIR TOWERS, OR SET TO THE SIDE OF THE PATH OF TRAVEL SHALL HAVE A DETECTTABLE WARNING AT THE TOP AND AT THE LANDING OF STAIR RUNS, COMPLYING WITH IBC CHAPTER 10 ALL STAIRS SHALL COMPLY WITH IBC CHAPTER 10
9. SIGNAGE (NIC) PROVIDED THROUGHOUT THE BUILDING SHALL BE BRAILLE, TACTILE AND COLOR CONTRASTING AND FULLY COMPLY WITH IBC 2012 (SIGNAGE).
10. NOT USED
11. PROVIDE MAXIMUM 1:12 SLOPE AT ALL RAMPS WITH HANDRAILS AT BOTH SIDES. (ANSI A117.1-4R8)
12. MAIN BUILDING ENTRY SHALL BE ALONG AN ACCESSIBLE ROUTE, AND SHALL COMPLY WITH CHAPTER 11, IBC 2012
13. ACCESSIBLE ENTRANCE: MAIN ENTRY SHALL BE FULLY ACCESSIBLE, EQUIPPED WITH ELECTRIC PUSH-BUTTON DOOR OPERATOR DEVICE, AND COMPLY FULLY WITH IBC 1105 (ACCESSIBLE ENTRANCES). RECEPTION DESK TO PROVIDE ACCESSIBLE ACCESS 28" WIDE @ 30" TO 34" A.F.F.)
14. NOT USED
15. NOTE USED
16. GRAB BARS SHALL BE INSTALLED AT 33" TO 36" A.F.F. TO TOP OF GRAB BAR. FLUSH CONTROLS IN ADA STALLS AND BATHROOMS TO BE ON THE WIDE SIDE OF THE TOILET
17. NOT USED
18. NOT USED
19. CHANGE IN LEVEL OF 1/4 INCH MAXIMUM SHALL BE PERMITTED TO BE VERTICAL. CHANGES IN LEVEL BETWEEN 1/4 INCH HIGH MAXIMUM AND 1/2 INCH HIGH MAXIMUM SHALL BE BEVELED WITH A SLOPE NOT STEEPER THAN 1:2. CHANGES IN LEVEL GREATER THAN 1/2 INCH SHALL BE RAMPED AND SHALL COMPLY WITH ANSI 117.1.

ACCESSIBILITY REQUIREMENTS

ENTRANCES

1. PROVIDE 32" MIN. CLEAR DOOR OPENING FOR ENTRANCE DOORS
2. SECOND MEANS OF EGRESS AS REQUIRED BY FIRE CODE
3. ALL ENTRANCE DOORS SHALL HAVE LEVEL OPERATED HARDWARE
4. 18" MIN MANEUVERING CLEARANCE ON PULL SIDE OF DOOR
5. THRESHOLD HEIGHT SHALL BE NO GREATER THAN 1/2" FOR SWING DOORS AND NO GREATER THAN 3/4" SLIDING GLASS DOORS
6. DOOR OPENING FORCE SHALL BE NO GREATER THAN 8.5 LBS.

KITCHENS

ACCESSIBLE ROUTE

7. ACCESSIBLE KITCHENS AND THEIR COMPONENTS SHALL BE ON AN ACCESSIBLE ROUTE

CLEAR FLOOR SPACE

8. CLEARANCE BETWEEN COUNTERS SHALL BE 40" MIN
9. CLEARANCE BETWEEN COUNTERS UN U-SHAPED KITCHENS SHALL BE 60" MIN
10. A CLEAR FLOOR SPACE AT LEAST 30"x48" THAT ALLOWS EITHER A FORWARD OR PARALLEL APPROACH SHALL BE PROVIDED AT ALL APPLIANCES

CONTROLS

11. ALL CONTROLS, DISPENSERS, RECEPTACLES AND OTHER OPERABLE EQUIPMENT SHALL COMPLY WITH A FORWARD OR PARALLEL APPROACH

REACH RANGE REQUIREMENTS (FORWARD APPROACH 15"-48" ABOVE FINISHED FLOOR (AFF) PARALLEL APPROACH 9" TO 54" AFF).

1	MOUNTING HEIGHTS, DIAGRAMS & NOTES	1
G1101	1 : 36	

CLIENT

CENTERCAL PROPERTIES, LLC

COPYRIGHT:

Any reproduction or distribution for any purpose other than authorized by IBI Group is forbidden. Written dimensions shall have precedence over scaled dimensions. Contractors shall verify and be responsible for all dimensions and conditions on the job, and report any errors or omissions to the consultant on the dimensions and conditions shown on the drawing. Shop drawings shall be submitted to IBI Group for approval before proceeding with fabrication.

COPYRIGHT © 2016 IBI GROUP

ISSUES

NO.	ISSUIANCE	STATUS	DATE
1	PROGRESS SET		5/26/2016

SEAL

10759 REGISTERED ARCHITECT
CRAIG ROTHENBURGER
STATE OF WASHINGTON

SUB CONSULTANT

PRIME CONSULTANT

IBI ibigroup.com

PROJECT

The Village at Totem Lake - Building B
Kirkland, Washington

PROJECT NO:	Building B
DRAWN BY:	Author
CHKD' BY:	Checker
SCALE:	1 : 36
DATE:	05/26/2016

SHEET TITLE

MOUNTING HEIGHTS, DIAGRAMS & NOTES

BLDG	SHEET NUMBER	ISSUE
B	G1101	

C:\Users\craigro\Documents\ATW_Totem_Bldg B_A_2016_craigro.rvt

5/26/2016 6:48:34 PM

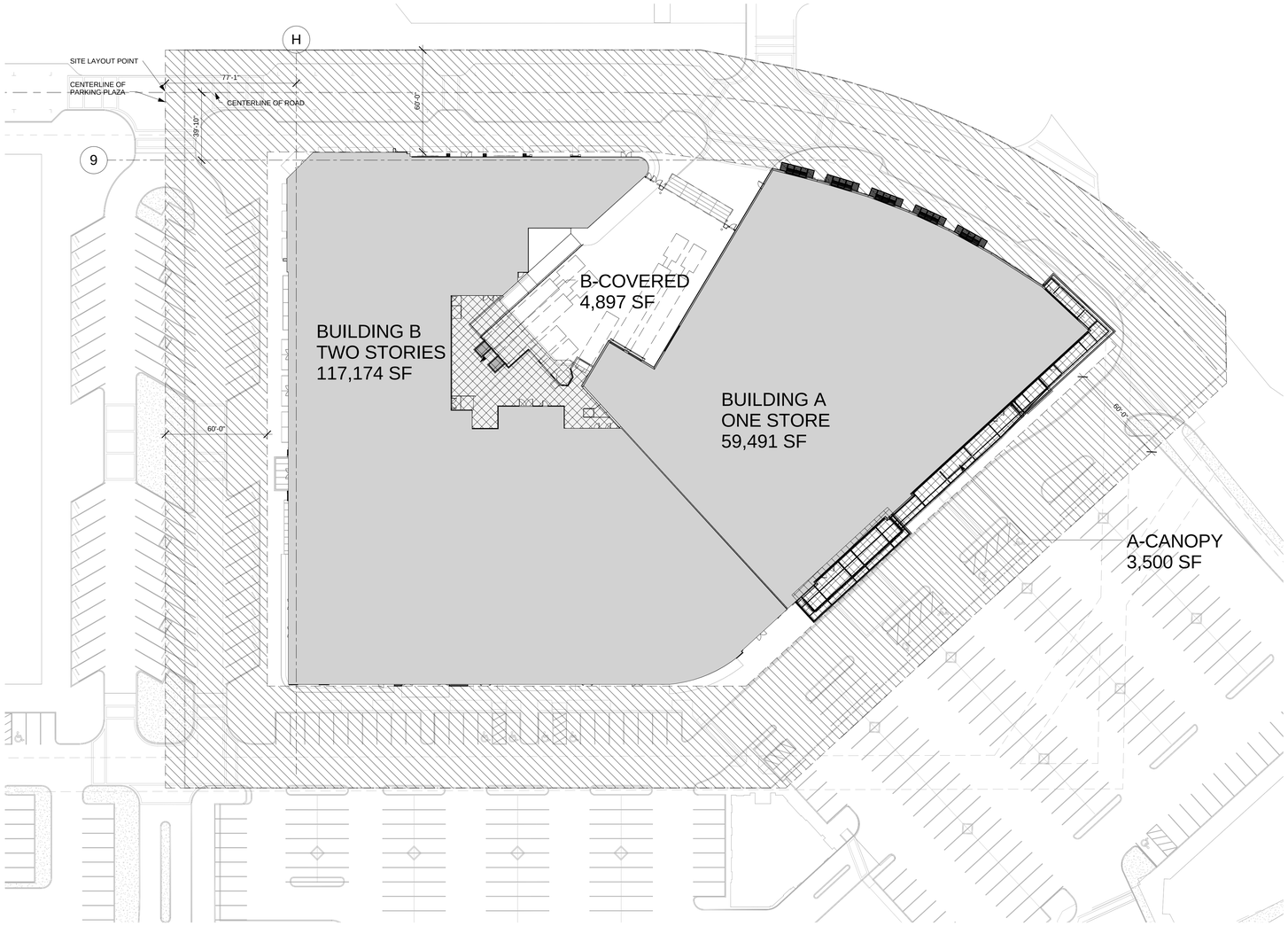

1 G1200 BUILDING CODE ANALYSIS
Scale: 1/32" = 1'-0"

N PROJECT

N TRUE

INTERNATIONAL BUILDING CODE
ICC 2012 W/ AMENDMENTS

CODE ANALYSIS
BUILDING A AND B ANALYSIS AS ONE BUILDING

CONSTRUCTION TYPE
TYPE IIB
SPRINKLERED:YES
OCCUPANCY: M

BUILDING HEIGHT AND AREA (SECTION 503 GENERAL)
ALLOWABLE FLOOR AREA: UNLIMITED AREA BUILDING PER SECTION 507.4
2 STORY BUILDING - SURROUNDED AND ADJOINED BY PUBLIC WAYS NOT LESS THAN 60 FEET IN WIDTH

ALLOWABLE STORIES: 2
ACTUAL STORIES: 2 (0NE STORY)

ACTUAL BUILDING FLOOR AREA
BLDG A (ONE STORY) : 59,491 sf
COVERED AREA: 3,500 sf
TOTAL BLDG A AREA: 62,991 sf

BLDG B (FIRST FLOOR): 58,760 sf
BLDG B (SECOND FLOOR): 58,414 sf
TOTAL BLDG B ENVELOP: 117,174 sf
COVERED AREA: 4,340 sf
TOTAL BLDG B AREA: 121,514 sf

ACTUAL TOTAL BUILDING AREA A AND B=184,505 sf

CLIENT
CENTERCAL PROPERTIES, LLC

COPYRIGHT:
Any reproduction or distribution for any purpose other than authorized by IBI Group is forbidden. Written dimensions shall have precedence over scaled dimensions. Contractors shall verify and be responsible for all dimensions and conditions on the job, and report any errors or omissions to the architect then the dimensions and conditions shown on the drawing. Shop drawings shall be submitted to IBI Group for approval before proceeding with fabrication.

COPYRIGHT © 2016 IBI GROUP

ISSUES

NO.	ISSUANCE	STATUS	DATE

SEAL
10759 REGISTERED ARCHITECT
CRAIG ROTHENBURGER
STATE OF WASHINGTON

SUB CONSULTANT

PRIME CONSULTANT
IBI
ibigroup.com

PROJECT
The Village at Totem Lake - Building B
Kirkland, Washington

PROJECT NO:	Building B
DRAWN BY:	Author
CHKD' BY:	Checker
SCALE:	1/32" = 1'-0"
DATE:	05/26/2016

SHEET TITLE
BUILDING CODE ANALYSIS

BLDG	SHEET NUMBER	ISSUE
B	G1200	

5/26/2016 6:48:53 PM C:\Users\jian.shoieb\Documents\ATW_Totem_B\bldgB_A_2016_bldgn.shoieb.rvt

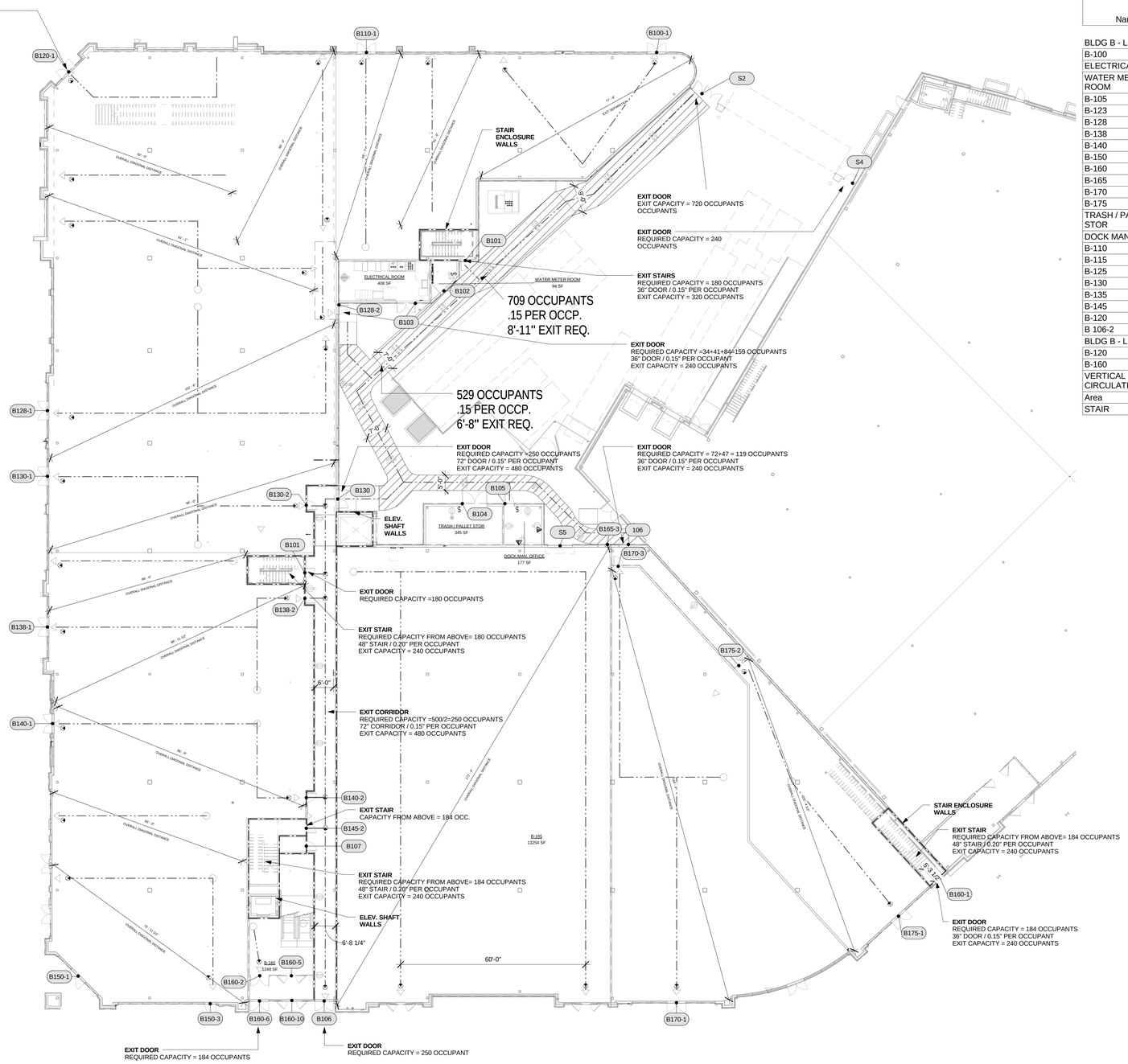

1 G1201 LIFE SAFETY PLAN - LEVEL 1

Scale: 1/16" = 1'-0"

N PROJECT

N TRUE

Means of Egress Calculation							
Name	Square Footage	Load Factor	No. Occupants	No. of Exits	Required Capacity/ Per Door	Egress Capacity Factor	Req. Exit Width (IN)
BLDG B - LEVEL 1-30.5							
B-100	2357 SF	30	79	2	40	0.15	6
ELECTRICAL ROOM	408 SF	30	14	1	14	0.15	3
WATER METER ROOM	94 SF	30	4	1	4	0.15	1
B-105	1487 SF	30	50	2	25	0.15	4
B-123	1410 SF	30	47	2	24	0.15	4
B-128	5027 SF	30	168	2	84	0.15	13
B-138	2786 SF	30	93	2	47	0.15	8
B-140	2633 SF	30	88	2	44	0.15	7
B-150	2805 SF	30	94	2	47	0.15	8
B-160	1248 SF	30	42	2	21	0.15	4
B-165	13254 SF	30	442	2	221	0.15	34
B-170	6549 SF	30	219	2	110	0.15	17
B-175	2819 SF	30	94	3	31	0.15	5
TRASH / PALLET STOR	345 SF	0		1		0	
DOCK MAN. OFFICE	177 SF			1			
B-110	1493 SF	30	50	2	25	0.15	4
B-115	2033 SF	30	68	2	34	0.15	6
B-125	2414 SF	30	81	2	41	0.15	7
B-130	2687 SF	30	90	2	45	0.15	7
B-135	1250 SF	30	42	1	42	0.15	7
B-145	1477 SF	30	50	1	50	0.15	8
B-120	1458 SF	30	49	1	49	0.15	8
B 106-2	214 SF						
BLDG B - LEVEL 2							
B-120	20762 SF	60	347	2	174	0.15	27
B-160	33170 SF	60	553	3	184	0.15	28
VERTICAL CIRCULATION	679 SF						
Area	1202 SF						
STAIR	205 SF						

EXIT DOOR CAPACITY		
Mark	Width	Actual Capacity
B105	36	240
B104	48	320
B130	72	480
B128-2	36	240
B128-2	36	240
B160-3	36	240
B175-2	36	240
B160-1	36	240
B103	36	240
B102	36	240
B101	36	240
B150-1	72	480
B100-1	72	480
B175-1	72	480
B170-3	36	240
B201	36	240
B170-1	73	488
B165-3	36	240
B160-2	72	480
B120-3	36	240
B130-1	72	480
B128-1	72	480
B138-1	72	480
B140-1	72	480
B120-1	72	480
B110-1	72	480
B150-3	43	285
B130-2	36	240
B140-2	36	240
B202	36	240
B138-2	36	240
B120-2	36	240
B101	36	240
B160-4	36	240
B145-2	36	240
B107	36	240
B160-2	72	480
B106	72	480
B160-6	73	485
B160-10	173	1150
B160-5	164	1093
B170-2	72	480
B108	36	240
B120-4	168	1120
B120-6	168	1120
B120-5	36	240
B120-7	36	240
B120-8	72	480

FIRE SEPARATION LEGEND:

ONE HOUR SEPARATION

EGRESS TRAVEL PATH

BUILDING CODE EXIT REQUIREMENTS

1. MAXIMUM TRAVEL DISTANCES (PER TABLE 1016.1):
   - A, M, R.....250 FT (W/ SPRINKLERS)
   - B.....300 FT (W/ SPRINKLERS)
   - S-2.....400 FT (W/ SPRINKLERS)
2. DEAD END CORRIDORS (PER SECTION 1018.4): 20 FT (EXCEPT 50 FT FOR OCCUPANCIES B, M, R, AND S W/ SPRINKLERS)
3. MINIMUM EXIT DOOR WIDTH: 36" MINIMUM EXIT STAIR WIDTH: 44"
4. DOOR WIDTH INDICATES WIDTH OF DOOR LEAF. STAIR WIDTH INDICATES WIDTH OF TREADS.
5. SINGLE MEANS OF EGRESS FROM DWELLING UNIT PERMITTED PER TABLE 1015.1 (100 OCCUP. MAX.)
6. THE CAPACITY OF EXITS CALCULATED AS FOLLOWS (PER SECTION 1005.3):
   - STAIRS AND OTHER VERTICAL EXITS: 0.20" PER PERSON
   - DOORS AND HORIZONTAL EXITS: 0.15" PER PERSON
7. OCCUPANCY CALCULATED AS FOLLOWS (PER TABLE 1004.1.2):
   BUSINESS AREAS.....100 SF PER PERSON
   MERCANTILE (BASEMENT & GRADE).....30 SF PER PERSON
   MERCANTILE (OTHER FLOORS).....60 SF PER PERSON
   MERCANTILE (LOADING / STORAGE).....300 SF PER PERSON
   MECHANICAL ROOMS.....300 SF PER PERSON

   ASSEMBLY, CONCENTRATED.....7 SF PER PERSON (NET)
   ASSEMBLY, UNCONCENTRATED.....15 SF PER PERSON (NET)
   PARKING GARAGES.....200 SF PER PERSON
   RESIDENTIAL UNITS.....200 SF PER PERSON
8. SWING OF EXIT DOORS IN THE DIRECTION OF EGRESS.
9. EGRESS HEADROOM: 7'-6" MIN. STAIRS AND DOORS HEADROOM: 6'-8" MIN.

CLIENT

CENTERCAL PROPERTIES, LLC

COPYRIGHT:

Any reproduction or distribution for any purpose other than authorized by IBI Group is forbidden. Written dimensions shall have precedence over scaled dimensions. Contractors shall verify and be responsible for all dimensions and conditions on the job, and report any errors or omissions to the architect then the dimensions and conditions shown on the drawing. Shop drawings shall be submitted to IBI Group for approval before proceeding with fabrication.

COPYRIGHT © 2016 IBI GROUP

ISSUES

NO.	ISSUANCE	STATUS	DATE
1	PROGRESS SET		5/26/2016

SEAL

10759 REGISTERED ARCHITECT

CRAIG ROTHENBURGER
STATE OF WASHINGTON

SUB CONSULTANT

PRIME CONSULTANT

IBI
ibigroup.com

PROJECT

The Village at Totem Lake - Building B
Kirkland, Washington

PROJECT NO:	Building B
DRAWN BY:	Author
CHKD' BY:	Checker
SCALE:	As indicated
DATE:	05/26/2016

SHEET TITLE

EGRESS & FIRE SEPARATION DIAGRAMS - LEVEL 1

BLDG	SHEET NUMBER	ISSUE
B	G1201	

C:\Users\bjan.shoesh\Documents\ATW_Totem_BldgB_A_2016_bjan.shoesh.rvt

5/26/2016 6:49:01 PM

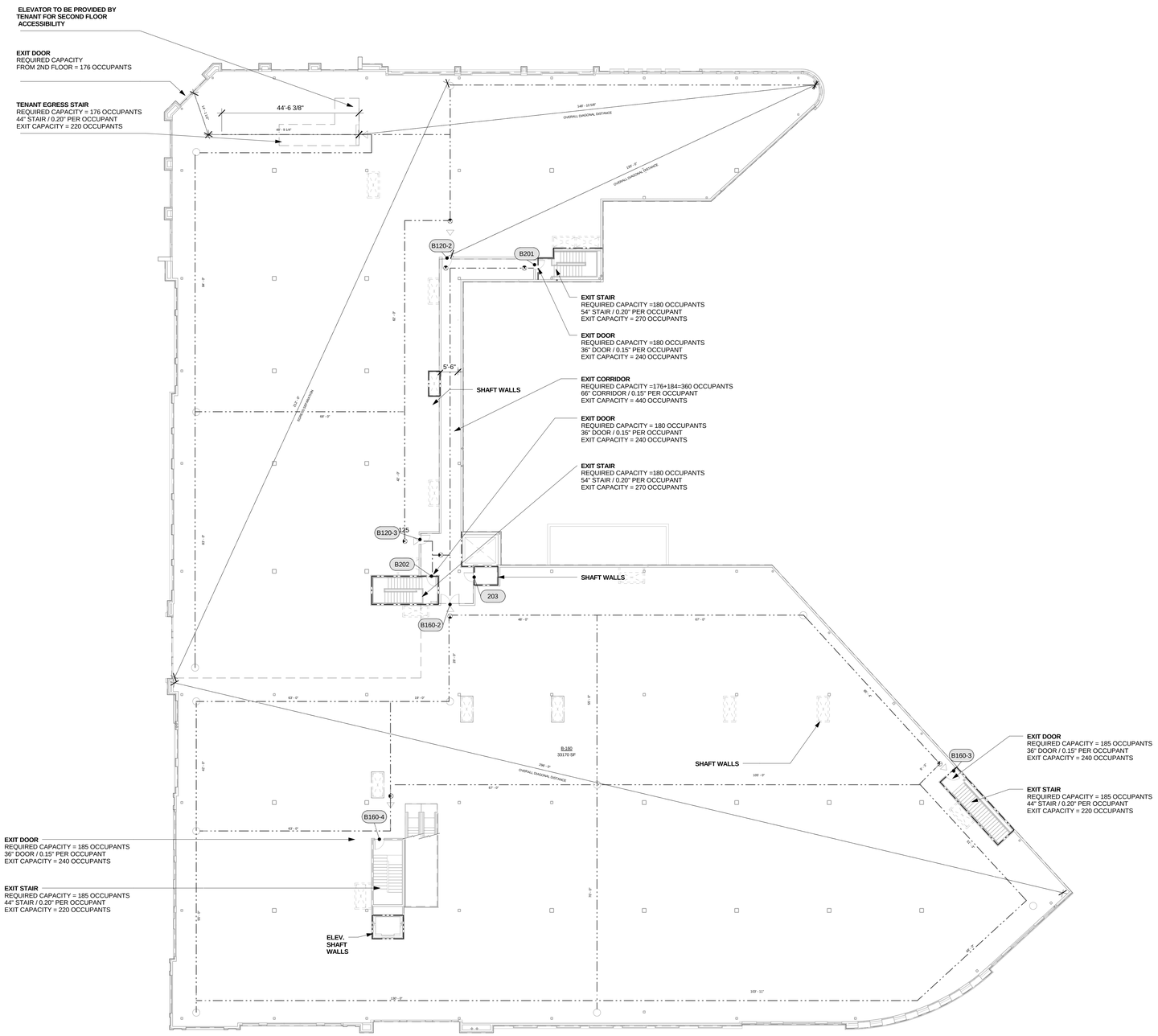

1 G1202 LIFE SAFETY PLAN - LEVEL 2

Scale: 1/16" = 1'-0"

N PROJECT

N TRUE

INTERNATIONAL BUILDING CODE
ICC 2012 W/ AMENDMENTS

CODE ANALYSIS

CONSTRUCTION TYPE
TYPE IIB
SPRINKLERED:YES

BUILDING HEIGHT AND AREA (SECTION 503 GENERAL)
ALLOWABLE FLOOR AREA: UNLIMITED AREA BUILDING PER SECTION 507.4
2 STORY BUILDING - SURROUNDED AND ADJOINED BY
PUBLIC WAYS NOT LESS THAN 60 FEET IN WIDTH

ALLOWABLE STORIES: 2
ACTUAL BUILDING FLOOR AREA: 155,870 SF
ACTUAL COVERED AREA: 3544 SF
ACTUAL TOTAL AREA: 159,414 SF
ACTUAL STORIES: 2 (0NE STORY)

OCCUPANCY: M

SECTION 507.4:

FIRE SEPARATION LEGEND:

ONE HOUR SEPARATION

EGRESS TRAVEL PATH

BUILDING CODE EXIT REQUIREMENTS

1. MAXIMUM TRAVEL DISTANCES (PER TABLE 1016.1):
   - A, M, R.....250 FT (W/ SPRINKLERS)
   - B.....300 FT (W/ SPRINKLERS)
   - S-2.....400 FT (W/ SPRINKLERS)
2. DEAD END CORRIDORS (PER SECTION 1018.4): 20 FT (EXCEPT 50 FT FOR OCCUPANCIES B, M, R, AND S W/ SPRINKLERS)
3. MINIMUM EXIT DOOR WIDTH: 36" MINIMUM EXIT STAIR WIDTH: 44"
4. DOOR WIDTH INDICATES WIDTH OF DOOR LEAF. STAIR WIDTH INDICATES WIDTH OF TREADS.
5. SINGLE MEANS OF EGRESS FROM DWELLING UNIT PERMITTED PER TABLE 1015.1 (100 OCCUP. MAX.)
6. THE CAPACITY OF EXITS CALCULATED AS FOLLOWS (PER SECTION 1005.3):
   - STAIRS AND OTHER VERTICAL EXITS: 0.20" PER PERSON
   - DOORS AND HORIZONTAL EXITS: 0.15" PER PERSON
7. OCCUPANCY CALCULATED AS FOLLOWS (PER TABLE 1004.1.2):
   BUSINESS AREAS.....100 SF PER PERSON
   MERCANTILE (BASEMENT & GRADE).....30 SF PER PERSON
   MERCANTILE (OTHER FLOORS).....60 SF PER PERSON
   MERCANTILE (LOADING / STORAGE).....300 SF PER PERSON
   MECHANICAL ROOMS.....300 SF PER PERSON

   ASSEMBLY, CONCENTRATED.....7 SF PER PERSON (NET)
   ASSEMBLY, UNCONCENTRATED.....15 SF PER PERSON (NET)
   PARKING GARAGES.....200 SF PER PERSON
   RESIDENTIAL UNITS.....200 SF PER PERSON
8. SWING OF EXIT DOORS IN THE DIRECTION OF EGRESS.
9. EGRESS HEADROOM: 7'-6" MIN. STAIRS AND DOORS HEADROOM: 6'-8" MIN.

Means of Egress Calculation

Name	Square Footage	Load Factor	No. Occupants	No. of Exits	Required Capacity/ Per Door	Egress Capacity Factor	Req. Exit Width (IN)
BLDG B - LEVEL 1-30.5							
B-100	2357 SF	30	79	2	40	0.15	6
ELECTRICAL ROOM	408 SF	30	14	1	14	0.15	3
WATER METER ROOM	94 SF	30	4	1	4	0.15	1
B-105	1487 SF	30	50	2	25	0.15	4
B-123	1410 SF	30	47	2	24	0.15	4
B-128	5027 SF	30	168	2	84	0.15	13
B-138	2786 SF	30	93	2	47	0.15	8
B-140	2633 SF	30	88	2	44	0.15	7
B-150	2805 SF	30	94	2	47	0.15	8
B-160	1248 SF	30	42	2	21	0.15	4
B-165	13254 SF	30	442	2	221	0.15	34
B-170	6549 SF	30	219	2	110	0.15	17
B-175	2819 SF	30	94	3	31	0.15	5
TRASH / PALLET STOR	345 SF	0		1		0	
DOCK MAN. OFFICE	177 SF			1			
B-110	1493 SF	30	50	2	25	0.15	4
B-115	2033 SF	30	68	2	34	0.15	6
B-125	2414 SF	30	81	2	41	0.15	7
B-130	2687 SF	30	90	2	45	0.15	7
B-135	1250 SF	30	42	1	42	0.15	7
B-145	1477 SF	30	50	1	50	0.15	8
B-120	1458 SF	30	49	1	49	0.15	8
B 106-2	214 SF						
BLDG B - LEVEL 2							
B-120	20762 SF	60	347	2	174	0.15	27
B-160	33170 SF	60	553	3	184	0.15	28
VERTICAL CIRCULATION	679 SF						
Area	1202 SF						
STAIR	205 SF						

EXIT DOOR CAPACITY

Mark	Width	Actual Capacity
B105	36	240
B104	48	320
B130	72	480
B128-2	36	240
B128-2	36	240
B160-3	36	240
B175-2	36	240
B160-1	36	240
B103	36	240
B102	36	240
B101	36	240
B150-1	72	480
B100-1	72	480
B175-1	72	480
B170-3	36	240
B201	36	240
B170-1	73	488
B165-3	36	240
B160-2	72	480
B120-3	36	240
B130-1	72	480
B128-1	72	480
B138-1	72	480
B140-1	72	480
B120-1	72	480
B110-1	72	480
B150-3	43	285
B130-2	36	240
B140-2	36	240
B202	36	240
B138-2	36	240
B120-2	36	240
B101	36	240
B160-4	36	240
B145-2	36	240
B107	36	240
B160-2	72	480
B106	72	480
B160-6	73	485
B160-10	173	1150
B160-5	164	1093
B170-2	72	480
B108	36	240
B120-4	168	1120
B120-6	168	1120
B120-5	36	240
B120-7	36	240
B120-8	72	480

CLIENT

CENTERCAL PROPERTIES, LLC

COPYRIGHT:

Any reproduction or distribution for any purpose other than authorized by IBI Group is forbidden. Written dimensions shall have precedence over scaled dimensions. Contractors shall verify and be responsible for all dimensions and conditions on the job, and report any errors or omissions to the consultant then the dimensions and conditions shown on the drawing. Shop drawings shall be submitted to IBI Group for approval before proceeding with fabrication.

COPYRIGHT © 2016 IBI GROUP

ISSUES

NO.	ISSUANCE	STATUS	DATE
1	PROGRESS SET		5/26/2016

SEAL

10759 REGISTERED ARCHITECT

CRAIG ROTHENBURGER
STATE OF WASHINGTON

SUB CONSULTANT

PRIME CONSULTANT

IBI
ibigroup.com

PROJECT

The Village at Totem Lake - Building B
Kirkland, Washington

PROJECT NO:	Building B
DRAWN BY:	Author
CHKD' BY:	Checker
SCALE:	As indicated
DATE:	05/26/2016

SHEET TITLE

EGRESS & FIRE SEPARATION DIAGRAMS - LEVEL 2

BLDG	SHEET NUMBER	ISSUE
B	G1202	

C:\Users\bjan.shoeleh\Documents\ATW_Totem_B\bjan.shoeleh.rvt

5/26/2016 6:49:05 PM

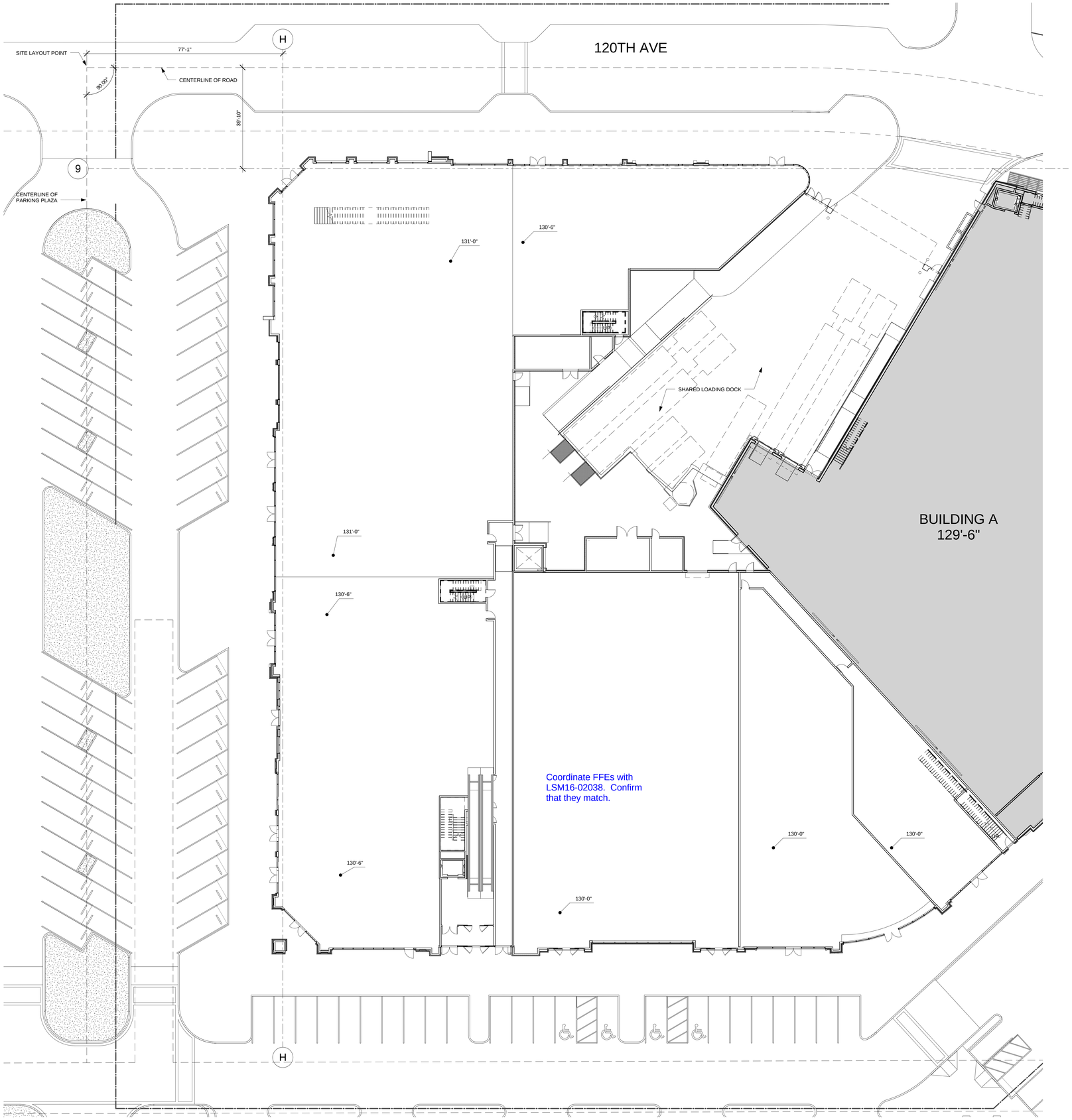

1 A1001 SITE PLAN
Scale: 1/16" = 1'-0"

N PROJECT

N TRUE

SITE PLAN NOTES

1. REFER TO LANDSCAPE DRAWINGS FOR LANDSCAPE DESIGN AND DETAILS-LANDSCAPE REMOVED FOR CLARITY
2. REFER TO CIVIL DRAWINGS FOR CURB CUTS PARKING LAYOUTS AND PAVING PATTERNS
3. OVERALL SITE PLAN SHOWN FOR REFERENCE ONLY.
4. SCOPE OF WORK IS WITHIN LIMITS OF BOUNDARY LINE.

CLIENT

CENTERCAL PROPERTIES, LLC

COPYRIGHT:

Any reproduction or distribution for any purpose other than authorized by IBI Group is forbidden. Written dimensions shall have precedence over scaled dimensions. Contractors shall verify and be responsible for all dimensions and conditions on the job, and report any errors, omissions or conflicts from the dimensions and conditions shown on the drawing. Shop drawings shall be submitted to IBI Group for approval before proceeding with fabrication.

COPYRIGHT © 2016 IBI GROUP

ISSUES

NO.	ISSUANCE	STATUS	DATE
1	PROGRESS SET		5/26/2016

SEAL

10759 REGISTERED ARCHITECT
CRAIG ROTHENBURGER
STATE OF WASHINGTON

SUB CONSULTANT

PRIME CONSULTANT

IBI
ibigroup.com

PROJECT

The Village at Totem Lake - Building B
Kirkland, Washington

PROJECT NO:	Building B
DRAWN BY:	Author
CHKD' BY:	Checker
SCALE:	As indicated
DATE:	05/26/2016

SHEET TITLE

SITE PLAN

BLDG	SHEET NUMBER	ISSUE
B	A1001	

C:\Users\bjan.shoieh\Documents\ATW_Totem_B\bjgB_A_2016_Bjan.shoieh.rvt

5/26/2016 6:57:27 PM

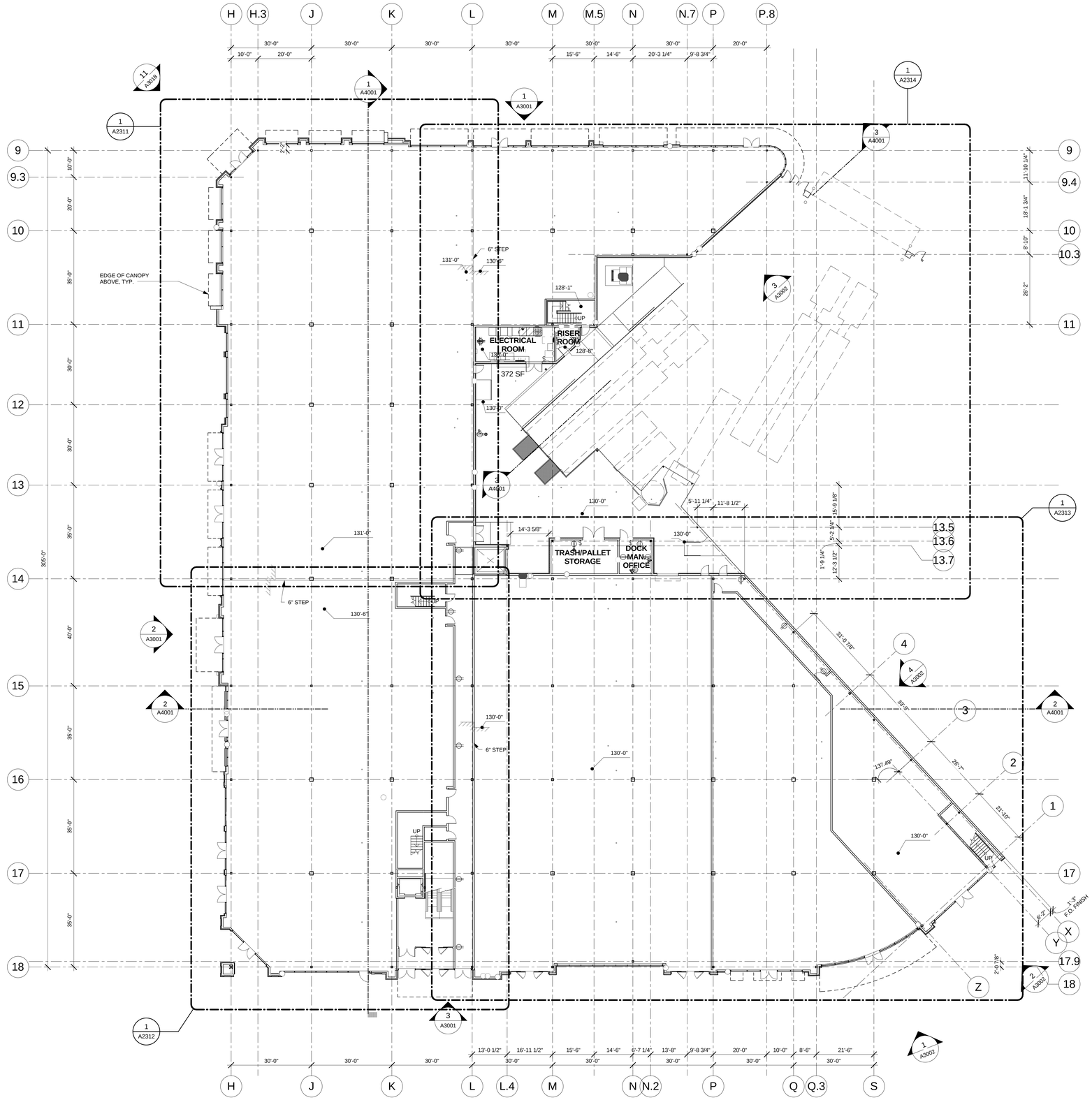

1 OVERALL FIRST FLOOR PLAN
A2101 Scale: 1/16" = 1'-0"

N PROJECT
N TRUE

CLIENT

CENTERCAL PROPERTIES, LLC

COPYRIGHT:

Any reproduction or distribution for any purpose other than authorized by IBI Group is forbidden. Written dimensions shall have precedence over scaled dimensions. Contractors shall verify and be responsible for all dimensions and conditions on the job, and report any errors or omissions to the architect then the dimensions and conditions shown on the drawing. Shop drawings shall be submitted to IBI Group for approval before proceeding with fabrication.

COPYRIGHT © 2016 IBI GROUP

ISSUES

NO.	ISSUANCE	STATUS	DATE
1	PROGRESS SET		5/26/2016

SEAL

10759 REGISTERED ARCHITECT
CRAIG ROTHENBURGER
STATE OF WASHINGTON

SUB CONSULTANT

PRIME CONSULTANT

IBI
ibigroup.com

PROJECT
The Village at Totem Lake - Building B
Kirkland, Washington

PROJECT NO:	Building B
DRAWN BY:	Author
CHKD' BY:	Checker
SCALE:	1/16" = 1'-0"
DATE:	05/26/2016

SHEET TITLE
OVERALL FIRST FLOOR PLAN

BLDG	SHEET NUMBER	ISSUE
B	A2101	

C:\Users\bjan.shoieh\Documents\ATW_Totem_Bldg\B_A_2016_bjan.shoieh.rvt

5/26/2016 5:57:32 PM

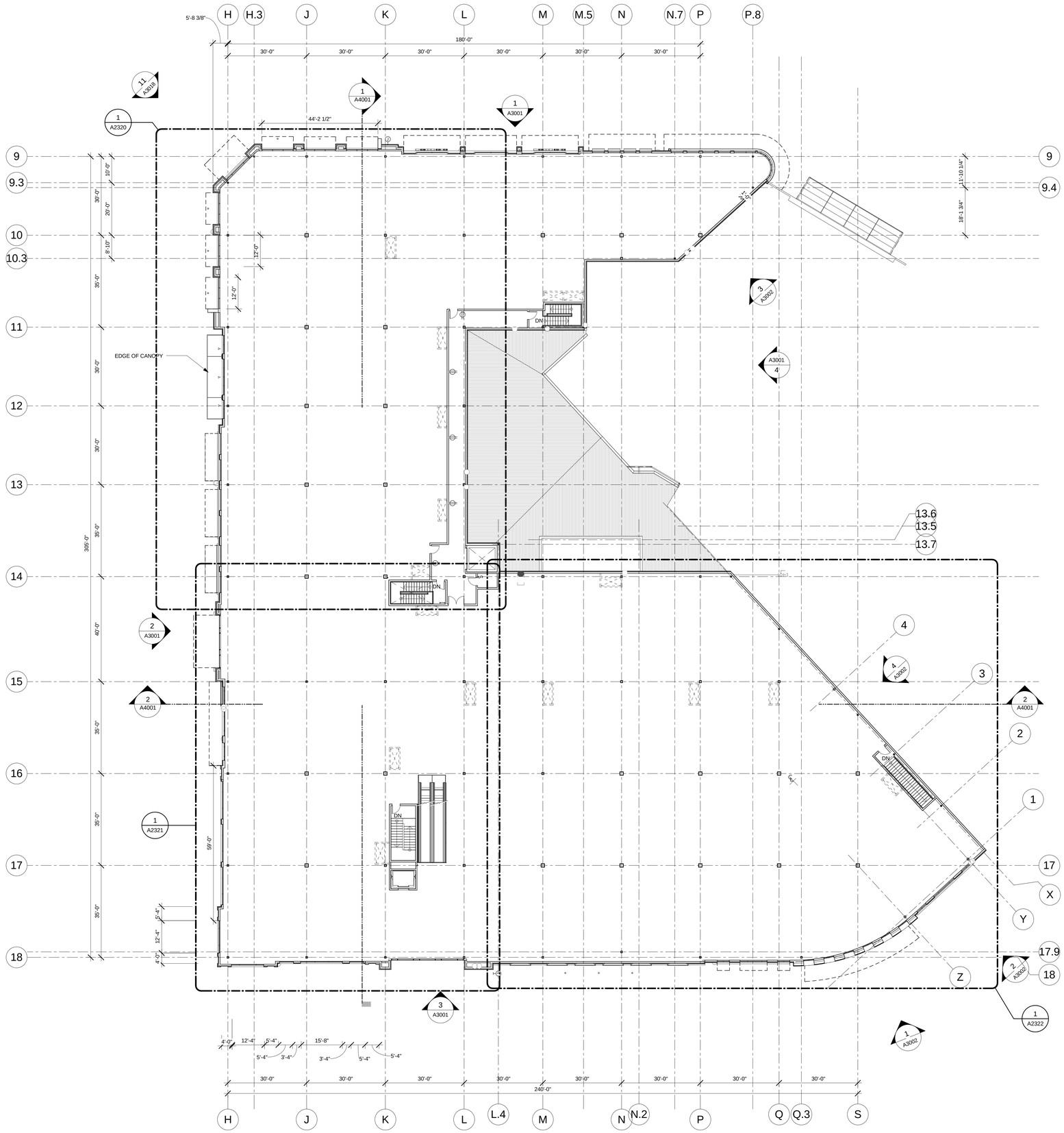

1 OVERALL SECOND FLOOR PLAN
A2102 Scale: 1/16" = 1'-0"

N PROJECT
N TRUE

CLIENT

CENTERCAL PROPERTIES, LLC

COPYRIGHT:

Any reproduction or distribution for any purpose other than authorized by IBI Group is forbidden. Written dimensions shall have precedence over scaled dimensions. Contractors shall verify and be responsible for all dimensions and conditions on the job, and report any errors, omissions or conflicts in the dimensions and conditions shown on the drawing. Shop drawings shall be submitted to IBI Group for approval before proceeding with fabrication.

COPYRIGHT © 2016 IBI GROUP

ISSUES

NO.	ISSUANCE	STATUS	DATE
1	PROGRESS SET		5/26/2016

SEAL

10759 REGISTERED ARCHITECT
CRAIG ROTHENBURGER
STATE OF WASHINGTON

SUB CONSULTANT

PRIME CONSULTANT

IBI
ibigroup.com

PROJECT

The Village at Totem Lake - Building B
Kirkland, Washington

PROJECT NO:	Building B
DRAWN BY:	Author
CHKD' BY:	Checker
SCALE:	1/16" = 1'-0"
DATE:	05/26/2016

SHEET TITLE

OVERALL SECOND FLOOR PLAN

BLDG	SHEET NUMBER	ISSUE
B	A2102	

C:\Users\bjan.shoieh\Documents\ATW_Totem_BldgB_A_2016_Bjan.shoieh.rvt

5/26/2016 6:57:37 PM

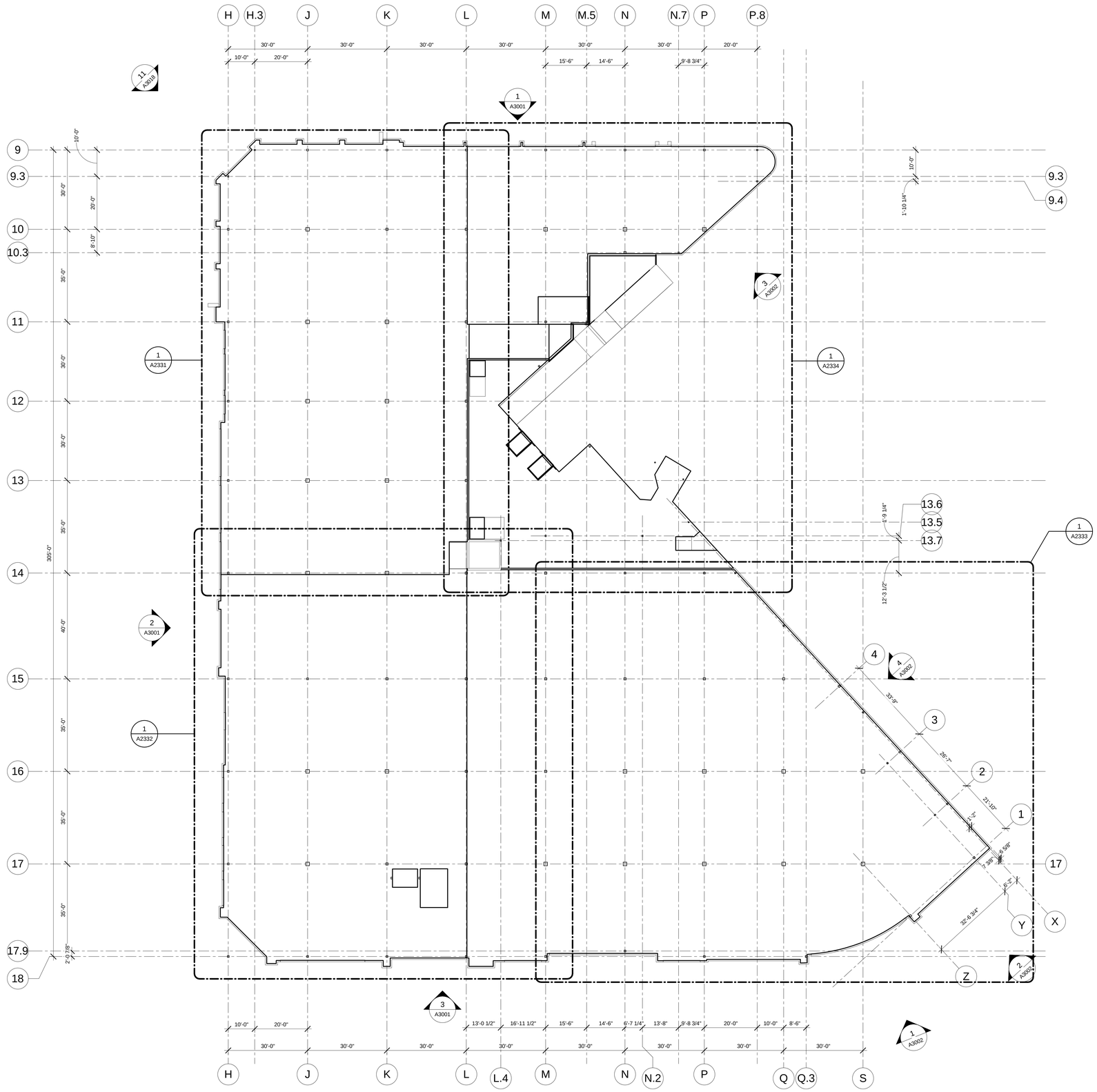

1 A2201 SLAB EDGE PLAN - LEVEL 1

Scale: 1/16" = 1'-0"

N PROJECT

N TRUE

SLAB EDGE PLAN LEGEND

SHAFT OPENING LOCATION

SLAB STEP

CLIENT

CENTERCAL PROPERTIES, LLC

COPYRIGHT:

Any reproduction or distribution for any purpose other than authorized by IBI Group is forbidden. Written dimensions shall have precedence over scaled dimensions. Contractors shall verify and be responsible for all dimensions and conditions on the job, and report any errors or omissions to the architect then the dimensions and conditions shown on the drawing. Shop drawings shall be submitted to IBI Group for approval before proceeding with fabrication.

COPYRIGHT © 2016 IBI GROUP

ISSUES

NO.	ISSUANCE	STATUS	DATE
1	PROGRESS SET		5/26/2016

SEAL

10759 REGISTERED ARCHITECT

CRAIG ROTHENBURGER
STATE OF WASHINGTON

SUB CONSULTANT

PRIME CONSULTANT

IBI
ibigroup.com

PROJECT

The Village at Totem Lake - Building B
Kirkland, Washington

PROJECT NO:	Building B
DRAWN BY:	Author
CHKD' BY:	Checker
SCALE:	1/16" = 1'-0"
DATE:	05/26/2016

SHEET TITLE

OVERALL FIRST FLOOR SLAB EDGE PLAN

BLDG	SHEET NUMBER	ISSUE
B	A2201	

C:\Users\bjan.shoaib\Documents\ATW_Totem_B\bjgB_A_2016_bjan.shoaib.rvt

5/26/2016 6:57:38 PM

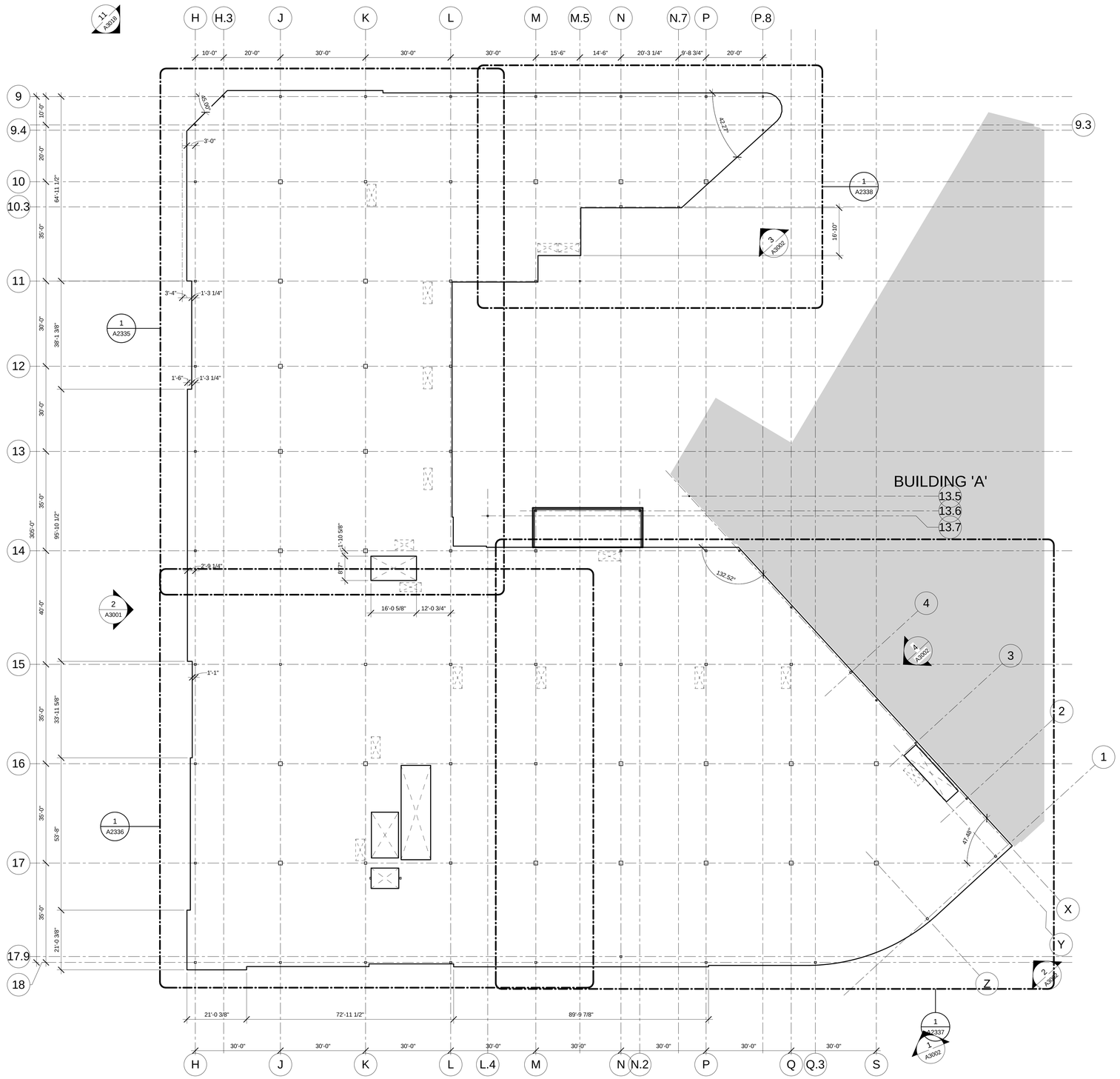

1 A2202 OVERALL SECOND FLOOR PLAN SLAB PLAN
Scale: 1/16" = 1'-0"

N PROJECT

N TRUE

SLAB EDGE PLAN LEGEND

SHAFT OPENING LOCATION

SLAB STEP

CLIENT

CENTERCAL PROPERTIES, LLC

COPYRIGHT:

Any reproduction or distribution for any purpose other than authorized by IBI Group is forbidden. Written dimensions shall have precedence over scaled dimensions. Contractors shall verify and be responsible for all dimensions and conditions on the job, and report any errors or omissions to the architect before the dimensions and conditions shown on the drawing. Shop drawings shall be submitted to IBI Group for approval before proceeding with fabrication.

COPYRIGHT © 2016 IBI GROUP

ISSUES

NO.	ISSUANCE	STATUS	DATE
1	PROGRESS SET		5/26/2016

SEAL

10759 REGISTERED ARCHITECT
CRAIG ROTHENBURGER
STATE OF WASHINGTON

SUB CONSULTANT

PRIME CONSULTANT

IBI
ibigroup.com

PROJECT
The Village at Totem Lake - Building B
Kirkland, Washington

PROJECT NO:	Building B
DRAWN BY:	Author
CHKD' BY:	Checker
SCALE:	1/16" = 1'-0"
DATE:	05/26/2016

SHEET TITLE
OVERALL SECOND FLOOR SLAB EDGE PLAN

BLDG	SHEET NUMBER	ISSUE
B	A2202	

C:\Users\bjan.shoesh\Documents\ATW_Totem_B16qB_A_2016_bjan.shoesh.rvt

5/26/2016 6:57:40 PM

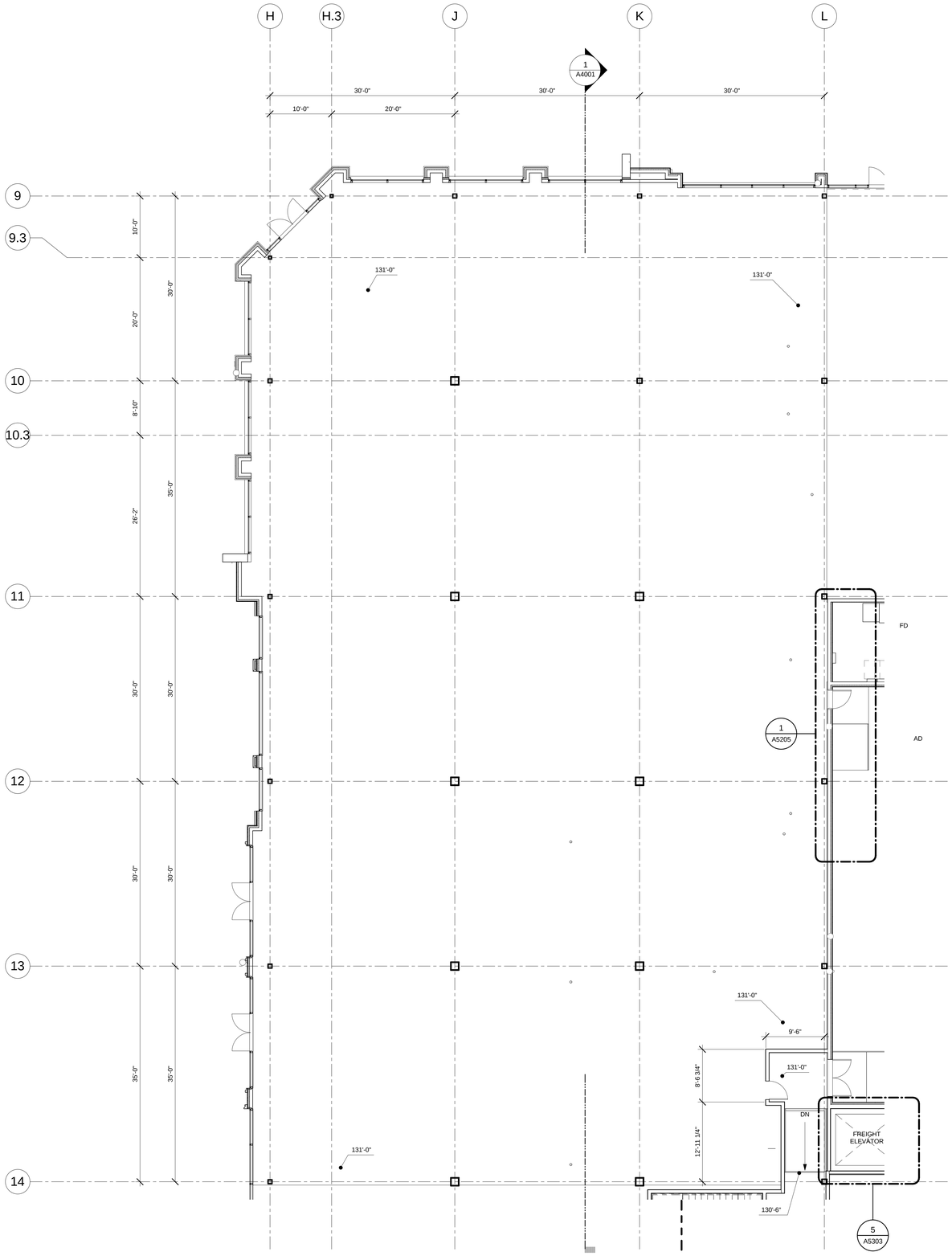

1 A2311 FIRST FLOOR PLAN - EAST

Scale: 1/8" = 1'-0"

N PROJECT

N TRUE

CLIENT

CENTERCAL PROPERTIES, LLC

COPYRIGHT:

Any reproduction or distribution for any purpose other than authorized by IBI Group is forbidden. Written dimensions shall have precedence over scaled dimensions. Contractors shall verify and be responsible for all dimensions and conditions on the job, and report any errors, omissions or conflicts from the dimensions and conditions shown on the drawing. Shop drawings shall be submitted to IBI Group for approval before proceeding with fabrication.

COPYRIGHT © 2016 IBI GROUP

ISSUES

NO.	ISSUANCE	STATUS	DATE
1	PROGRESS SET		5/26/2016

SEAL

10759 REGISTERED ARCHITECT

CRAIG ROTHENBURGER
STATE OF WASHINGTON

SUB CONSULTANT

PRIME CONSULTANT

IBI
ibigroup.com

PROJECT

The Village at Totem Lake - Building B
Kirkland, Washington

PROJECT NO:	Building B
DRAWN BY:	Author
CHKD' BY:	Checker
SCALE:	1/8" = 1'-0"
DATE:	05/26/2016

SHEET TITLE

FIRST FLOOR PLAN - NORTHEAST

BLDG	SHEET NUMBER	ISSUE
B	A2311	

C:\Users\bjan.shoieh\Documents\ATW_Totem_BldgB_A_2016_bjan.shoieh.rvt

5/26/2016 6:57:42 PM

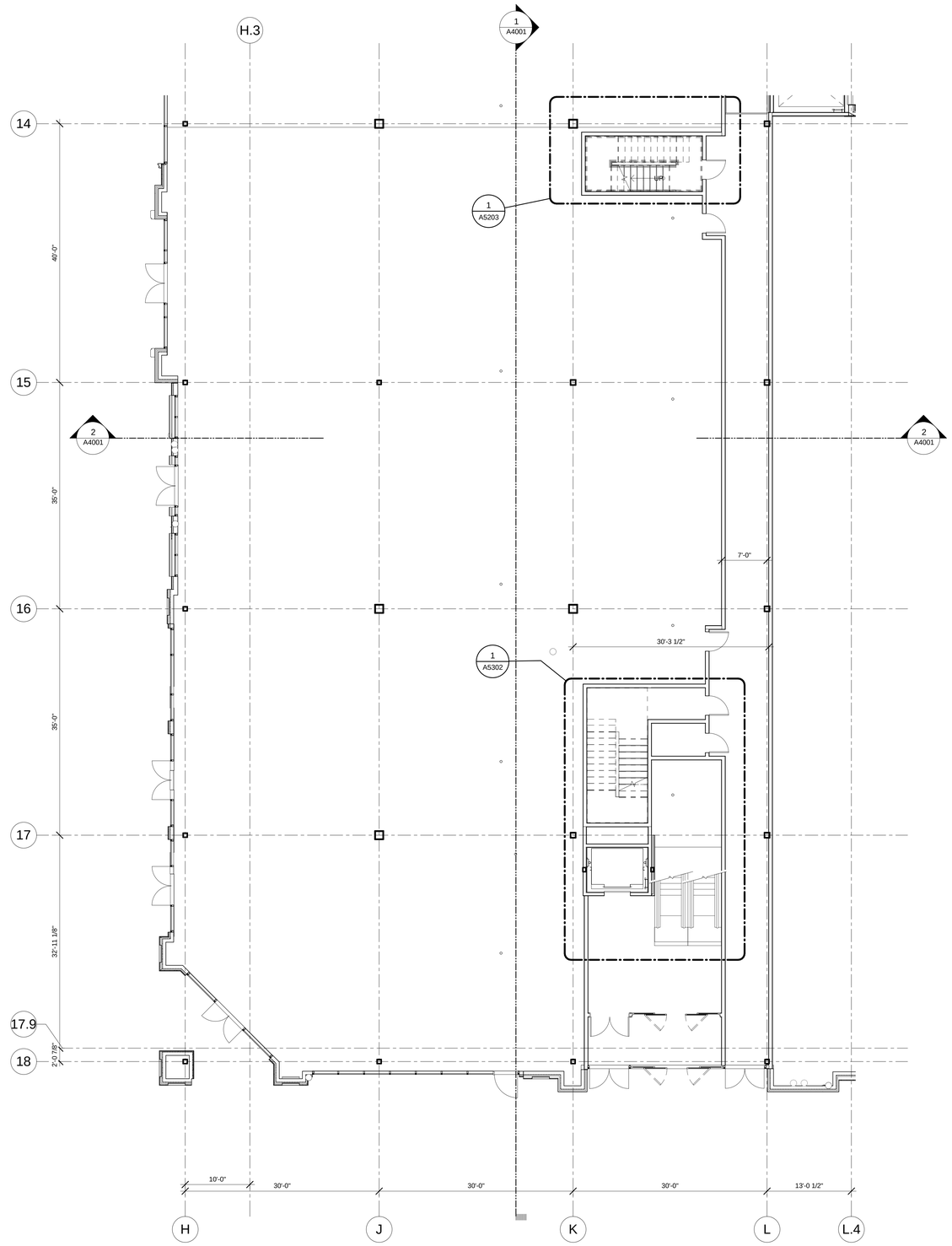

N PROJECT

N TRUE

1 A2312 FIRST FLOOR PLAN - NORTHWEST

Scale: 1/8" = 1'-0"

5/26/2016 6:57:44 PM

C:\Users\bjaya.shoyele\Documents\ATW_Totem_Bldg B_A_2016_bjaya.shoeleh.rvt

CLIENT

CENTERCAL PROPERTIES, LLC

COPYRIGHT:

Any reproduction or distribution for any purpose other than authorized by IBI Group is forbidden. Written dimensions shall have precedence over scaled dimensions. Contractors shall verify and be responsible for all dimensions and conditions on the job, and IBI Group must be informed of any variations from the dimensions and conditions shown on the drawing. Shop drawings shall be submitted to IBI Group for approval before proceeding with fabrication.

COPYRIGHT © 2016 IBI GROUP

ISSUES

NO.	ISSUANCE	STATUS	DATE
1	PROGRESS SET		5/26/2016

SEAL

10759 REGISTERED ARCHITECT

CRAIG ROTHENBURGER
STATE OF WASHINGTON

SUB CONSULTANT

PRIME CONSULTANT

IBI

ibigroup.com

PROJECT

The Village at Totem Lake - Building B

Kirkland, Washington

PROJECT NO:	Building B
DRAWN BY:	Author
CHKD' BY:	Checker
SCALE:	1/8" = 1'-0"
DATE:	05/26/2016

SHEET TITLE

FIRST FLOOR PLAN - NORTHWEST

BLDG	SHEET NUMBER	ISSUE
B	A2312	

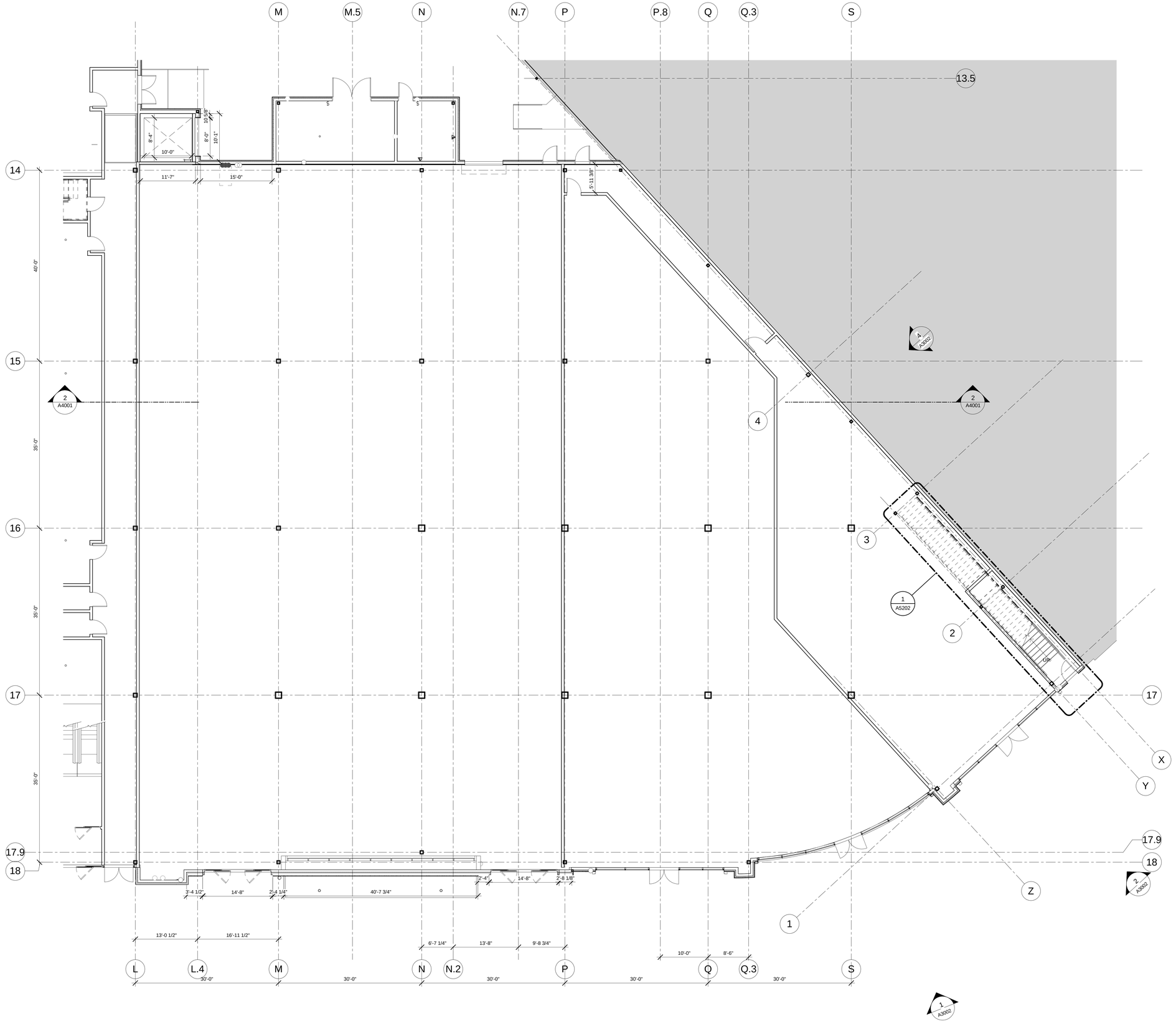

1 A2313 FIRST FLOOR PLAN - SOUTHWEST
Scale: 1/8" = 1'-0"

CLIENT

CENTERCAL PROPERTIES, LLC

COPYRIGHT:

Any reproduction or distribution for any purpose other than authorized by IBI Group is forbidden. Written dimensions shall have precedence over scaled dimensions. Contractors shall verify and be responsible for all dimensions and conditions on the job, and report any errors, omissions or conflicts in them the dimensions and conditions shown on the drawing. Shop drawings shall be submitted to IBI Group for approval before proceeding with fabrication.

COPYRIGHT © 2016 IBI GROUP

ISSUES

NO.	ISSUANCE	STATUS	DATE
1	PROGRESS SET		5/26/2016

SEAL

10759 REGISTERED ARCHITECT
CRAIG ROTHENBURGER
STATE OF WASHINGTON

SUB CONSULTANT

PRIME CONSULTANT

IBI
ibigroup.com

PROJECT
The Village at Totem Lake - Building B
Kirkland, Washington

PROJECT NO:	Building B
DRAWN BY:	Author
CHKD' BY:	Checker
SCALE:	1/8" = 1'-0"
DATE:	05/26/2016

SHEET TITLE
FIRST FLOOR PLAN - SOUTHWEST

BLDG	SHEET NUMBER	ISSUE
B	A2313	

C:\Users\bjan.shoeleh\Documents\ATW_Totem_Bldg B_A_2016_bjan.shoeleh.rvt

5/26/2016 6:57:53 PM

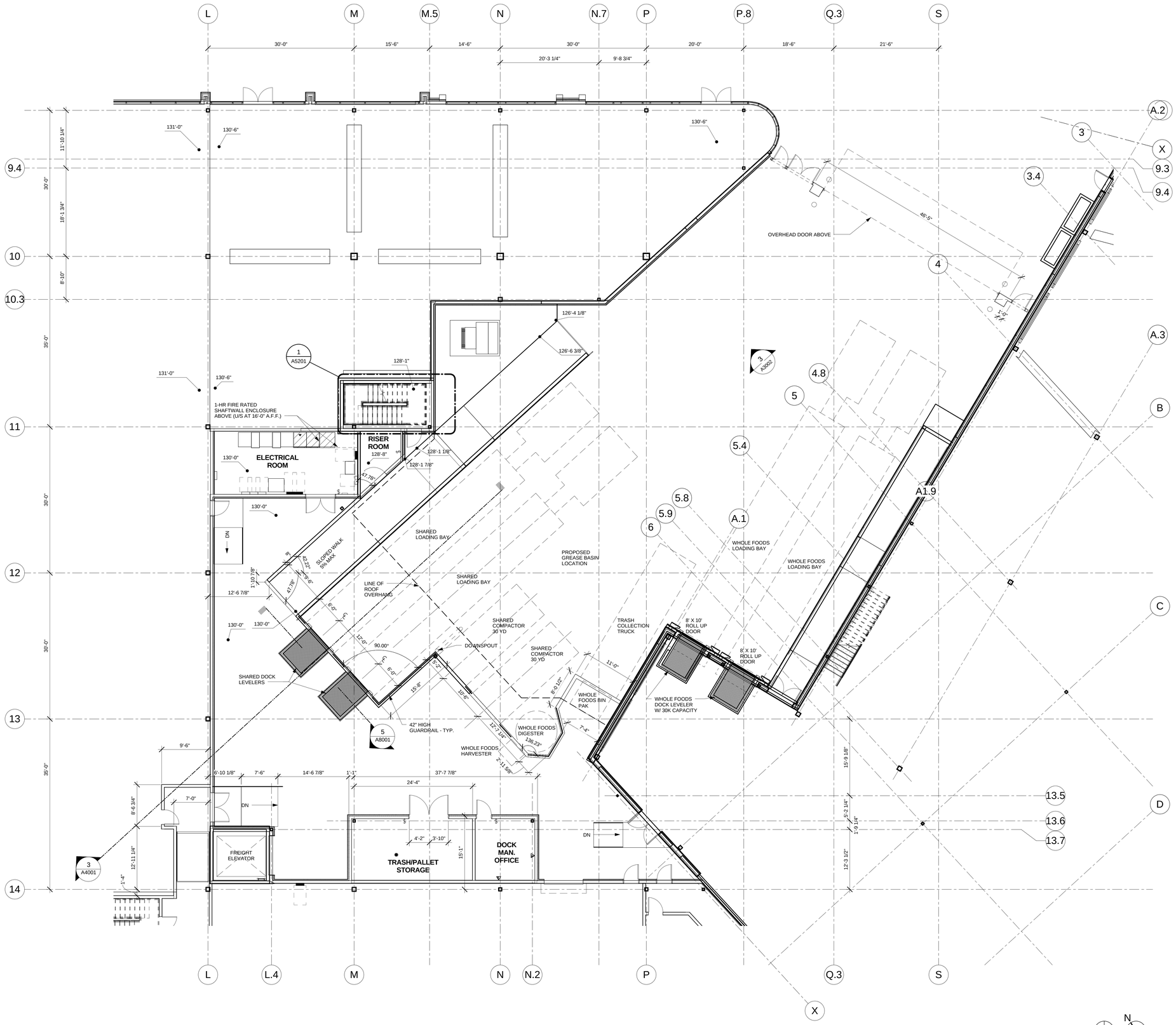

1 A2314 LOADING DOCK PLAN
Scale: 1/8" = 1'-0"

C:\Users\bjan.shoeleh\Documents\ATW_Totem_Bldg B_A_2016_bjan.shoeleh.rvt

5/26/2016 6:57:57 PM

CLIENT

CENTERCAL PROPERTIES, LLC

COPYRIGHT:

Any reproduction or distribution for any purpose other than authorized by IBI Group is forbidden. Written dimensions shall have precedence over scaled dimensions. Contractors shall verify and be responsible for all dimensions and conditions on the job, and report any errors or omissions to the architect from the dimensions and conditions shown on the drawing. Shop drawings shall be submitted to IBI Group for approval before proceeding with fabrication.

COPYRIGHT © 2016 IBI GROUP

ISSUES

NO.	ISSUANCE	STATUS	DATE
1	PROGRESS SET		5/26/2016

SEAL

10759 REGISTERED ARCHITECT
CRAIG ROTHENBURGER
STATE OF WASHINGTON

SUB CONSULTANT

PRIME CONSULTANT

IBI
ibigroup.com

PROJECT
The Village at Totem Lake - Building B
Kirkland, Washington

PROJECT NO:	Building B
DRAWN BY:	Author
CHKD' BY:	Checker
SCALE:	1/8" = 1'-0"
DATE:	05/26/2016

SHEET TITLE
FIRST FLOOR PLAN - SOUTHEAST (LOADING DOCK)

BLDG	SHEET NUMBER	ISSUE
B	A2314	

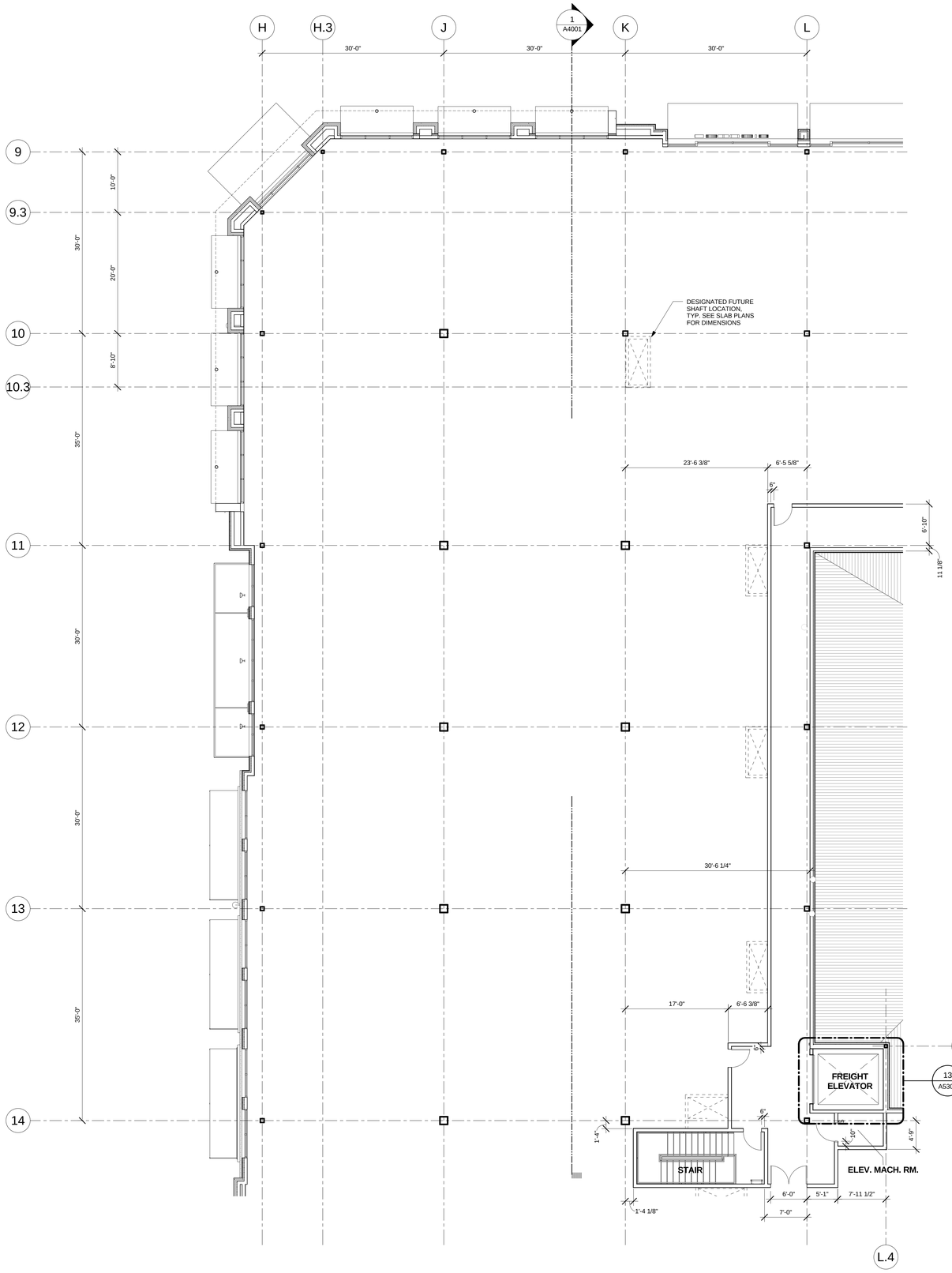

1 / A2320 SECOND FLOOR PLAN - EAST
Scale: 1/8" = 1'-0"

CLIENT

CENTERCAL PROPERTIES, LLC

COPYRIGHT:

Any reproduction or distribution for any purpose other than authorized by IBI Group is forbidden. Written dimensions shall have precedence over scaled dimensions. Contractors shall verify and be responsible for all dimensions and conditions on the job, and report any errors or omissions to the architect then the dimensions and conditions shown on the drawing. Shop drawings shall be submitted to IBI Group for approval before proceeding with fabrication.

COPYRIGHT © 2016 IBI GROUP

ISSUES

NO.	ISSUANCE	STATUS	DATE
1	PROGRESS SET		5/26/2016

SEAL

10759 REGISTERED ARCHITECT
CRAIG ROTHENBURGER
STATE OF WASHINGTON

SUB CONSULTANT

PRIME CONSULTANT

IBI
ibigroup.com

PROJECT
The Village at Totem Lake - Building B
Kirkland, Washington

PROJECT NO:	Building B
DRAWN BY:	Author
CHKD' BY:	Checker
SCALE:	1/8" = 1'-0"
DATE:	05/26/2016

SHEET TITLE
SECOND FLOOR PLAN - NORTHEAST

BLDG	SHEET NUMBER	ISSUE
B	A2320	

C:\Users\bjan.shoesh\Documents\ATW_Totem_B\bjgB_A_2016_bjan.shoesh.rvt

5/26/2016 6:57:58 PM

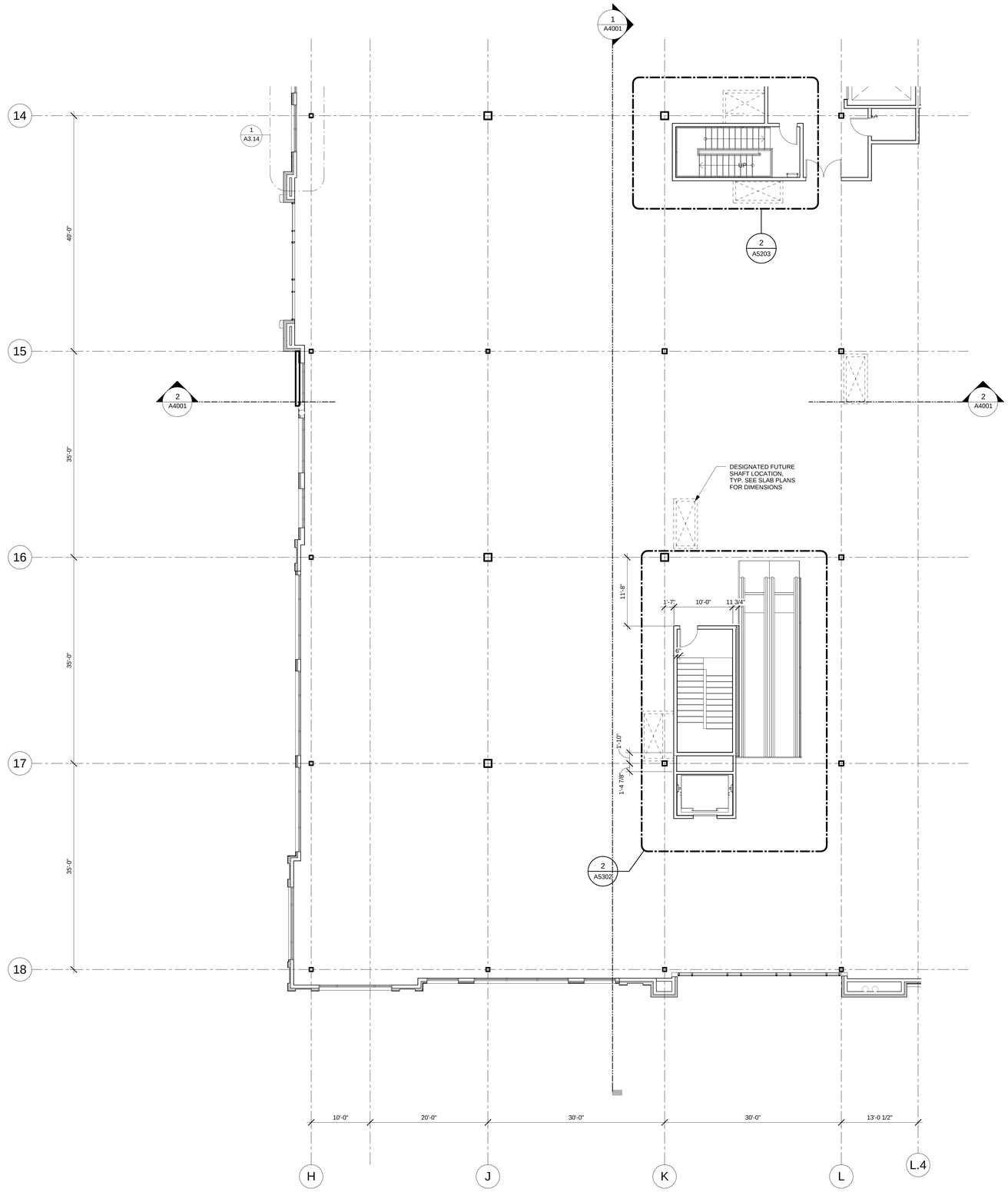

1 / A2321 SECOND FLOOR PLAN - NORTHWEST

Scale: 1/8" = 1'-0"

N PROJECT

N TRUE

CLIENT

CENTERCAL PROPERTIES, LLC

COPYRIGHT:

Any reproduction or distribution for any purpose other than authorized by IBI Group is forbidden. Written dimensions shall have precedence over scaled dimensions. Contractors shall verify and be responsible for all dimensions and conditions on this drawing. No ordinance, regulation or interpretation from the dimensions and conditions shown on the drawing. Shop drawings shall be submitted to IBI Group for approval before proceeding with fabrication.

COPYRIGHT © 2016 IBI GROUP

ISSUES

NO.	ISSUANCE	STATUS	DATE
1	PROGRESS SET		5/26/2016

SEAL

10759 REGISTERED ARCHITECT

CRAIG ROTHENBURGER
STATE OF WASHINGTON

SUB CONSULTANT

PRIME CONSULTANT

IBI
ibigroup.com

PROJECT

The Village at Totem Lake - Building B

Kirkland, Washington

PROJECT NO:	Building B
DRAWN BY:	Author
CHKD' BY:	Checker
SCALE:	1/8" = 1'-0"
DATE:	05/26/2016

SHEET TITLE

SECOND FLOOR PLAN - NORTHWEST

BLDG	SHEET NUMBER	ISSUE
B	A2321	

5/26/2016 6:58:00 PM C:\Users\bjain.shoeleh\Documents\ATW_Totem_Bldg B_A_2016_bjain.shoeleh.rvt

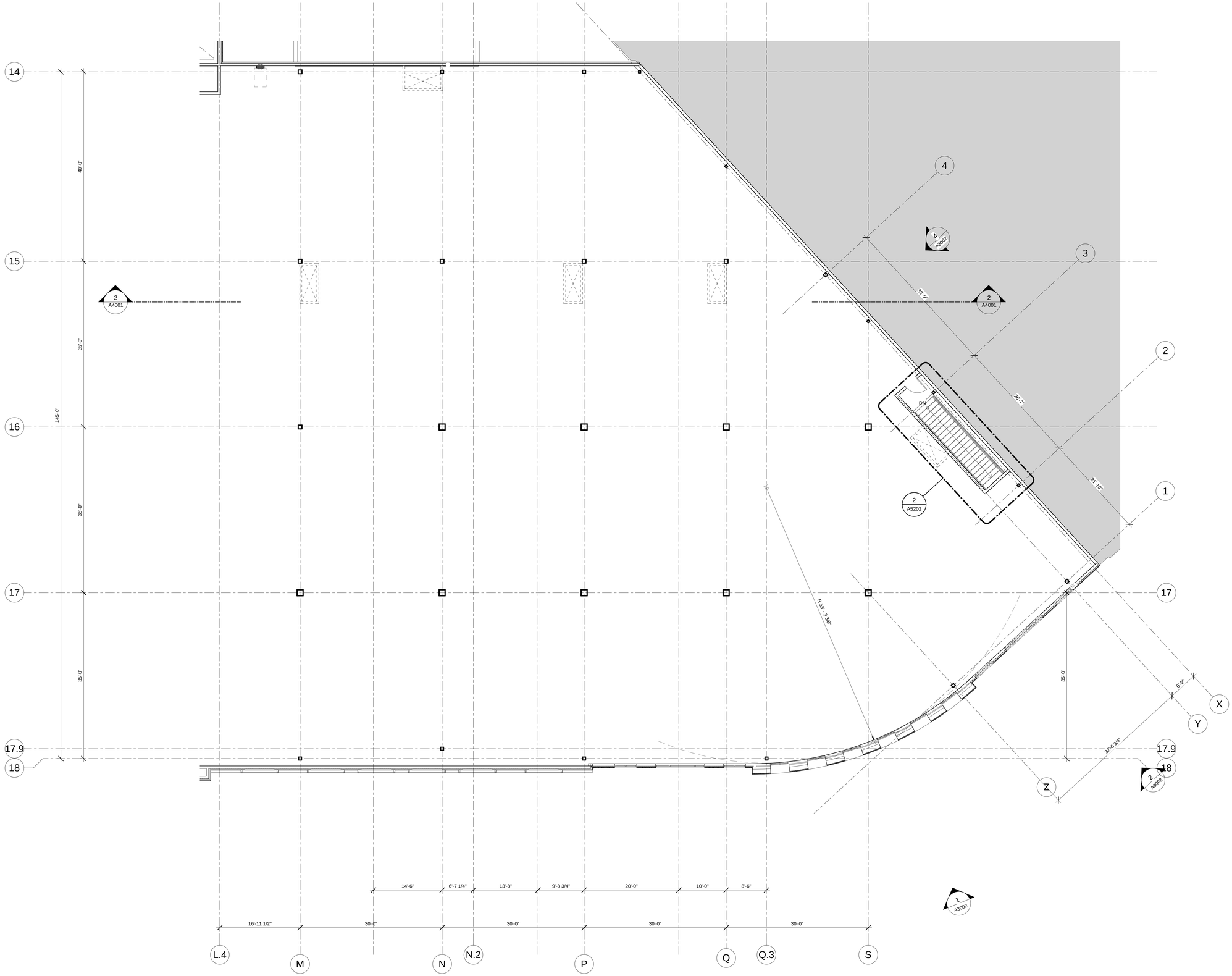

1 A2322 SECOND FLOOR PLAN - SOUTHWEST
Scale: 1/8" = 1'-0"

N PROJECT

N TRUE

5/26/2016 6:58:07 PM

C:\Users\tjaya.shoieb\Documents\ATW_Totem_Bldg B_A_2016_tjaya.shoieb.rvt

CLIENT

CENTERCAL PROPERTIES, LLC

COPYRIGHT:

Any reproduction or distribution for any purpose other than authorized by IBI Group is forbidden. Written dimensions shall have precedence over scaled dimensions. Contractors shall verify and be responsible for all dimensions and conditions on the job, and report any errors, omissions or conflicts in them the dimensions and conditions shown on the drawing. Shop drawings shall be submitted to IBI Group for approval before proceeding with fabrication.

COPYRIGHT © 2016 IBI GROUP

ISSUES

NO.	ISSUANCE	STATUS	DATE
1	PROGRESS SET		5/26/2016

SEAL

10759 REGISTERED ARCHITECT

CRAIG ROTHENBURGER
STATE OF WASHINGTON

SUB CONSULTANT

PRIME CONSULTANT

IBI
ibigroup.com

PROJECT

The Village at Totem Lake - Building B
Kirkland, Washington

PROJECT NO:	Building B
DRAWN BY:	Author
CHKD' BY:	Checker
SCALE:	1/8" = 1'-0"
DATE:	05/26/2016

SHEET TITLE

SECOND FLOOR PLAN - SOUTHWEST

BLDG	SHEET NUMBER	ISSUE
B	A2322	

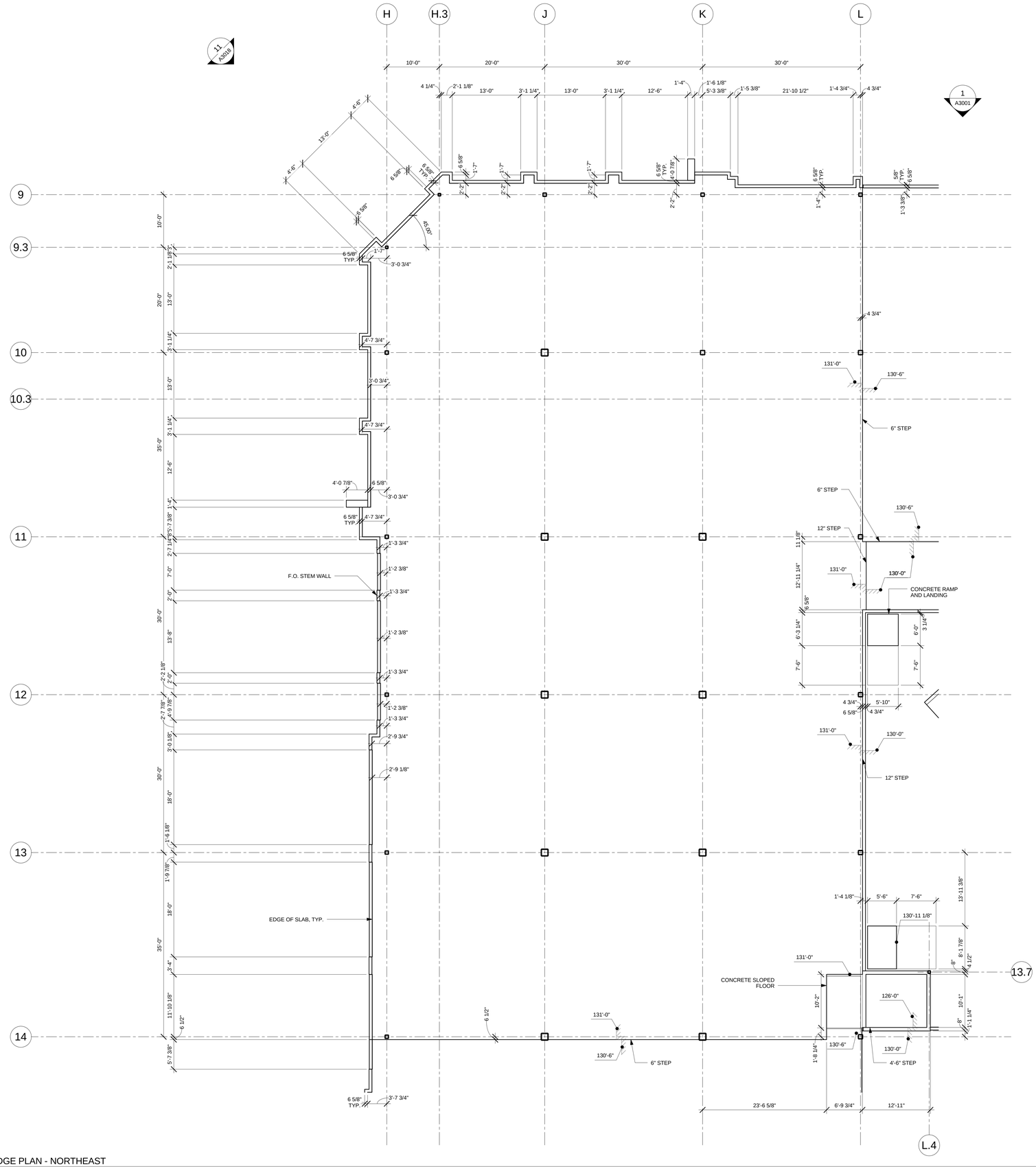

1 A2331 FIRST SLAB EDGE PLAN - NORTHEAST

Scale: 1/8" = 1'-0"

SLAB EDGE PLAN LEGEND

SHAFT OPENING LOCATION

SLAB STEP

CLIENT

CENTERCAL PROPERTIES, LLC

COPYRIGHT:

Any reproduction or distribution for any purpose other than authorized by IBI Group is forbidden. Written dimensions shall have precedence over scaled dimensions. Contractors shall verify and be responsible for all dimensions and conditions on the job, and report any errors, omissions or conflicts in them the dimensions and conditions shown on the drawing. Shop drawings shall be submitted to IBI Group for approval before proceeding with fabrication.

COPYRIGHT © 2016 IBI GROUP

ISSUES

NO.	ISSUANCE	STATUS	DATE
1	PROGRESS SET		5/26/2016

SEAL

10759 REGISTERED ARCHITECT

CRAIG ROTHENBURGER
STATE OF WASHINGTON

SUB CONSULTANT

PRIME CONSULTANT

IBI
ibigroup.com

PROJECT

The Village at Totem Lake - Building B

Kirkland, Washington

PROJECT NO:	Building B
DRAWN BY:	DC
CHKD' BY:	Checker
SCALE:	As indicated
DATE:	05/26/2016

SHEET TITLE

FIRST SLAB EDGE PLAN - NORTHEAST

BLDG	SHEET NUMBER	ISSUE
B	A2331	

C:\Users\bjajan.shrestha\Documents\ATW_Totem_Bldg\B_A_2016_bjajan.shrestha.rvt

5/26/2016 6:58:08 PM

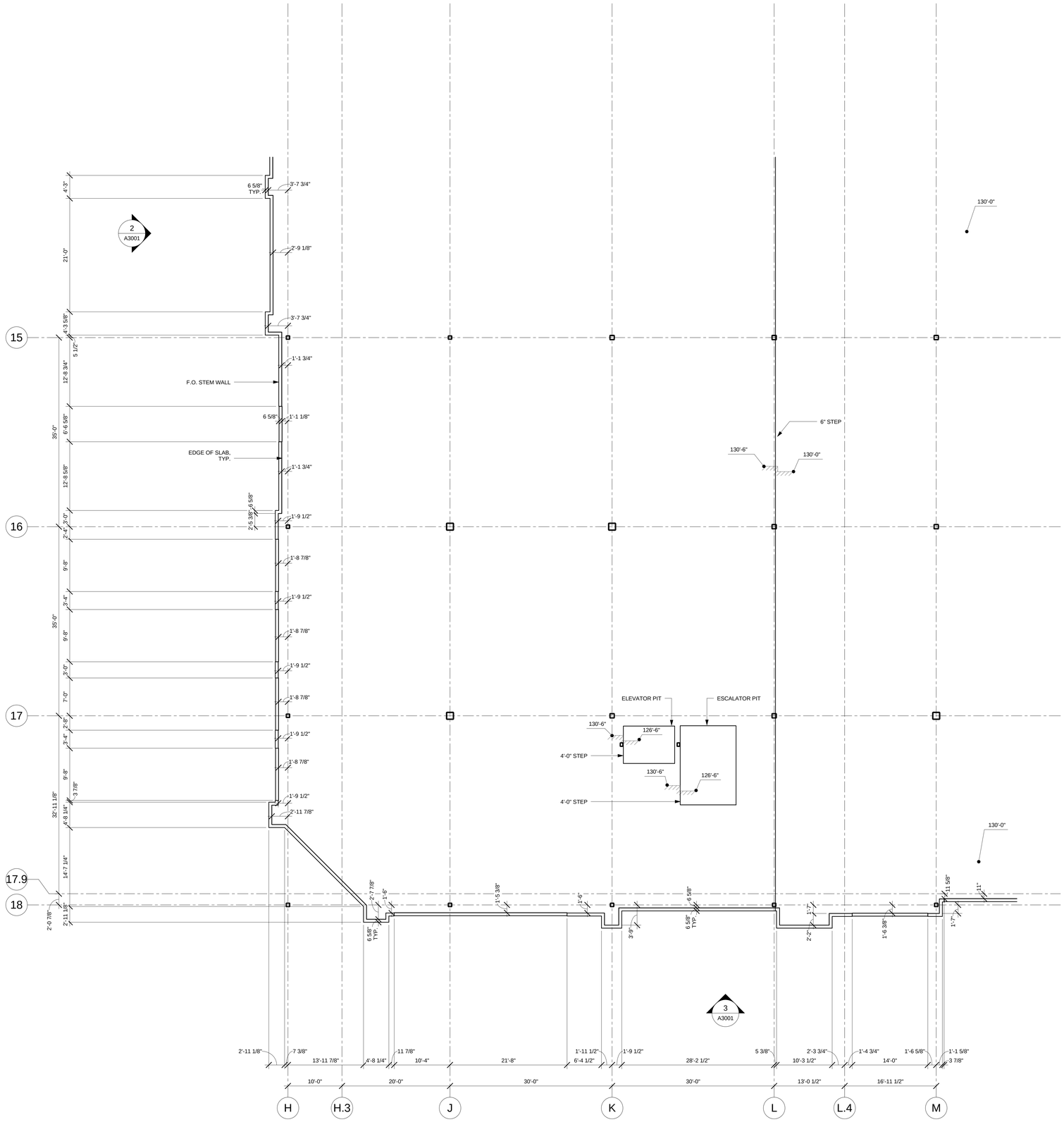

1 A2332 FIRST SLAB EDGE PLAN - NORTHWEST
Scale: 1/8" = 1'-0"

N PROJECT
N TRUE

SLAB EDGE PLAN LEGEND

SHAFT OPENING LOCATION

SLAB STEP

CLIENT

CENTERCAL PROPERTIES, LLC

COPYRIGHT:

Any reproduction or distribution for any purpose other than authorized by IBI Group is forbidden. Written dimensions shall have precedence over scaled dimensions. Contractors shall verify and be responsible for all dimensions and conditions on the job, and report any errors, omissions or conflicts in the dimensions and conditions shown on the drawing. Shop drawings shall be submitted to IBI Group for approval before proceeding with fabrication.

COPYRIGHT © 2016 IBI GROUP

ISSUES

NO.	ISSUANCE	STATUS	DATE
1	PROGRESS SET		5/26/2016

SEAL

10759 REGISTERED ARCHITECT
CRAIG ROTHENBURGER
STATE OF WASHINGTON

SUB CONSULTANT

PRIME CONSULTANT

IBI
ibigroup.com

PROJECT
The Village at Totem Lake - Building B
Kirkland, Washington

PROJECT NO:	Building B
DRAWN BY:	Author
CHKD' BY:	Checker
SCALE:	As indicated
DATE:	05/26/2016

SHEET TITLE
FIRST SLAB EDGE PLAN - NORTHWEST

BLDG	SHEET NUMBER	ISSUE
B	A2332	

C:\Users\bjan.shoesh\Documents\ATW_Totem_Bldg B_A_2016_bjan.shoesh.rvt

5/26/2016 6:58:09 PM

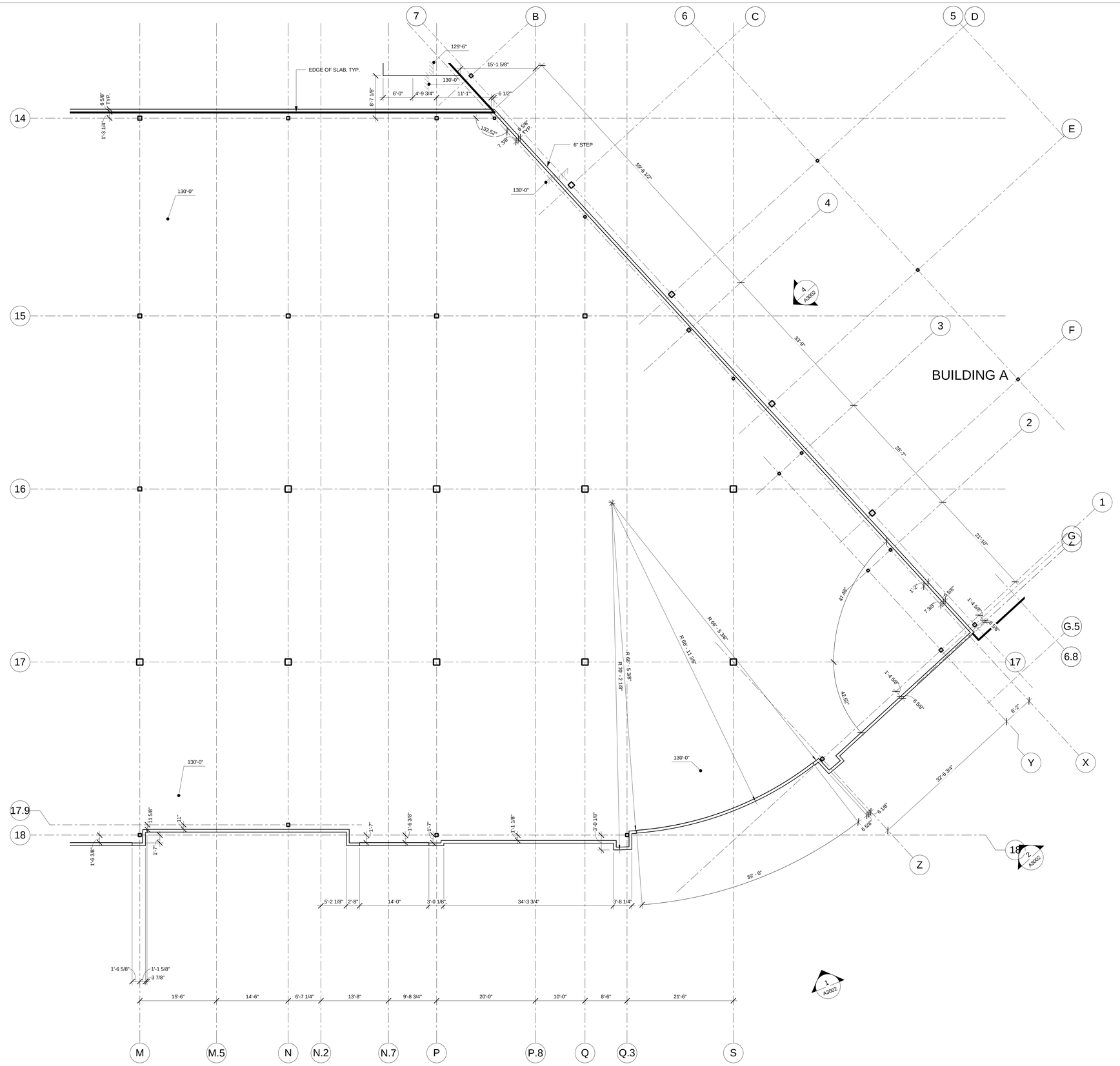

1 FIRST SLAB EDGE PLAN - SOUTHWEST
A2333 Scale: 1/8" = 1'-0"

SLAB EDGE PLAN LEGEND

SHAFT OPENING LOCATION

SLAB STEP

CLIENT

CENTERCAL PROPERTIES, LLC

COPYRIGHT:

Any reproduction or distribution for any purpose other than authorized by IBI Group is forbidden. Written dimensions shall have precedence over scaled dimensions. Contractors shall verify and be responsible for all dimensions and conditions on the job, and report any errors or omissions to the architect from the dimensions and conditions shown on the drawing. Shop drawings shall be submitted to IBI Group for approval before proceeding with fabrication.

COPYRIGHT © 2016 IBI GROUP

ISSUES

NO.	ISSUANCE	STATUS	DATE
1	PROGRESS SET		5/26/2016

SEAL

10759 REGISTERED ARCHITECT
CRAIG ROTHENBURGER
STATE OF WASHINGTON

SUB CONSULTANT

PRIME CONSULTANT

IBI
ibigroup.com

PROJECT
The Village at Totem Lake - Building B
Kirkland, Washington

PROJECT NO:	Building B
DRAWN BY:	Author
CHKD' BY:	Checker
SCALE:	As indicated
DATE:	05/26/2016

SHEET TITLE
FIRST SLAB EDGE PLAN - SOUTHWEST

BLDG	SHEET NUMBER	ISSUE
B	A2333	

C:\Users\bjian.shoeleh\Documents\ATW_Totem_Bldg B_A_2016_bjian.shoeleh.rvt

5/26/2016 6:58:11 PM

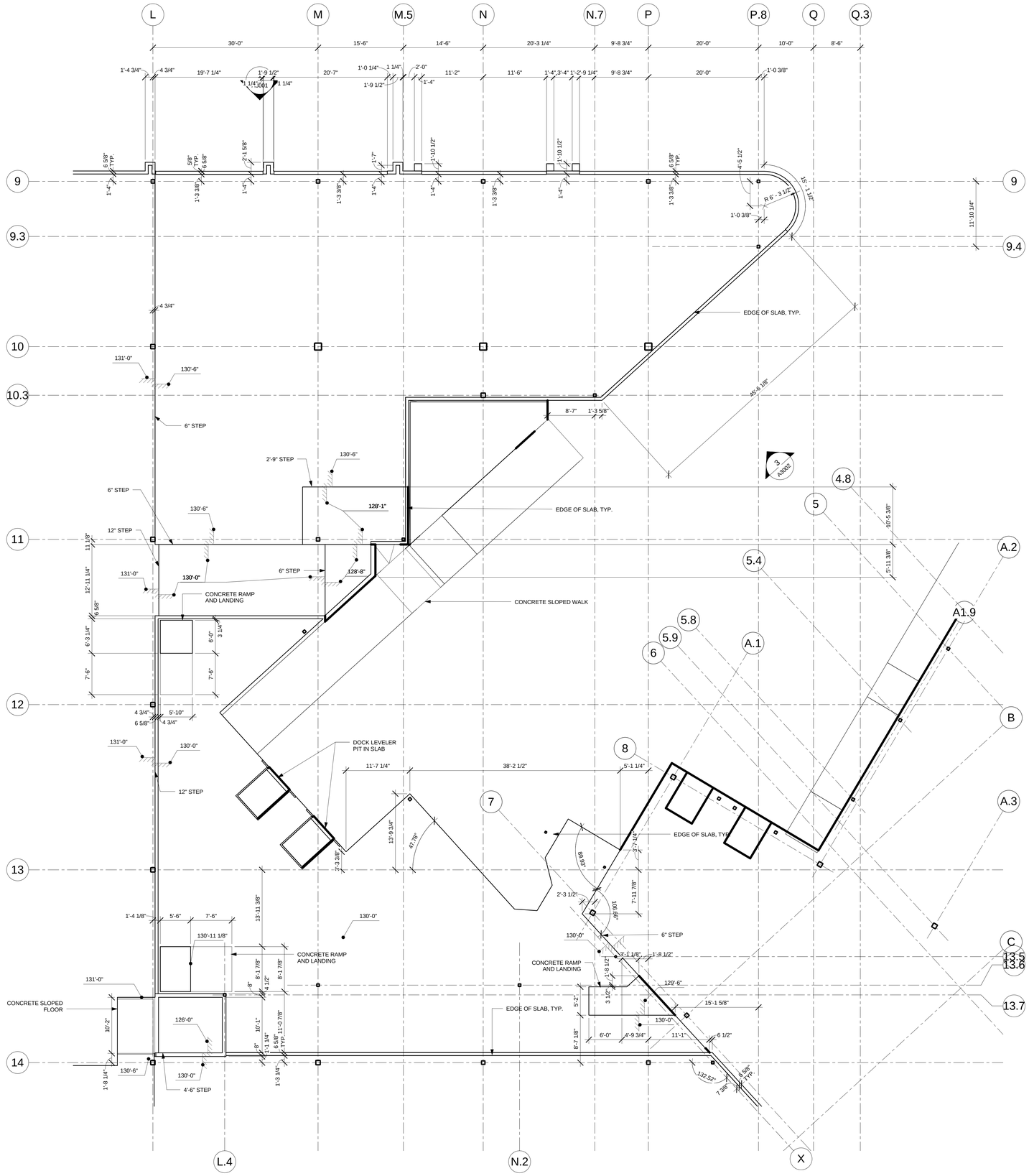

1 A2334 FIRST SLAB EDGE PLAN - SOUTHEAST
Scale: 1/8" = 1'-0"

N PROJECT

N TRUE

SLAB EDGE PLAN LEGEND

SHAFT OPENING LOCATION

SLAB STEP

CLIENT

CENTERCAL PROPERTIES, LLC

COPYRIGHT:

Any reproduction or distribution for any purpose other than authorized by IBI Group is forbidden. Written dimensions shall have precedence over scaled dimensions. Contractors shall verify and be responsible for all dimensions and conditions on the job, and report any errors or omissions to the consultant then the dimensions and conditions shown on the drawing. Shop drawings shall be submitted to IBI Group for approval before proceeding with fabrication.

COPYRIGHT © 2016 IBI GROUP

ISSUES

NO.	ISSUANCE	STATUS	DATE
1	PROGRESS SET		5/26/2016

SEAL

10759 REGISTERED ARCHITECT
CRAIG ROTHENBURGER
STATE OF WASHINGTON

SUB CONSULTANT

PRIME CONSULTANT

IBI ibigroup.com

PROJECT
The Village at Totem Lake - Building B
Kirkland, Washington

PROJECT NO:	Building B
DRAWN BY:	Author
CHKD' BY:	Checker
SCALE:	As indicated
DATE:	05/26/2016

SHEET TITLE
FIRST SLAB EDGE PLAN - SOUTHEAST

BLDG	SHEET NUMBER	ISSUE
B	A2334	

C:\Users\bjan.shoeb\Documents\ATW_Totem_Bldg\B_A_2016_bjan.shoeb.rvt

5/26/2016 6:58:12 PM

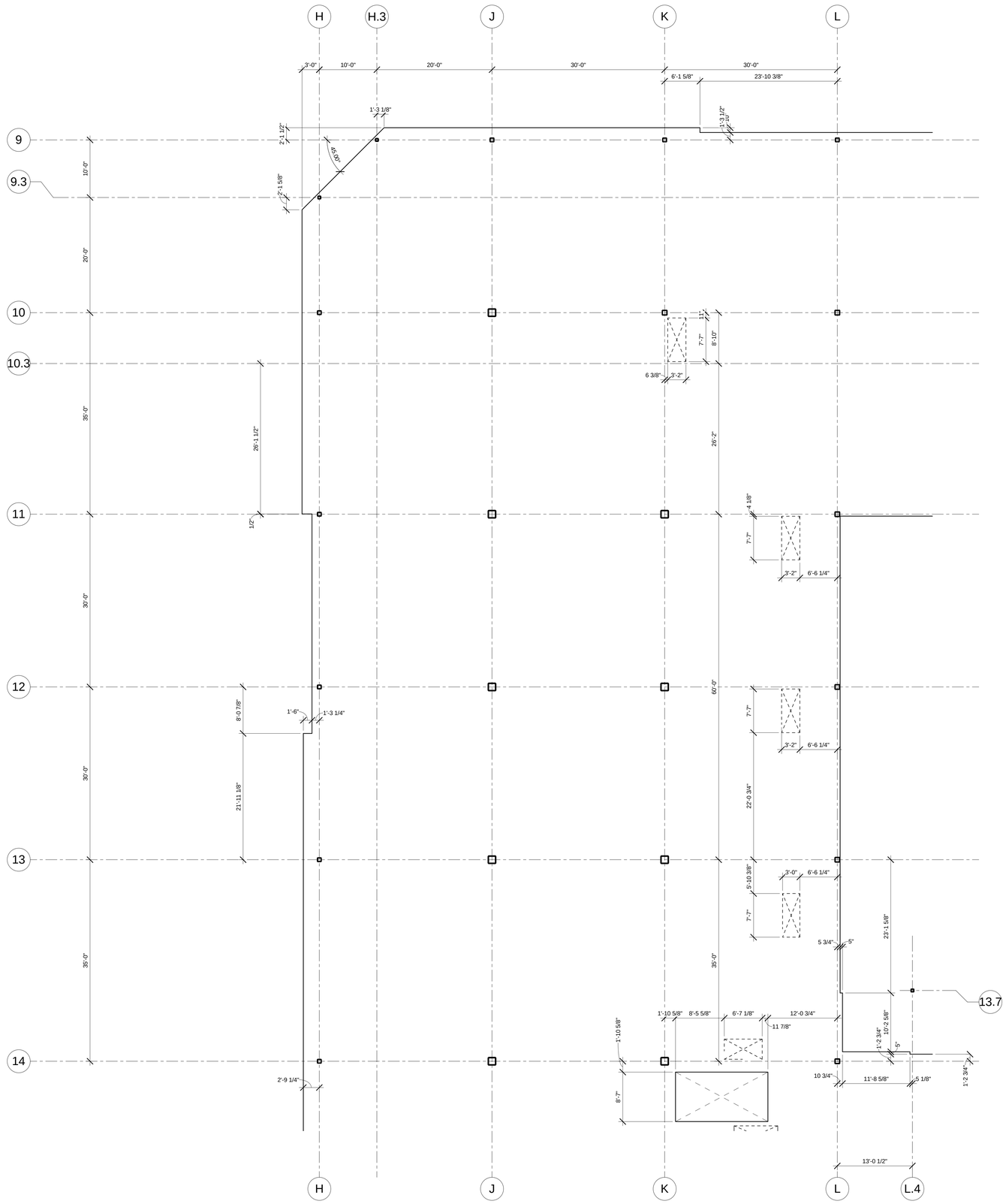

1 A2335 SECOND FLOOR SLAB PLAN_BASE PLAN - NORTHEAST

Scale: 1/8" = 1'-0"

5/26/2016 6:58:13 PM C:\Users\bjan.shrestha\Documents\ATW_Totem_BldgB_A_2016_bjan.shrestha.rvt

SLAB EDGE PLAN LEGEND

SHAFT OPENING LOCATION

SLAB STEP

CLIENT

CENTERCAL PROPERTIES, LLC

COPYRIGHT:

Any reproduction or distribution for any purpose other than authorized by IBI Group is forbidden. Written dimensions shall have precedence over scaled dimensions. Contractors shall verify and be responsible for all dimensions and conditions on the job, and report any errors or omissions to the architect from the dimensions and conditions shown on the drawing. Shop drawings shall be submitted to IBI Group for approval before proceeding with fabrication.

COPYRIGHT © 2016 IBI GROUP

ISSUES

NO.	ISSUANCE	STATUS	DATE

SEAL

10759 REGISTERED ARCHITECT

CRAIG ROTHENBURGER

STATE OF WASHINGTON

SUB CONSULTANT

PRIME CONSULTANT

IBI

ibigroup.com

PROJECT

The Village at Totem Lake - Building B

Kirkland, Washington

PROJECT NO:	Building B
DRAWN BY:	DC
CHKD' BY:	Checker
SCALE:	As indicated
DATE:	05/26/2016

SHEET TITLE

SECOND SLAB EDGE PLAN - NORTHEAST

BLDG	SHEET NUMBER	ISSUE
B	A2335	

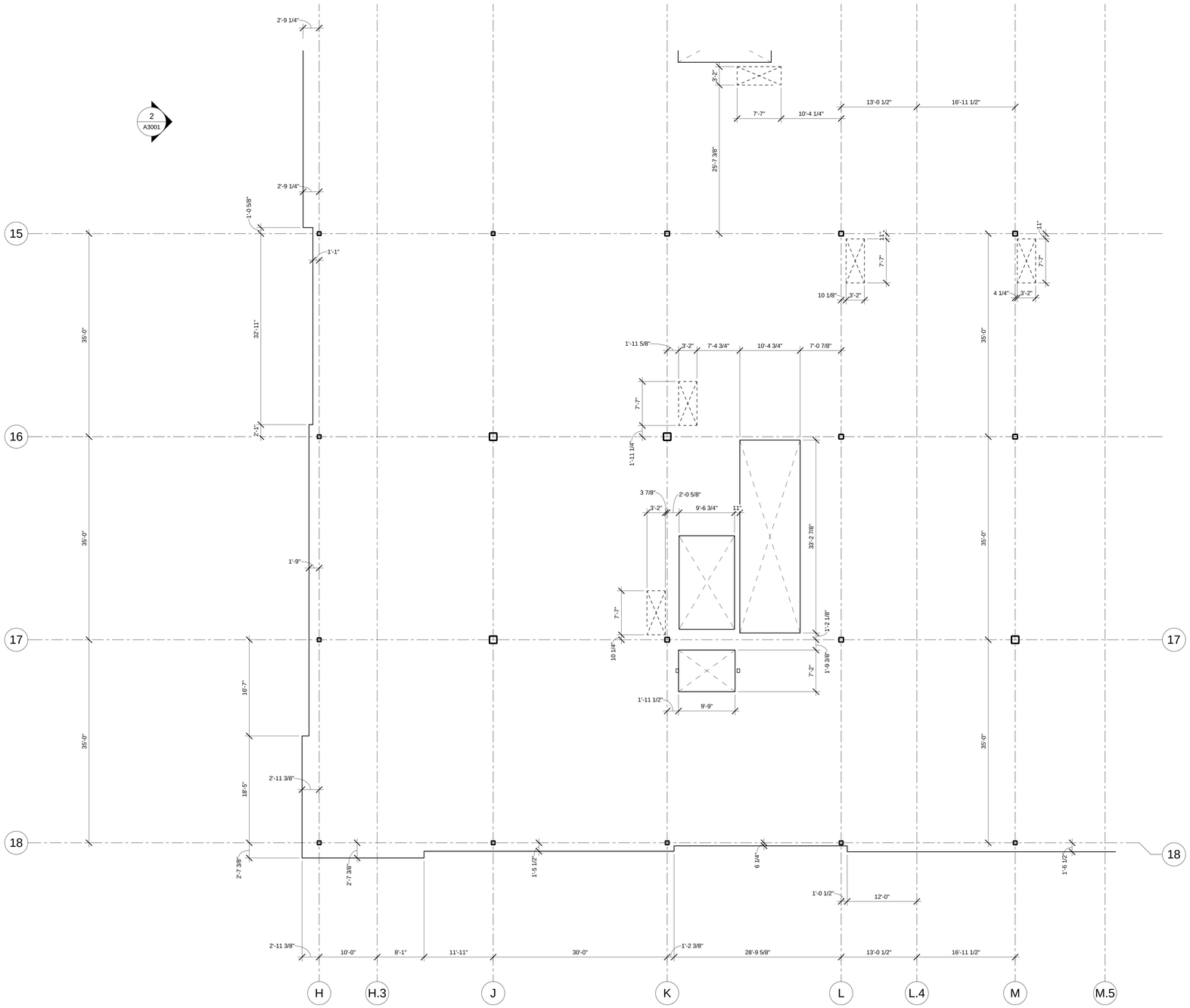

1 A2336 SECOND FLOOR SLAB PLAN_BASE PLAN - NORTHWEST

Scale: 1/8" = 1'-0"

SLAB EDGE PLAN LEGEND

SHAFT OPENING LOCATION

SLAB STEP

CLIENT

CENTERCAL PROPERTIES, LLC

COPYRIGHT:

Any reproduction or distribution for any purpose other than authorized by IBI Group is forbidden. Written dimensions shall have precedence over scaled dimensions. Contractors shall verify and be responsible for all dimensions and conditions on the job, and report any errors or omissions to the architect from the dimensions and conditions shown on the drawing. Shop drawings shall be submitted to IBI Group for approval before proceeding with fabrication.

COPYRIGHT © 2016 IBI GROUP

ISSUES

NO.	ISSUANCE	STATUS	DATE

SEAL

10759 REGISTERED ARCHITECT

CRAIG ROTHENBURGER
STATE OF WASHINGTON

SUB CONSULTANT

PRIME CONSULTANT

IBI
ibigroup.com

PROJECT

The Village at Totem Lake - Building B
Kirkland, Washington

PROJECT NO:	Building B
DRAWN BY:	DC
CHKD' BY:	Checker
SCALE:	As indicated
DATE:	05/26/2016

SHEET TITLE

SECOND SLAB EDGE PLAN - NORTHWEST

BLDG	SHEET NUMBER	ISSUE
B	A2336	

C:\Users\bjain.shreeth\Documents\ATW_Totem_Bldg\B_A_2016_bjain.shreeth.rvt

5/26/2016 6:58:14 PM

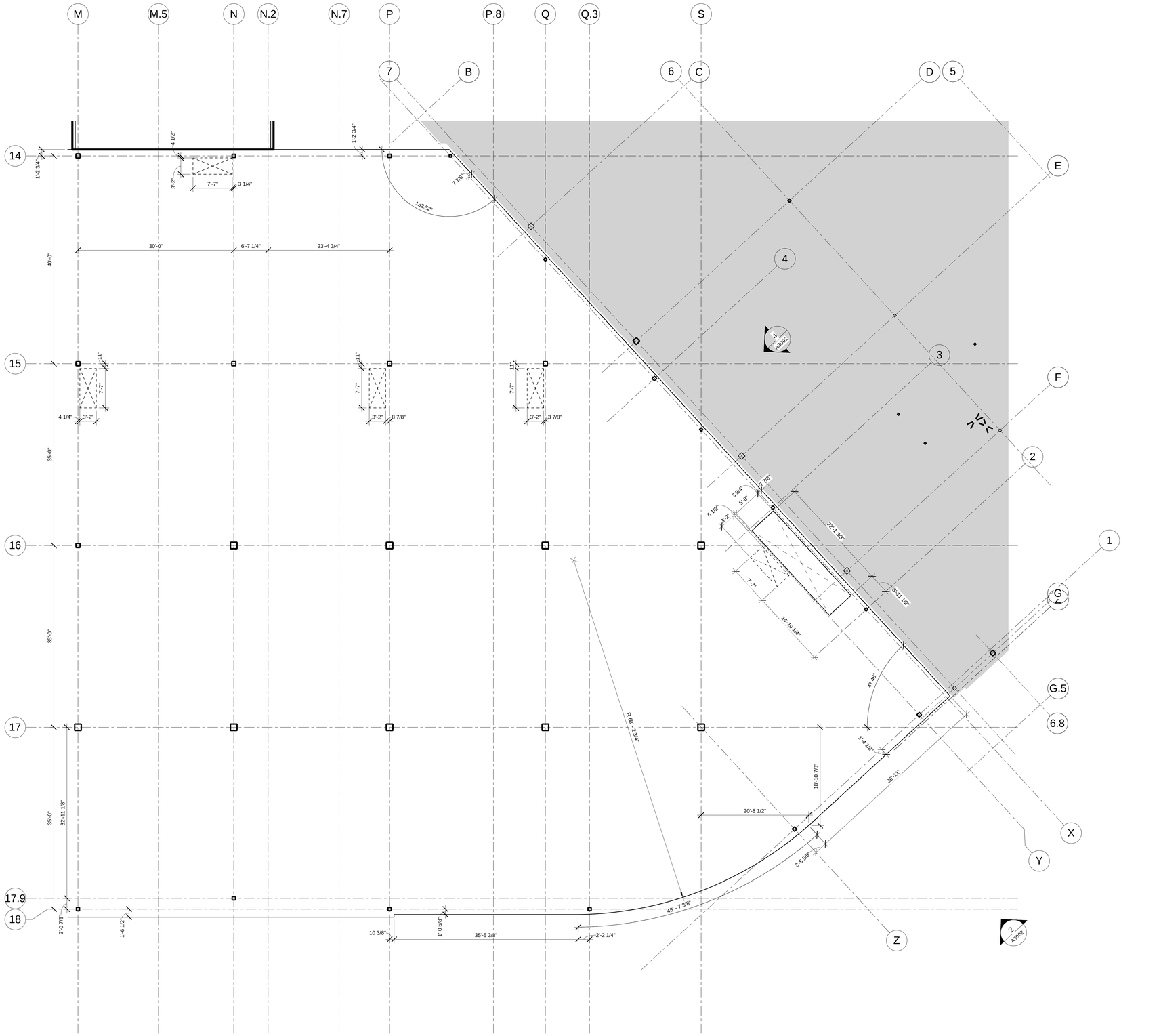

1 A2337 SECOND FLOOR SLAB PLAN_BASE PLAN - SOUTHWEST
Scale: 1/8" = 1'-0"

N PROJECT

N TRUE

SLAB EDGE PLAN LEGEND

SHAFT OPENING LOCATION

SLAB STEP

CLIENT

CENTERCAL PROPERTIES, LLC

COPYRIGHT:

Any reproduction or distribution for any purpose other than authorized by IBI Group is forbidden. Written dimensions shall have precedence over scaled dimensions. Contractors shall verify and be responsible for all dimensions and conditions on the job, and report any errors or omissions to the architect from the dimensions and conditions shown on the drawing. Shop drawings shall be submitted to IBI Group for approval before proceeding with fabrication.

COPYRIGHT © 2016 IBI GROUP

ISSUES

NO.	ISSUANCE	STATUS	DATE

SEAL

10759 REGISTERED ARCHITECT
CRAIG ROTHENBURGER
STATE OF WASHINGTON

SUB CONSULTANT

PRIME CONSULTANT

IBI
ibigroup.com

PROJECT

The Village at Totem Lake - Building B
Kirkland, Washington

PROJECT NO:	Building B
DRAWN BY:	DC
CHKD' BY:	Checker
SCALE:	As indicated
DATE:	05/26/2016

SHEET TITLE

SECOND SLAB EDGE PLAN - SOUTHWEST

BLDG	SHEET NUMBER	ISSUE
B	A2337	

C:\Users\bjaya.shoyele\Documents\ATW_Totem_Bldg B_A_2016_bjaya.shoyele.rvt

5/26/2016 5:59:17 PM

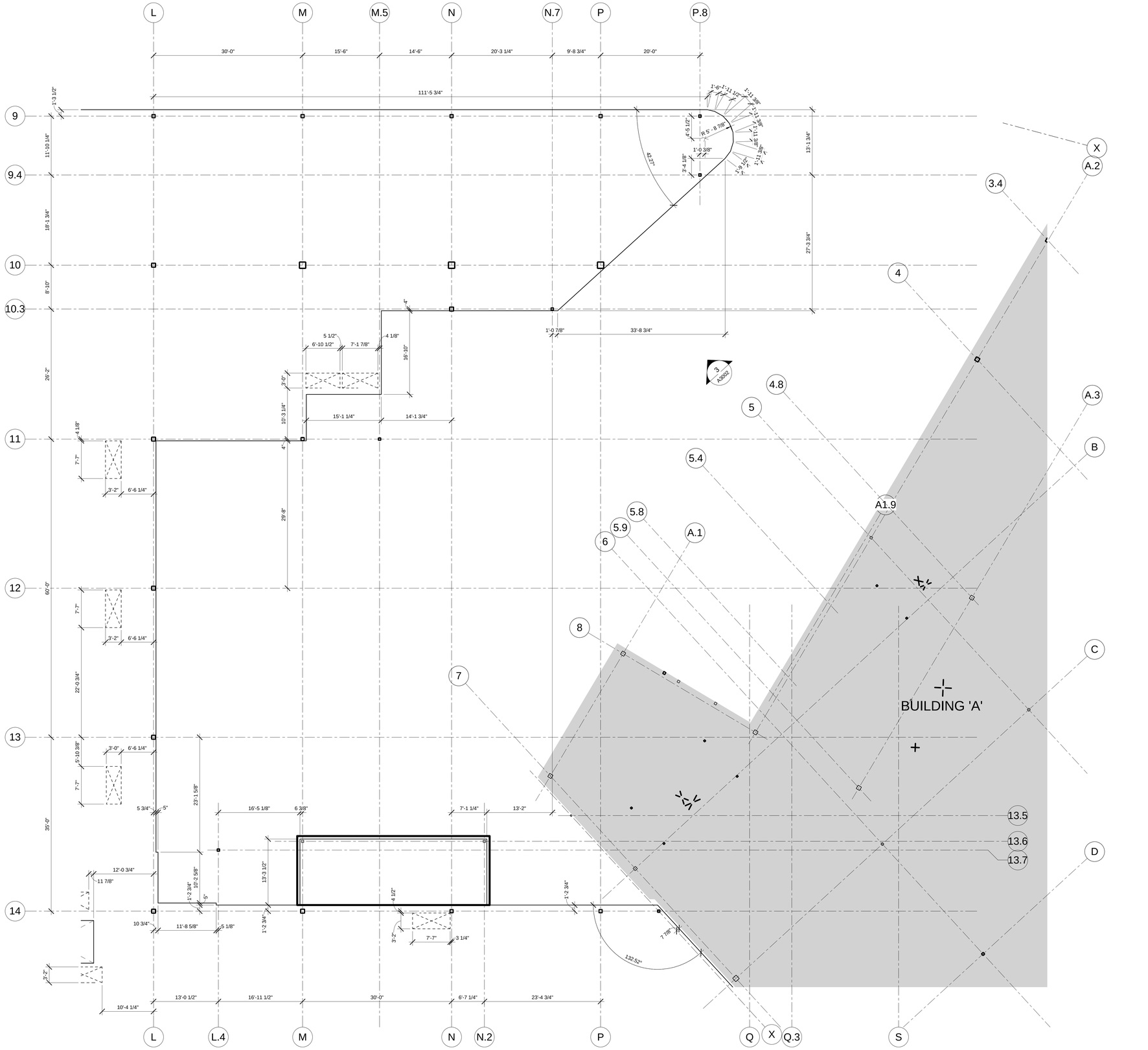

1 SECOND FLOOR SLAB PLAN_BASE PLAN - SOUTHEAST
A2338 Scale: 1/8" = 1'-0"

SLAB EDGE PLAN LEGEND

SHAFT OPENING LOCATION

SLAB STEP

CLIENT

CENTERCAL PROPERTIES, LLC

COPYRIGHT:

Any reproduction or distribution for any purpose other than authorized by IBI Group is forbidden. Written dimensions shall have precedence over scaled dimensions. Contractors shall verify and be responsible for all dimensions and conditions on the job, and report any errors, omissions or conflicts from the dimensions and conditions shown on the drawing. Shop drawings shall be submitted to IBI Group for approval before proceeding with fabrication.

COPYRIGHT © 2016 IBI GROUP

ISSUES

NO.	ISSUANCE	STATUS	DATE

SEAL

10759 REGISTERED ARCHITECT
CRAIG ROTHENBURGER
STATE OF WASHINGTON

SUB CONSULTANT

PRIME CONSULTANT

IBI
ibigroup.com

PROJECT
The Village at Totem Lake - Building B
Kirkland, Washington

PROJECT NO:	Building B
DRAWN BY:	DC
CHKD' BY:	Checker
SCALE:	As indicated
DATE:	05/26/2016

SHEET TITLE
SECOND SLAB EDGE PLAN - SOUTHEAST

BLDG	SHEET NUMBER	ISSUE
B	A2338	

C:\Users\bjan.shoaib\Documents\ATW_Totem_BldgB_A_2016_bjan.shoaib.rvt

5/26/2016 5:28:19 PM

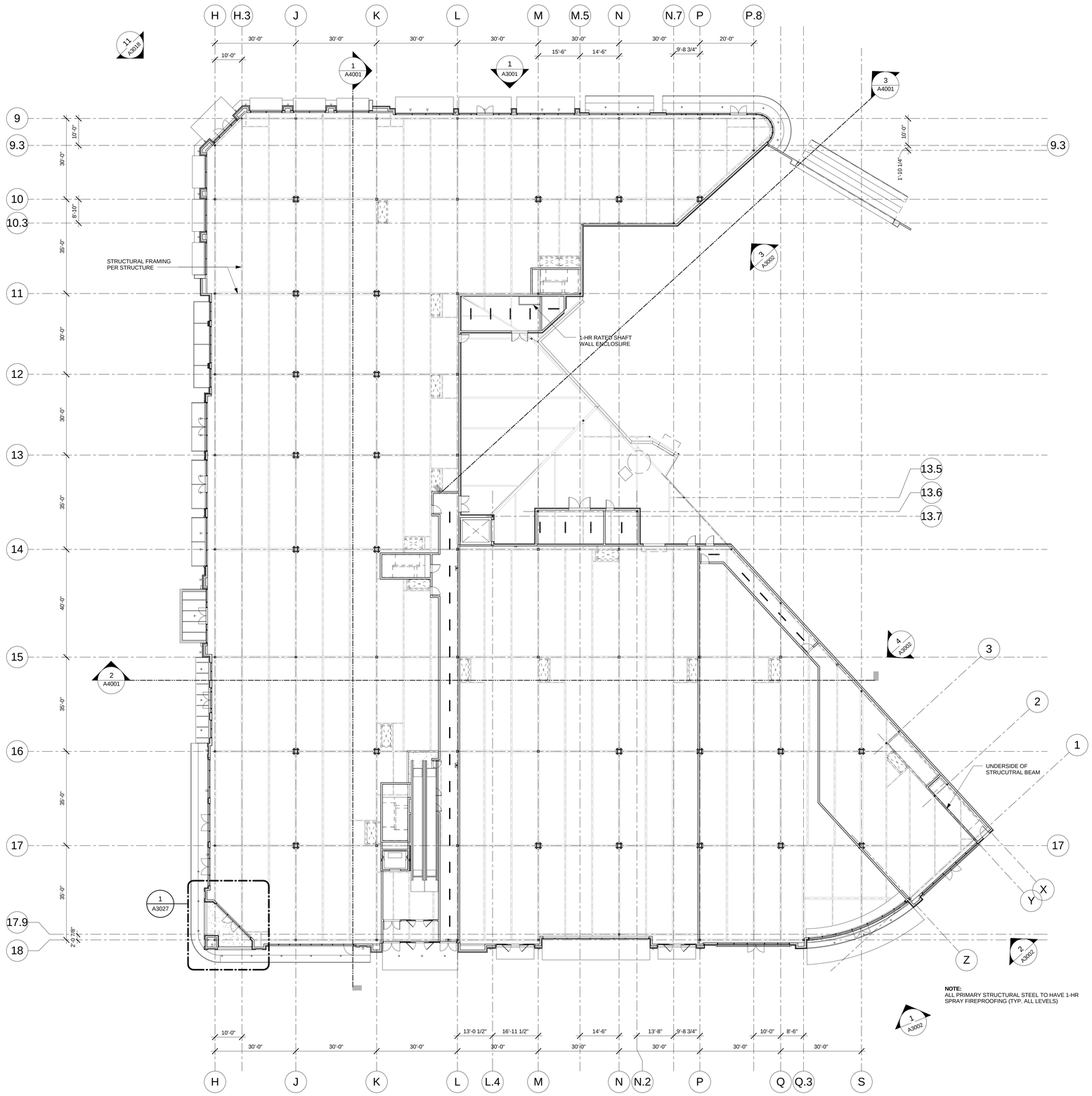

1 FIRST FLOOR RCP
A2701 Scale: 1/16" = 1'-0"

N PROJECT
N TRUE

CLIENT

CENTERCAL PROPERTIES, LLC

COPYRIGHT:

Any reproduction or distribution for any purpose other than authorized by IBI Group is forbidden. Written dimensions shall have precedence over scaled dimensions. Contractors shall verify and be responsible for all dimensions and conditions on the job, and report any errors or omissions to the architect then the dimensions and conditions shown on the drawing. Shop drawings shall be submitted to IBI Group for approval before proceeding with fabrication.

COPYRIGHT © 2016 IBI GROUP

ISSUES

NO.	ISSUANCE	STATUS	DATE
1	PROGRESS SET		5/26/2016

SEAL

10759 REGISTERED ARCHITECT
CRAIG ROTHENBURGER
STATE OF WASHINGTON

SUB CONSULTANT

PRIME CONSULTANT

IBI ibigroup.com

PROJECT
The Village at Totem Lake - Building B
Kirkland, Washington

PROJECT NO:	Building B
DRAWN BY:	Author
CHKD' BY:	Checker
SCALE:	1/16" = 1'-0"
DATE:	05/26/2016

SHEET TITLE
FIRST FLOOR REFLECTED CEILING PLAN

BLDG	SHEET NUMBER	ISSUE
B	A2701	

C:\Users\bjan.shoesh\Documents\ATW_Totem_Bldg B_A_2016_bjan.shoesh.rvt

5/26/2016 6:03:28 PM

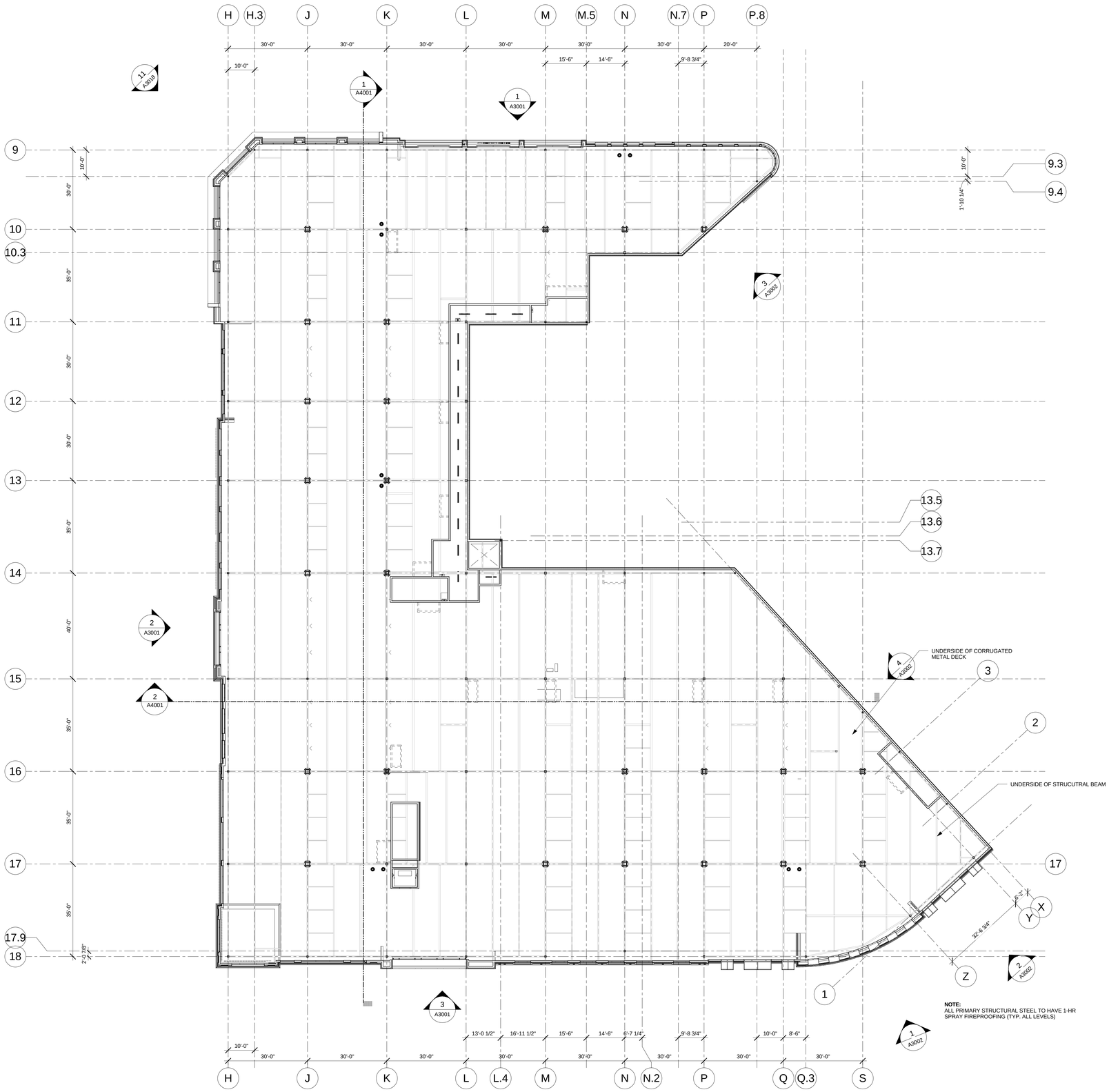

NOTE:
ALL PRIMARY STRUCTURAL STEEL TO HAVE 1-HR SPRAY FIREPROOFING (TYP. ALL LEVELS)

N PROJECT

N TRUE

1 / A2702 SECOND FLOOR RCP
Scale: 1/16" = 1'-0"

C:\Users\bjan.shoesh\Documents\ATW_Totem_Bldg B_A_2016_bjan.shoesh.rvt

5/26/2016 6:08:34 PM

CLIENT

CENTERCAL PROPERTIES, LLC

COPYRIGHT:

Any reproduction or distribution for any purpose other than authorized by IBI Group is forbidden. Written dimensions shall have precedence over scaled dimensions. Contractors shall verify and be responsible for all dimensions and conditions on the job, and report any errors, omissions or conflicts in the dimensions and conditions shown on the drawing. Shop drawings shall be submitted to IBI Group for approval before proceeding with fabrication.

COPYRIGHT © 2016 IBI GROUP

ISSUES

NO.	ISSUANCE	STATUS	DATE

SEAL

10759 REGISTERED ARCHITECT
CRAIG ROTHENBURGER
STATE OF WASHINGTON

SUB CONSULTANT

PRIME CONSULTANT

IBI ibigroup.com

PROJECT
The Village at Totem Lake - Building B
Kirkland, Washington

PROJECT NO:	Building B
DRAWN BY:	Author
CHKD' BY:	Checker
SCALE:	1/16" = 1'-0"
DATE:	05/26/2016

SHEET TITLE
SECOND FLOOR REFLECTED CEILING PLAN

BLDG	SHEET NUMBER	ISSUE
B	A2702	

1 A2801 ROOF PLAN
Scale: 1/16" = 1'-0"

5/26/2016 6:08:39 PM
C:\Users\ibjan.shoeleh\Documents\ATW_Totem_Bldg B_A_2016_bjan.shoeleh.rvt

CLIENT

CENTERCAL PROPERTIES, LLC

COPYRIGHT:

Any reproduction or distribution for any purpose other than authorized by IBI Group is forbidden. Written dimensions shall have precedence over scaled dimensions. Contractors shall verify and be responsible for all dimensions and conditions on the job, and report any errors, omissions or conflicts in them the dimensions and conditions shown on the drawing. Shop drawings shall be submitted to IBI Group for approval before proceeding with fabrication.

COPYRIGHT © 2016 IBI GROUP

ISSUES

NO.	ISSUANCE	STATUS	DATE
1	PROGRESS SET		5/26/2016

SEAL

10759 REGISTERED ARCHITECT
CRAIG ROTHENBURGER
STATE OF WASHINGTON

SUB CONSULTANT

PRIME CONSULTANT

IBI
ibigroup.com

PROJECT
The Village at Totem Lake - Building B
Kirkland, Washington

PROJECT NO:	Building B
DRAWN BY:	Author
CHKD' BY:	Checker
SCALE:	1/16" = 1'-0"
DATE:	05/26/2016

SHEET TITLE
OVERALL ROOF PLAN

BLDG	SHEET NUMBER	ISSUE
B	A2801	

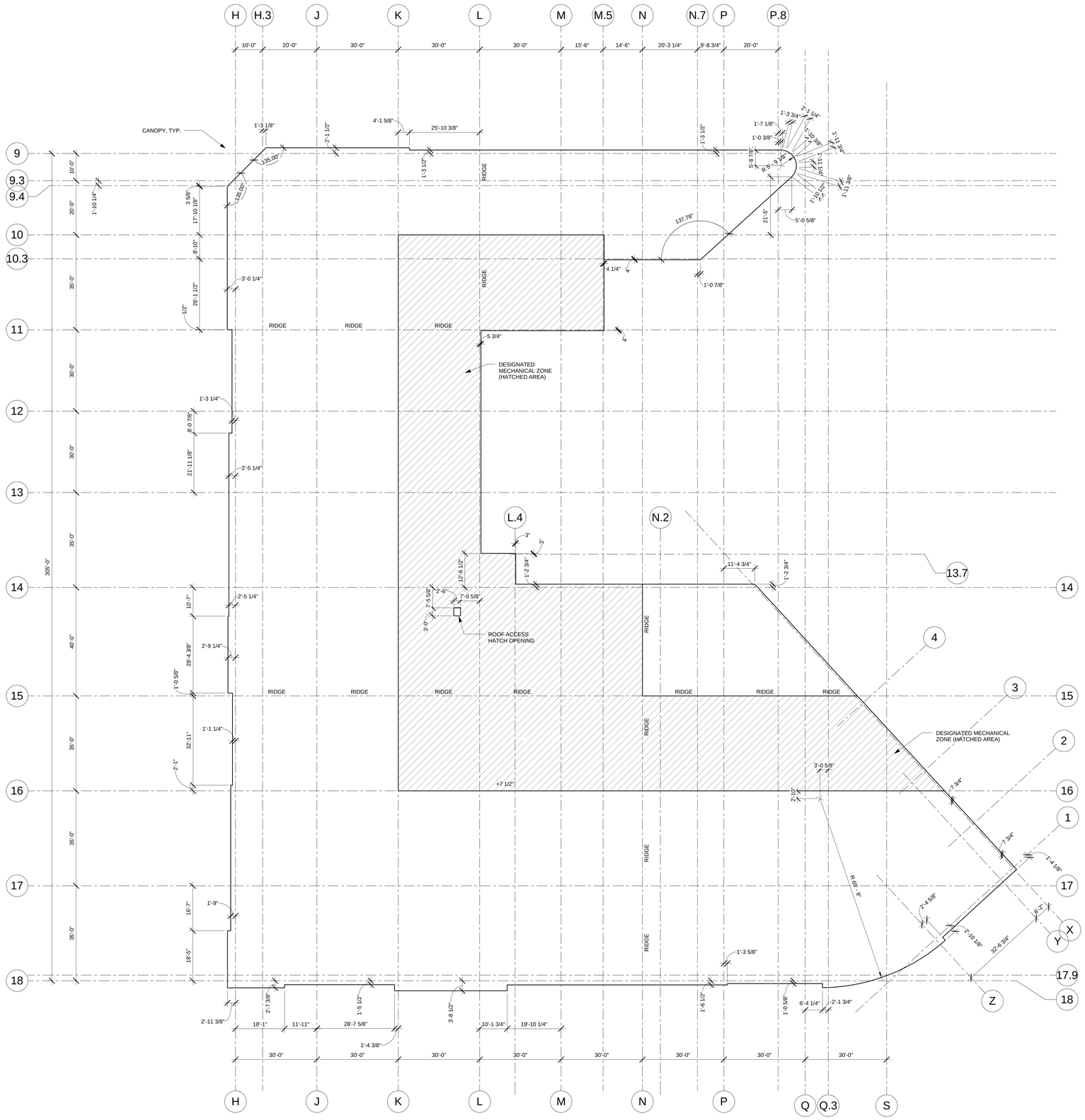

1 A2802 ROOF EDGE PLAN
Scale: 1/16" = 1'-0"

N PROJECT
N TRUE

C:\Users\craigs.shoreline\Documents\ATW_Totem_Bldg B_A_2016_craigs.shoreline.rvt

5/26/2016 6:58:41 PM

CLIENT

CENTERCAL PROPERTIES, LLC

COPYRIGHT:

Any reproduction or distribution for any purpose other than authorized by IBI Group is forbidden. Written dimensions shall have precedence over scaled dimensions. Contractors shall verify and be responsible for all dimensions and conditions on the job, and report any errors or omissions to the architect from the dimensions and conditions shown on the drawing. Shop drawings shall be submitted to IBI Group for approval before proceeding with fabrication.

COPYRIGHT © 2016 IBI GROUP

ISSUES

NO.	ISSUANCE	STATUS	DATE

SEAL

10759 REGISTERED ARCHITECT
CRAIG ROTHENBURGER
STATE OF WASHINGTON

SUB CONSULTANT

PRIME CONSULTANT

IBI
ibigroup.com

PROJECT

The Village at Totem Lake - Building B
Kirkland, Washington

PROJECT NO:	Building B
DRAWN BY:	Author
CHKD' BY:	Checker
SCALE:	1/16" = 1'-0"
DATE:	05/26/2016

SHEET TITLE

ROOF EDGE PLAN

BLDG	SHEET NUMBER	ISSUE
B	A2802	

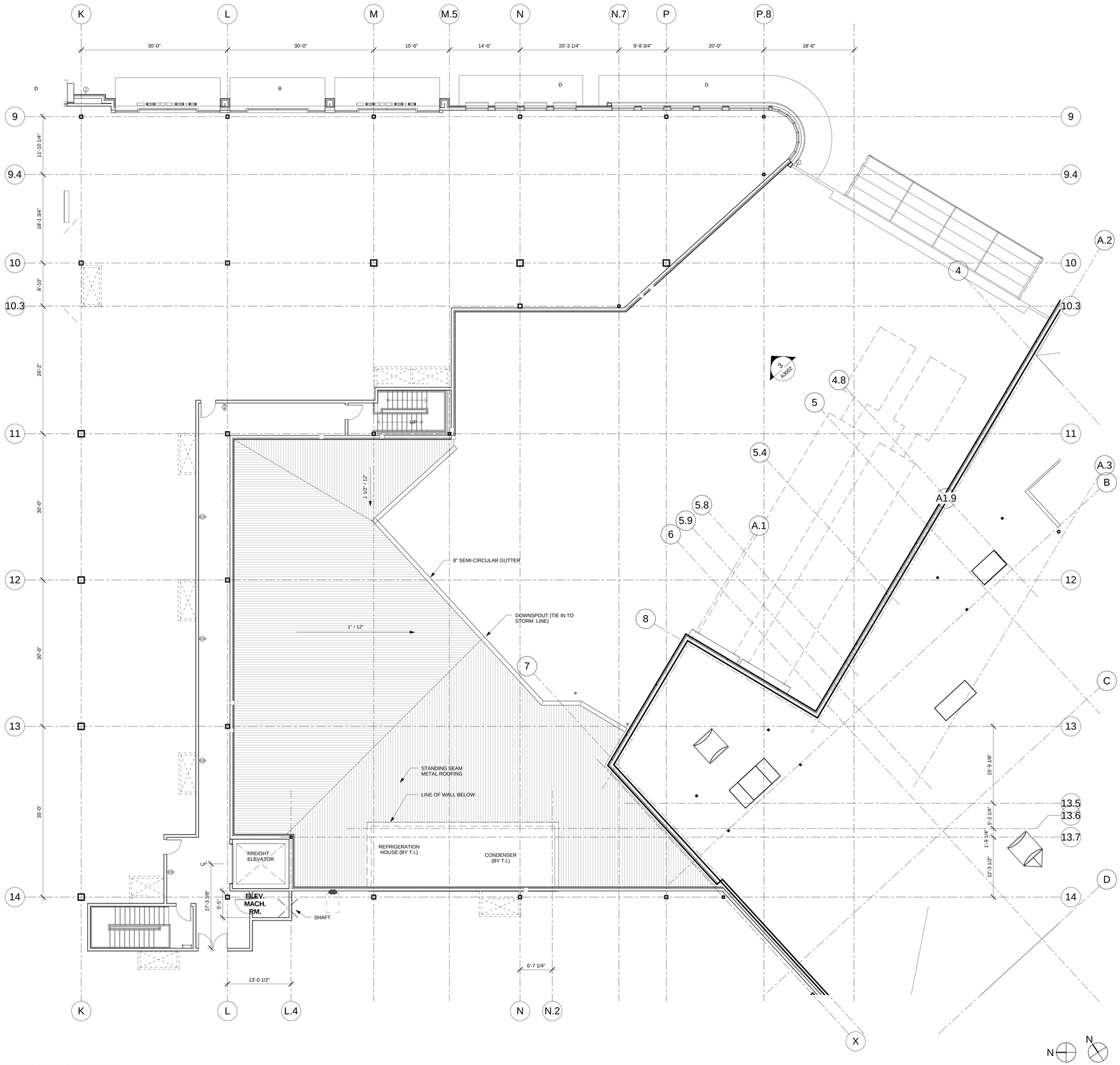

1 A2803 LOADING DOCK CANOPY PLAN

Scale: 1/8" = 1'-0"

CANOPY LEGEND

A. BUILT UP CANOPY- TPO ROOF METAL CLAD INTERNALLY DRAINED- EXTERIOR DOWNSPOUT

B. METAL AND GLASS EXTERNALLY SHEET DRAINED

C. METAL AND GLASS INTERNALLY DRAINED INTERIOR DOWNSPOUT

D. BUILT UP CANOPY- TPO ROOF METAL CLAD INTERNALLY DRAINED INTERIOR DOWNSPOUT

CLIENT

CENTERCAL PROPERTIES, LLC

COPYRIGHT:

Any reproduction or distribution for any purpose other than authorized by IBI Group is forbidden. Written dimensions shall have precedence over scaled dimensions. Contractors shall verify and be responsible for all dimensions and conditions on the job, and report any errors or omissions to the architect then the dimensions and conditions shown on the drawing. Shop drawings shall be submitted to IBI Group for approval before proceeding with fabrication.

COPYRIGHT © 2016 IBI GROUP

ISSUES

NO.	ISSUANCE	STATUS	DATE
1	PROGRESS SET		5/26/2016

SEAL

10759 REGISTERED ARCHITECT

CRAIG ROTHENBURGER
STATE OF WASHINGTON

SUB CONSULTANT

PRIME CONSULTANT

IBI
ibigroup.com

PROJECT

The Village at Totem Lake - Building B

Kirkland, Washington

PROJECT NO:	Building B
DRAWN BY:	Author
CHKD' BY:	Checker
SCALE:	1/8" = 1'-0"
DATE:	05/26/2016

SHEET TITLE

LOADING DOCK CANOPY PLAN

BLDG	SHEET NUMBER	ISSUE
B	A2803	

C:\Users\bbjan.shrestha\Documents\ATW_Totem_BldgB_A_2016_bbjan.shrestha.rvt

5/26/2016 6:58:46 PM

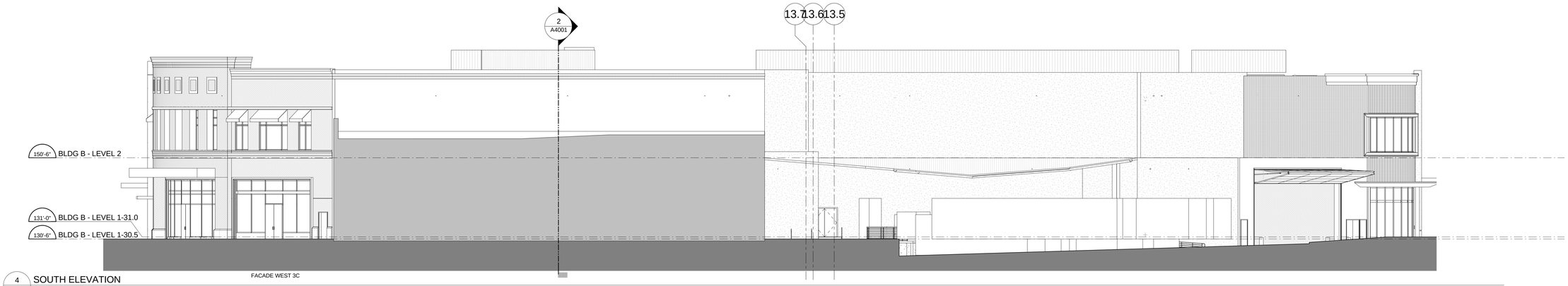

4 A3001 SOUTH ELEVATION
Scale: 3/32" = 1'-0"

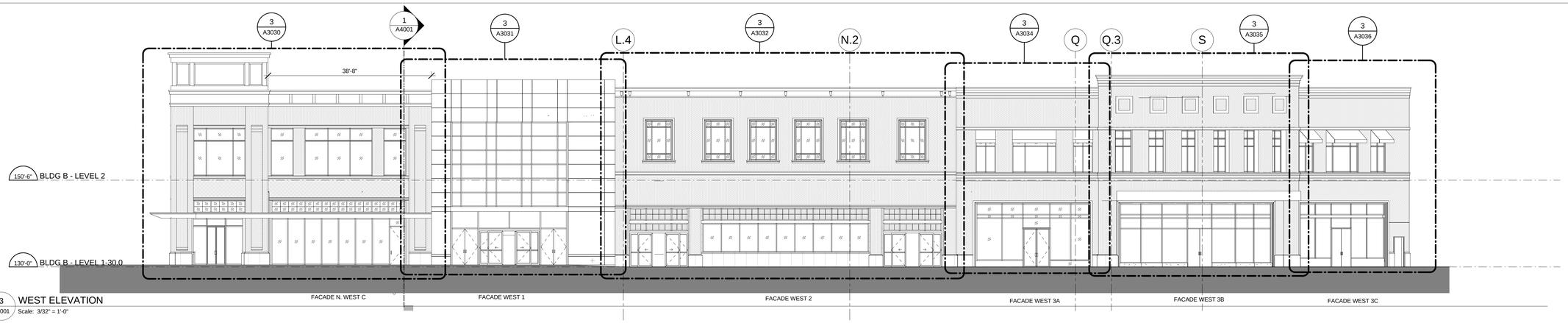

3 A3001 WEST ELEVATION
Scale: 3/32" = 1'-0"

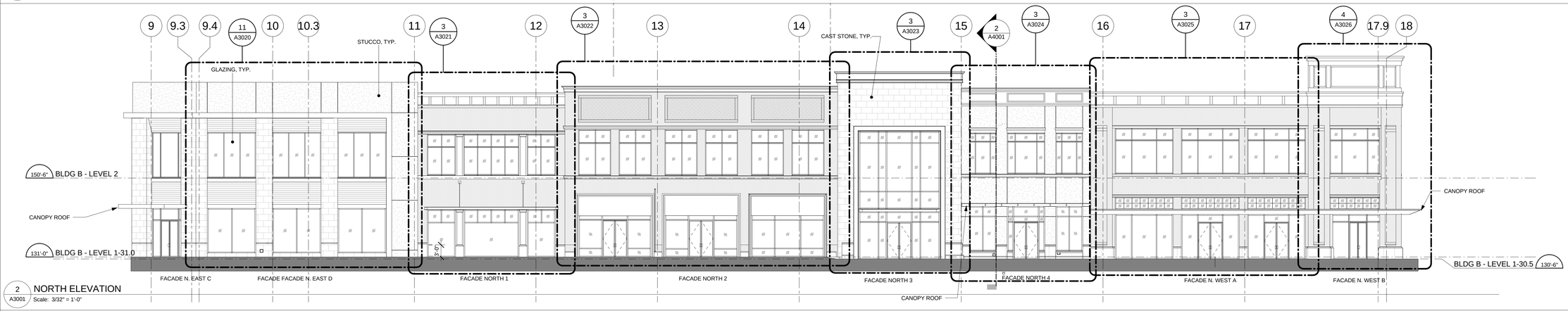

2 A3001 NORTH ELEVATION
Scale: 3/32" = 1'-0"

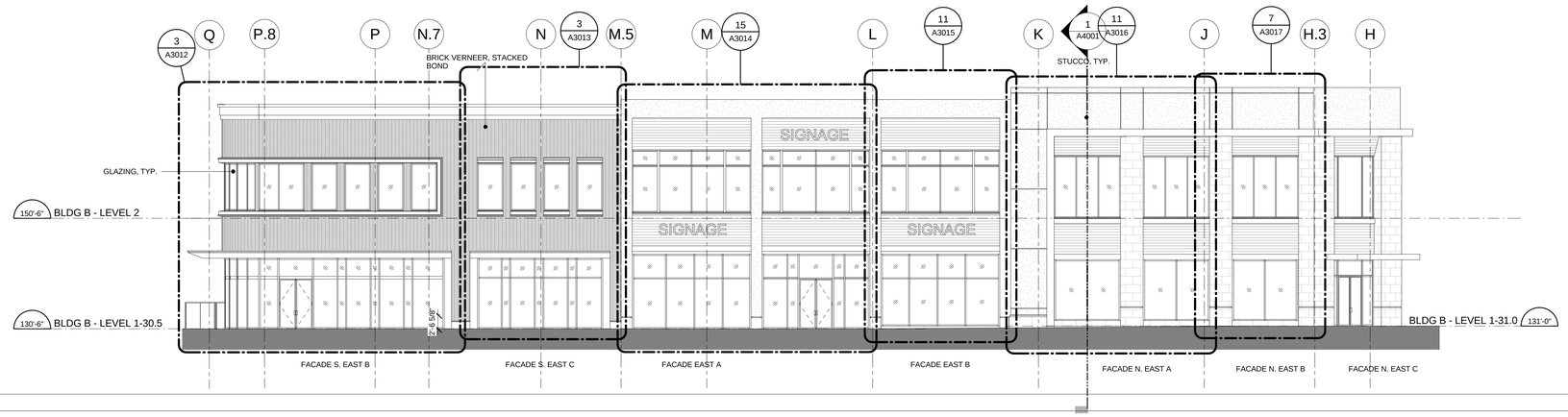

1 A3001 EAST ELEVATION
Scale: 3/32" = 1'-0"

CLIENT

CENTERCAL PROPERTIES, LLC

COPYRIGHT:

Any reproduction or distribution for any purpose other than authorized by IBI Group is forbidden. Written dimensions shall have precedence over scaled dimensions. Contractors shall verify and be responsible for all dimensions and conditions on the job, and report any errors and omissions to the architect then the dimensions and conditions shown on the drawing. Shop drawings shall be submitted to IBI Group for approval before proceeding with fabrication.

COPYRIGHT © 2016 IBI GROUP

ISSUES

NO.	ISSUANCE	STATUS	DATE
1	PROGRESS SET		5/26/2016

SEAL

10759 REGISTERED ARCHITECT
CRAIG ROTHENBURGER
STATE OF WASHINGTON

SUB CONSULTANT

PRIME CONSULTANT

IBI
ibigroup.com

PROJECT
The Village at Totem Lake - Building B
Kirkland, Washington

PROJECT NO:	Building B
DRAWN BY:	Author
CHKD' BY:	Checker
SCALE:	3/32" = 1'-0"
DATE:	05/26/2016

SHEET TITLE
EXTERIOR ELEVATIONS

BLDG	SHEET NUMBER	ISSUE
B	A3001	

C:\Users\bjan.shoieh\Documents\ATW_Totem_BldgB_A_2015_bjan.shoieh.rvt

5/26/2016 6:59:10 PM

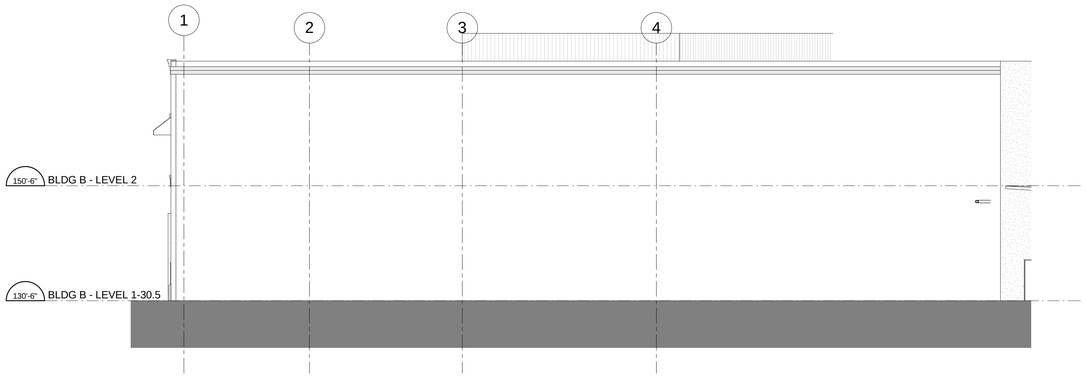

4 / A3002 PARTIAL SOUTHEAST ELEVATION
Scale: 3/32" = 1'-0"

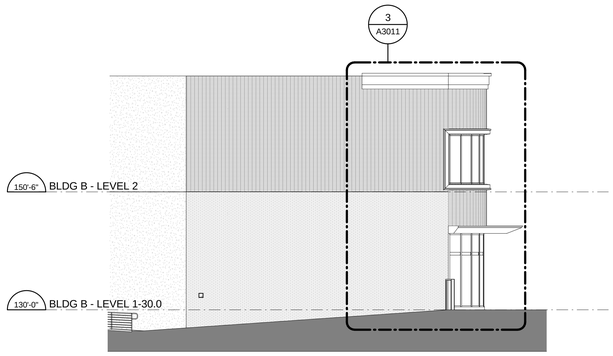

FACADE S. EAST A

3 / A3002 PARTIAL SOUTHWEST ELEVATION - B-100
Scale: 3/32" = 1'-0"

2 / A3002 PARTIAL SOUTHWEST ELEVATION - B180
Scale: 3/32" = 1'-0"

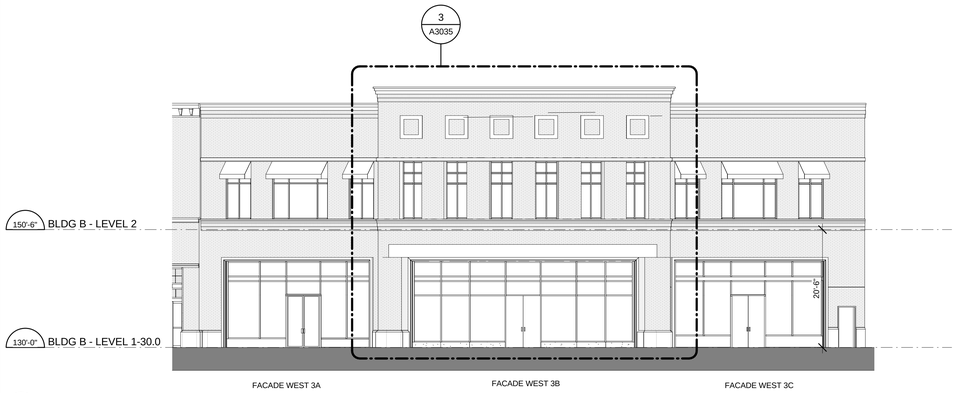

1 / A3002 PARTIAL SOUTHWEST ELEVATION - B175
Scale: 3/32" = 1'-0"

CLIENT

CENTERCAL PROPERTIES, LLC

COPYRIGHT:

Any reproduction or distribution for any purpose other than authorized by IBI Group is forbidden. Written dimensions shall have precedence over scaled dimensions. Contractors shall verify and be responsible for all dimensions and conditions on the job, and report any errors or omissions to the architect from the dimensions and conditions shown on the drawing. Shop drawings shall be submitted to IBI Group for approval before proceeding with fabrication.

COPYRIGHT © 2016 IBI GROUP

ISSUES

NO.	ISSUANCE	STATUS	DATE
1	PROGRESS SET		5/26/2016

SEAL

10759 REGISTERED ARCHITECT
CRAIG ROTHENBURGER
STATE OF WASHINGTON

SUB CONSULTANT

PRIME CONSULTANT

IBI
ibigroup.com

PROJECT
The Village at Totem Lake - Building B
Kirkland, Washington

PROJECT NO:	Building B
DRAWN BY:	Author
CHKD' BY:	Checker
SCALE:	3/32" = 1'-0"
DATE:	05/26/2016

SHEET TITLE
EXTERIOR ELEVATIONS

BLDG	SHEET NUMBER	ISSUE
B	A3002	

C:\Users\bjan.shoieh\Documents\ATW_Totem_B\bjgB_A_2016_bjan.shoieh.rvt

5/26/2016 6:59:21 PM

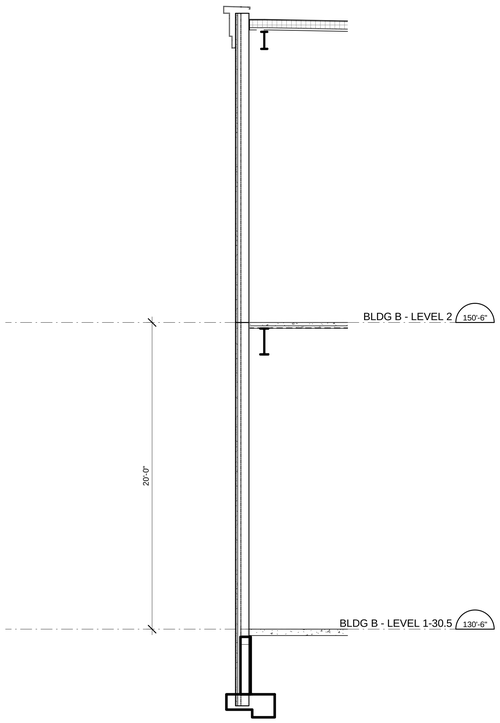

5 A3011 WALL SECTION A - S. EAST FACADE A
Scale: 1/4" = 1'-0"

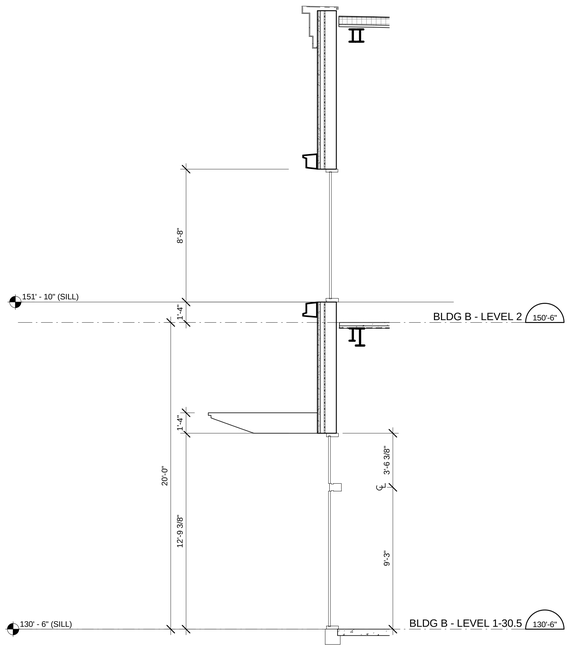

4 A3011 WALL SECTION B - S. EAST FACADE A
Scale: 1/4" = 1'-0"

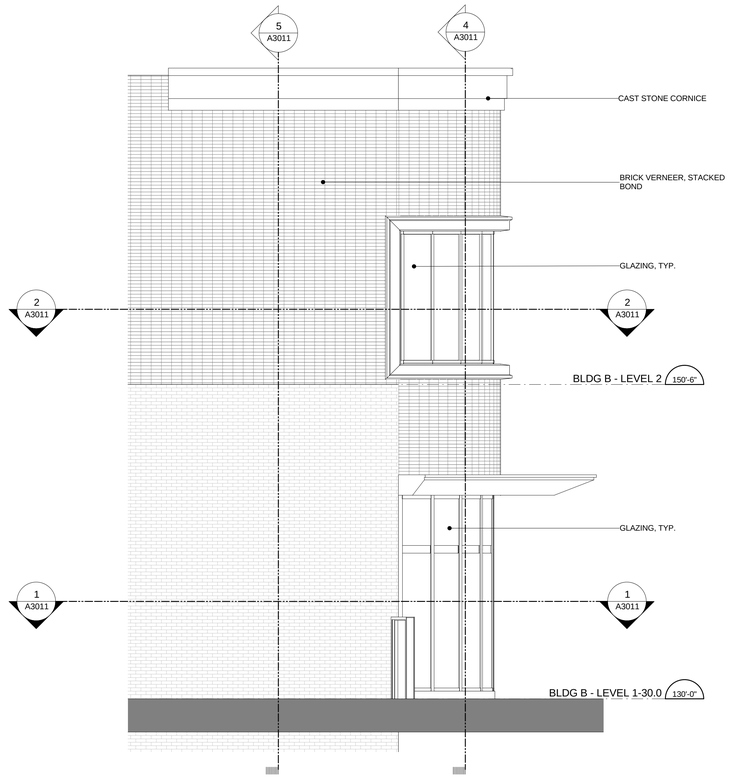

3 A3011 ENLARGED ELEVATION - S. EAST FACADE A
Scale: 1/4" = 1'-0"

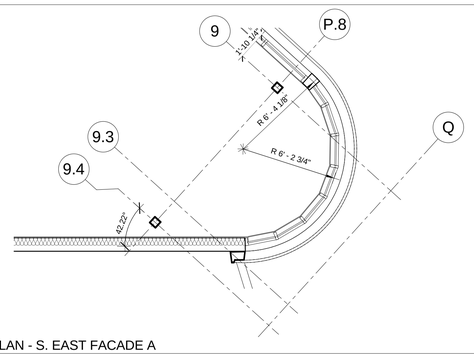

N PROJECT
N TRUE

2 A3011 PARTIAL SECOND FLOOR PLAN - S. EAST FACADE A
Scale: 1/4" = 1'-0"

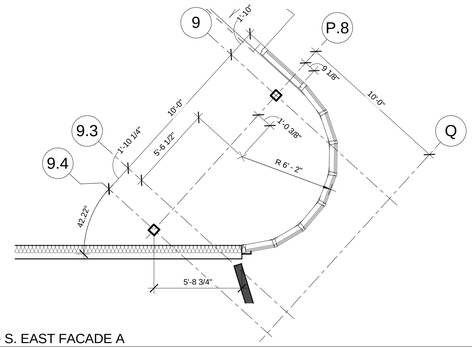

N PROJECT
N TRUE

1 A3011 PARTIAL FIRST FLOOR PLAN - S. EAST FACADE A
Scale: 1/4" = 1'-0"

CLIENT

CENTERCAL PROPERTIES, LLC

COPYRIGHT:

Any reproduction or distribution for any purpose other than authorized by IBI Group is forbidden. Written dimensions shall have precedence over scaled dimensions. Contractors shall verify and be responsible for all dimensions and conditions on the job. Any errors, omissions or conflicts must be reported from the dimensions and conditions shown on the drawing. Shop drawings shall be submitted to IBI Group for approval before proceeding with fabrication.

COPYRIGHT © 2016 IBI GROUP

ISSUES

NO.	ISSUANCE	STATUS	DATE

SEAL

10759 REGISTERED ARCHITECT
CRAIG ROTHENBURGER
STATE OF WASHINGTON

SUB CONSULTANT

PRIME CONSULTANT

IBI
ibigroup.com

PROJECT
The Village at Totem Lake - Building B
Kirkland, Washington

PROJECT NO:	Building B
DRAWN BY:	DC
CHKD' BY:	Checker
SCALE:	1/4" = 1'-0"
DATE:	05/26/2016

SHEET TITLE
ENLARGED ELEV, PART. PLAN & WALL SECTIONS - S. EAST A

BLDG	SHEET NUMBER	ISSUE
B	A3011	

C:\Users\bjan.shoieh\Documents\ATW_Totem_BldgB_A_2016_bjan.shoieh.rvt

5/26/2016 6:09:24 PM

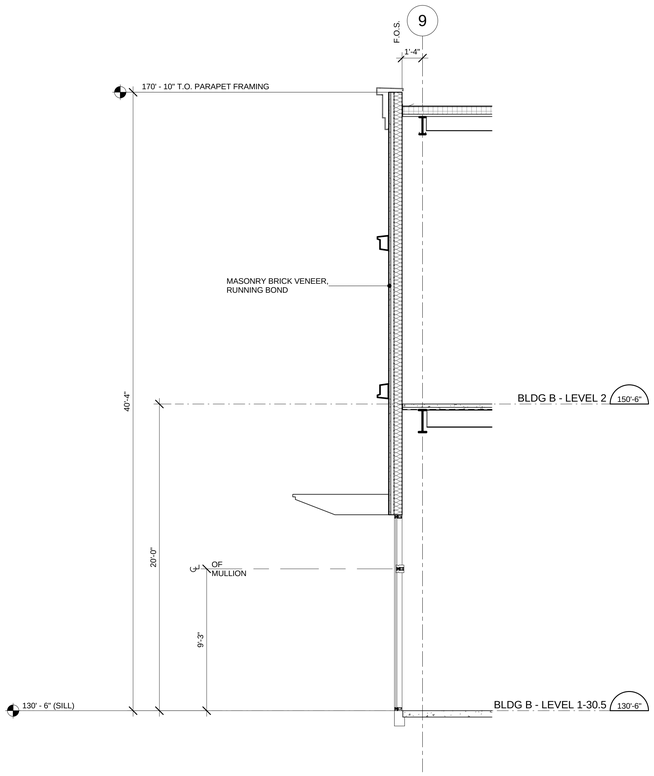

17 / A3012 WALL SECTION - SOUTHEAST FACADE

Scale: 1/4" = 1'-0"

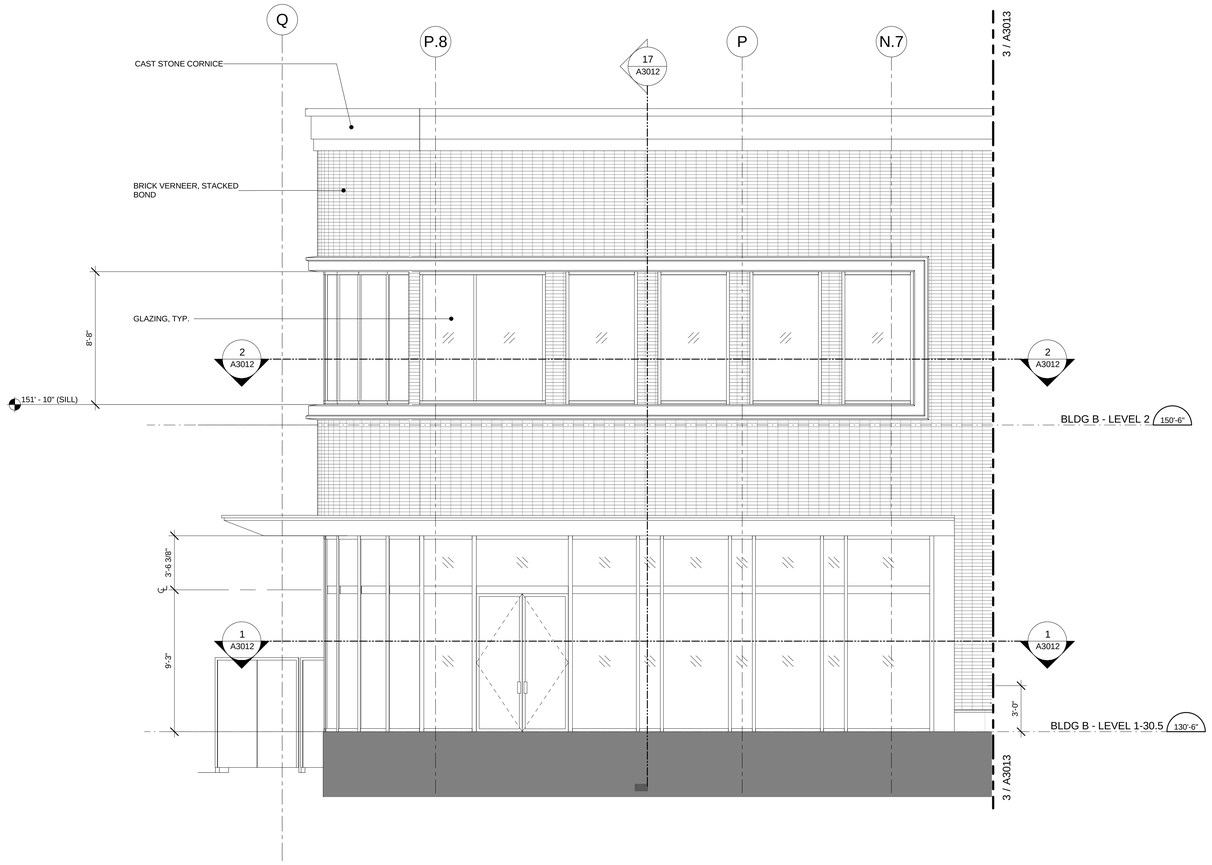

3 / A3012 ENLARGED ELEVATION - S. EAST B

Scale: 1/4" = 1'-0"

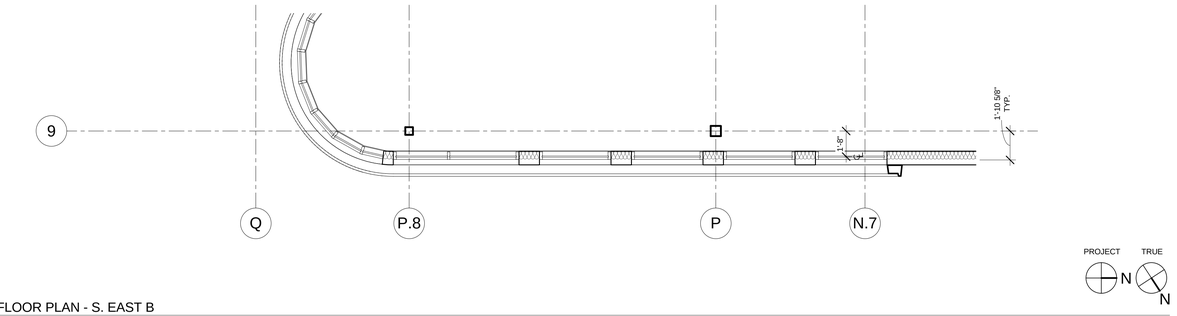

2 / A3012 PARTIAL SECOND FLOOR PLAN - S. EAST B

Scale: 1/4" = 1'-0"

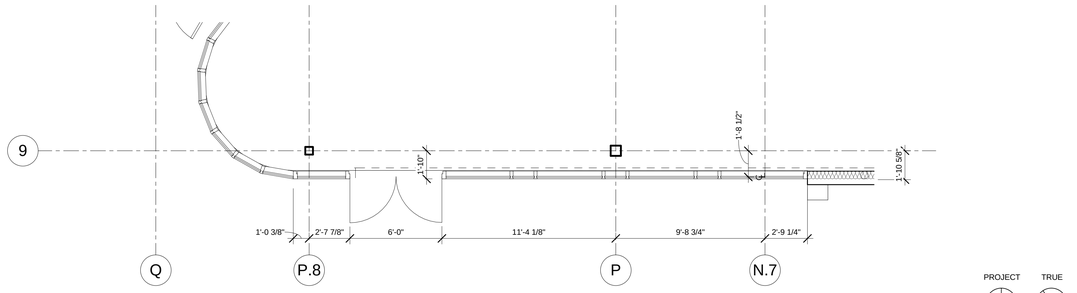

1 / A3012 PARTIAL FIRST FLOOR PLAN - S. EAST B

Scale: 1/4" = 1'-0"

CLIENT

CENTERCAL PROPERTIES, LLC

COPYRIGHT:

Any reproduction or distribution for any purpose other than authorized by IBI Group is forbidden. Written dimensions shall have precedence over scaled dimensions. Contractors shall verify and be responsible for all dimensions and conditions on the job, and report any errors or omissions to the architect then the dimensions and conditions shown on the drawing. Shop drawings shall be submitted to IBI Group for approval before proceeding with fabrication.

COPYRIGHT © 2016 IBI GROUP

ISSUES

NO.	ISSUANCE	STATUS	DATE
1	PROGRESS SET		5/26/2016

SEAL

10759 REGISTERED ARCHITECT

CRAIG ROTHENBURGER
STATE OF WASHINGTON

SUB CONSULTANT

PRIME CONSULTANT

IBI
ibigroup.com

PROJECT

The Village at Totem Lake - Building B
Kirkland, Washington

PROJECT NO:	Building B
DRAWN BY:	Author
CHKD' BY:	Checker
SCALE:	1/4" = 1'-0"
DATE:	05/26/2016

SHEET TITLE

ENLARGED ELEV, PART. PLAN & WALL SECTIONS - S. EAST B

BLDG	SHEET NUMBER	ISSUE
B	A3012	

C:\Users\ibigan.stoeckel\Documents\ATW_Totem_Bldg B_A_2016_jibian.stoeckel.rvt

5/26/2016 6:59:27 PM

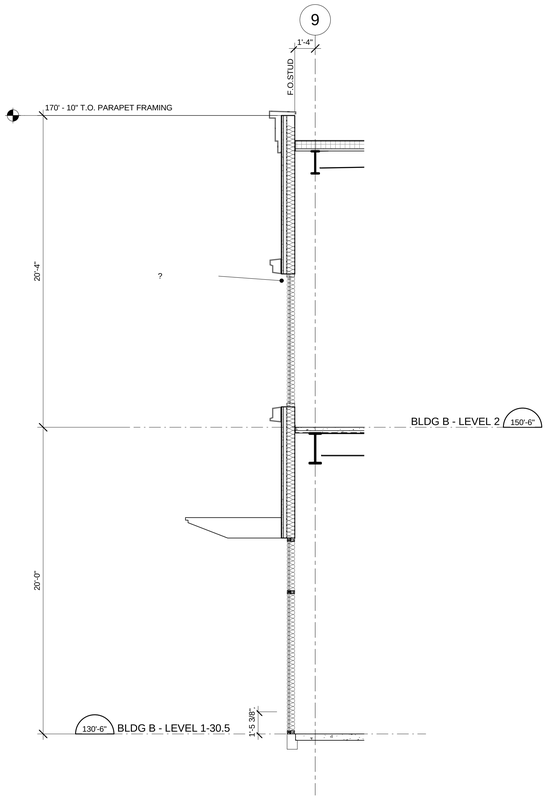

5 A3013 WALL SECTION 1 - S. EAST C
Scale: 1/4" = 1'-0"

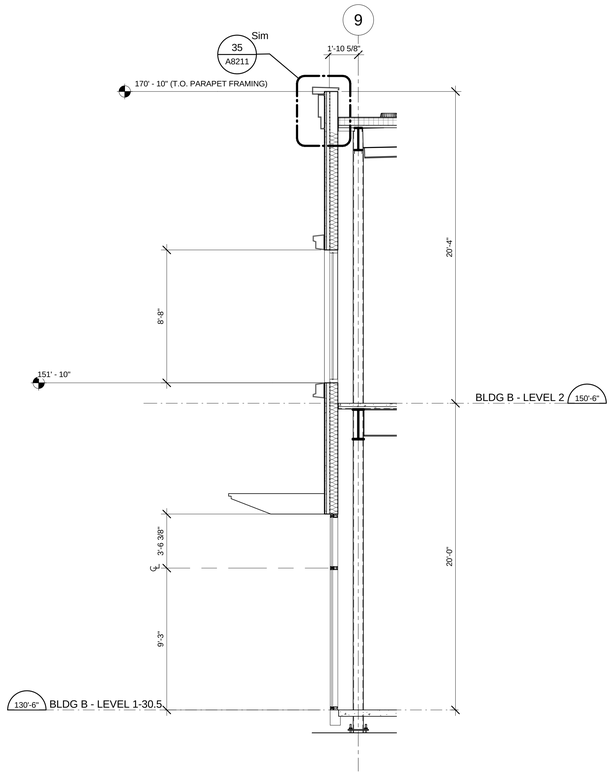

4 A3013 WALL SECTION 2 - S. EAST C
Scale: 1/4" = 1'-0"

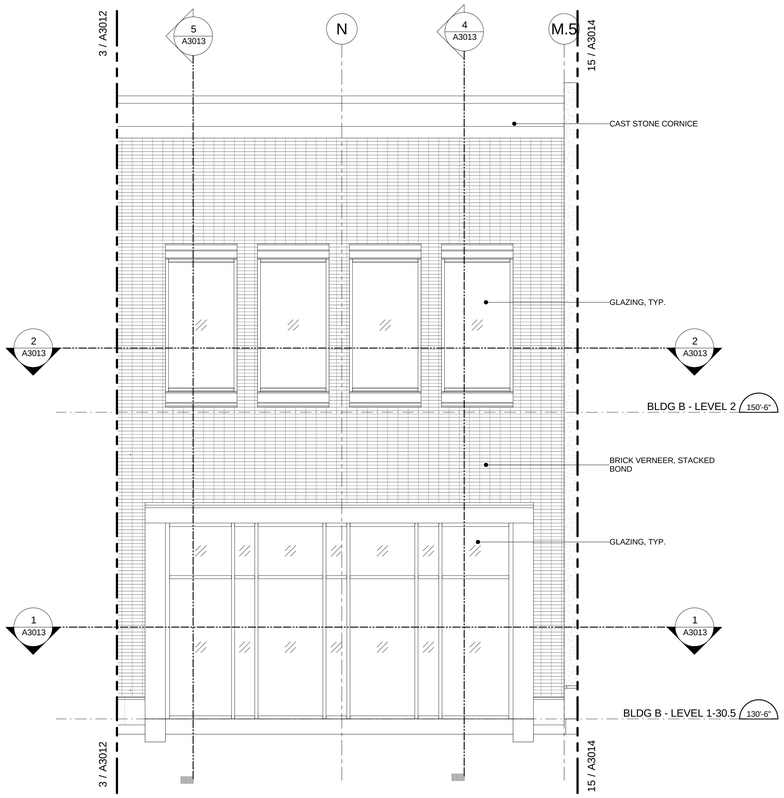

3 A3013 ENLARGED ELEVATION - S. EAST C
Scale: 1/4" = 1'-0"

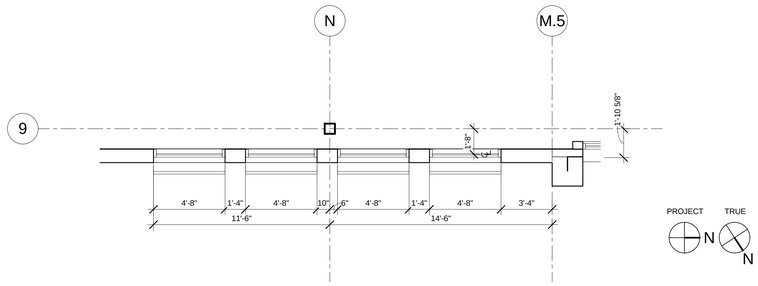

2 A3013 PARTIAL SECOND FLOOR PLAN - S. EAST C
Scale: 1/4" = 1'-0"

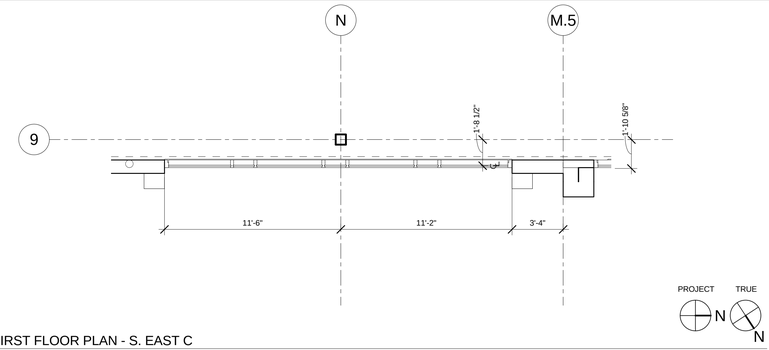

1 A3013 PARTIAL FIRST FLOOR PLAN - S. EAST C
Scale: 1/4" = 1'-0"

CLIENT

CENTERCAL PROPERTIES, LLC

COPYRIGHT:

Any reproduction or distribution for any purpose other than authorized by IBI Group is forbidden. Written dimensions shall have precedence over scaled dimensions. Contractors shall verify and be responsible for all dimensions and conditions on the job, and report any errors or omissions to the architect from the dimensions and conditions shown on the drawing. Shop drawings shall be submitted to IBI Group for approval before proceeding with fabrication.

COPYRIGHT © 2016 IBI GROUP

ISSUES

NO.	ISSUANCE	STATUS	DATE

SEAL

10759 REGISTERED ARCHITECT
CRAIG ROTHENBURGER
STATE OF WASHINGTON

SUB CONSULTANT

PRIME CONSULTANT

IBI
ibigroup.com

PROJECT
The Village at Totem Lake - Building B
Kirkland, Washington

PROJECT NO:	Building B
DRAWN BY:	Author
CHKD' BY:	Checker
SCALE:	1/4" = 1'-0"
DATE:	05/26/2016

SHEET TITLE
ENLARGED ELEV, PART. PLAN & WALL SECTIONS - S. EAST C

BLDG	SHEET NUMBER	ISSUE
B	A3013	

C:\Users\ibigan.stoeckel\Documents\ATW_Totem_Bldg B_A_2016_jibian.stoeckel.rvt

5/26/2016 6:59:33 PM

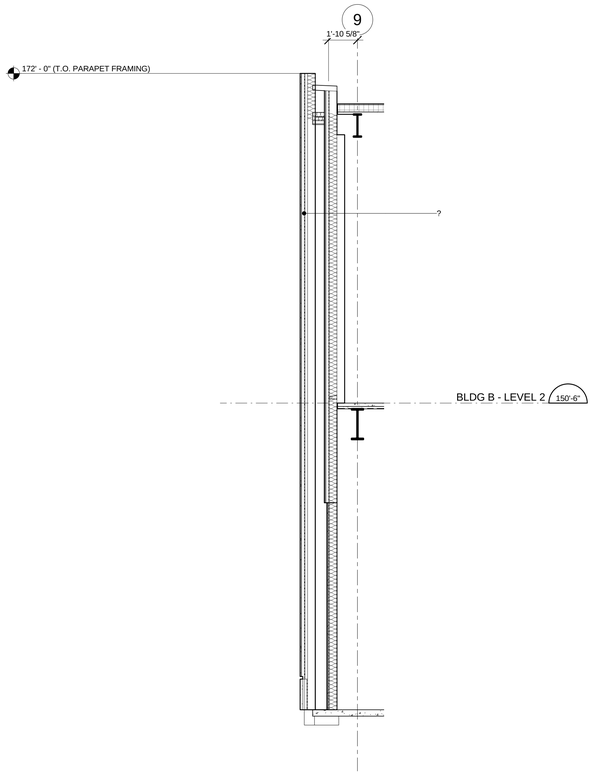

19 / A3014 STAIR SECTION 1 - EAST A
Scale: 1/4" = 1'-0"

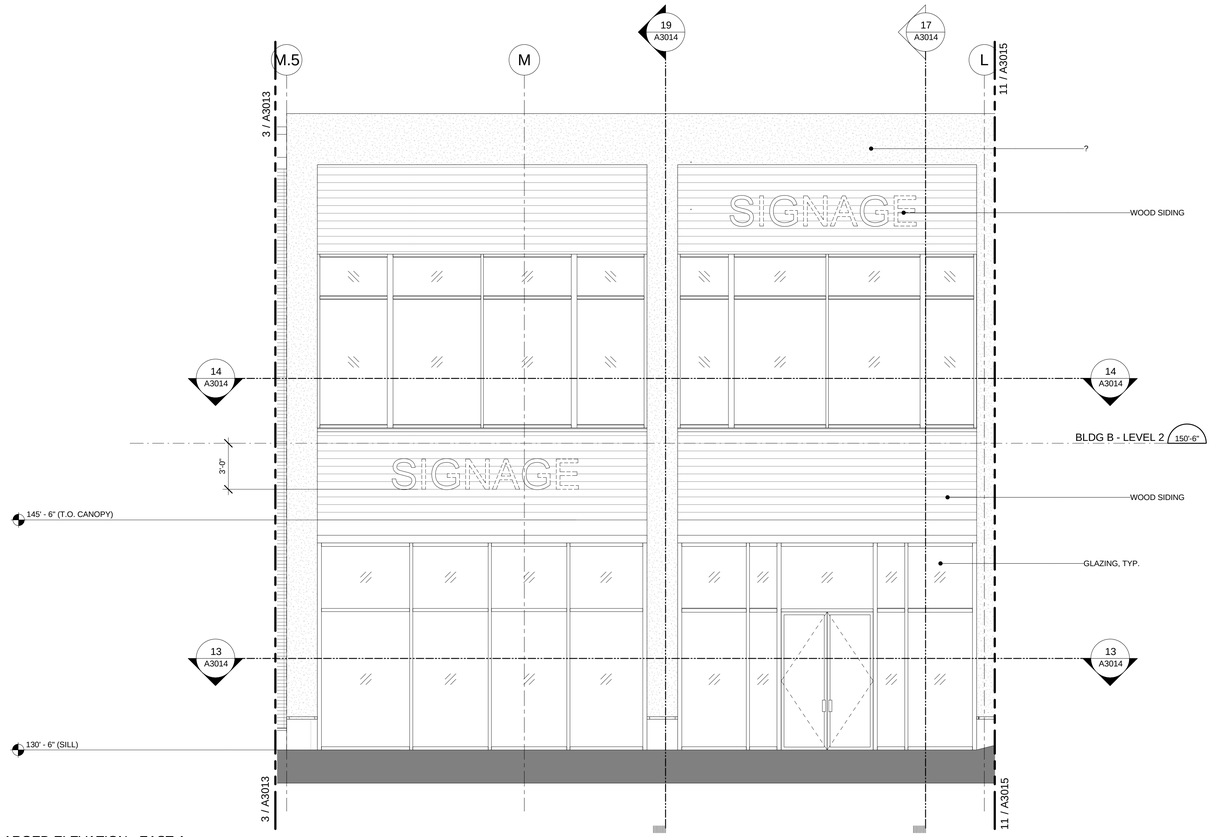

15 / A3014 ENLARGED ELEVATION - EAST A
Scale: 1/4" = 1'-0"

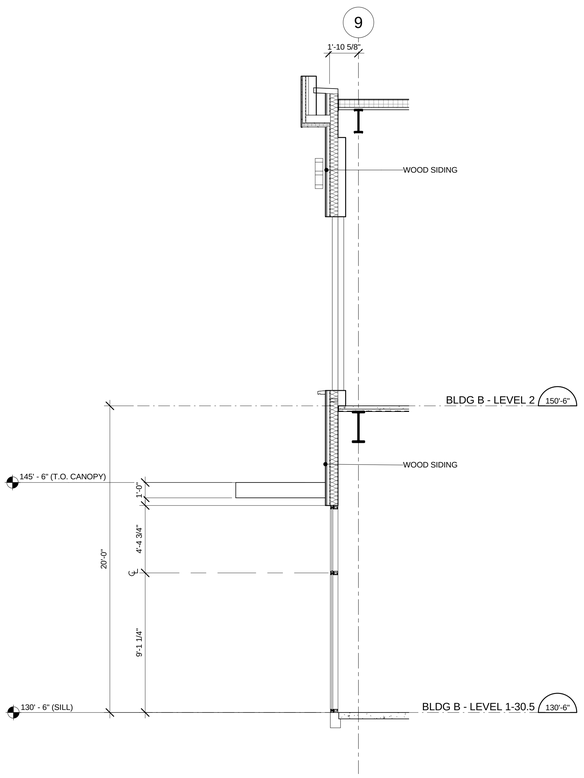

17 / A3014 WALL SECTION2 - EAST A
Scale: 1/4" = 1'-0"

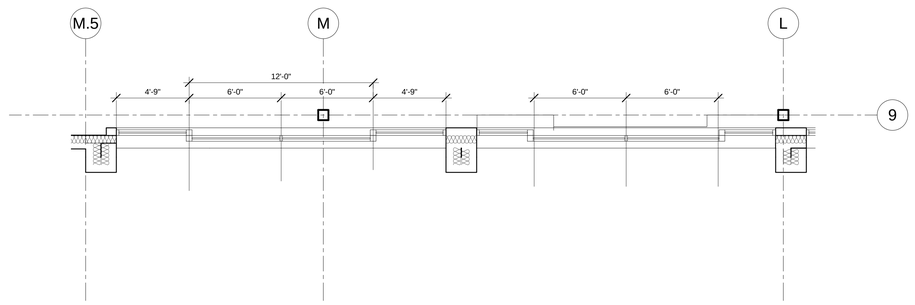

14 / A3014 PARTIAL SECOND FLOOR PLAN - EAST A
Scale: 1/4" = 1'-0"

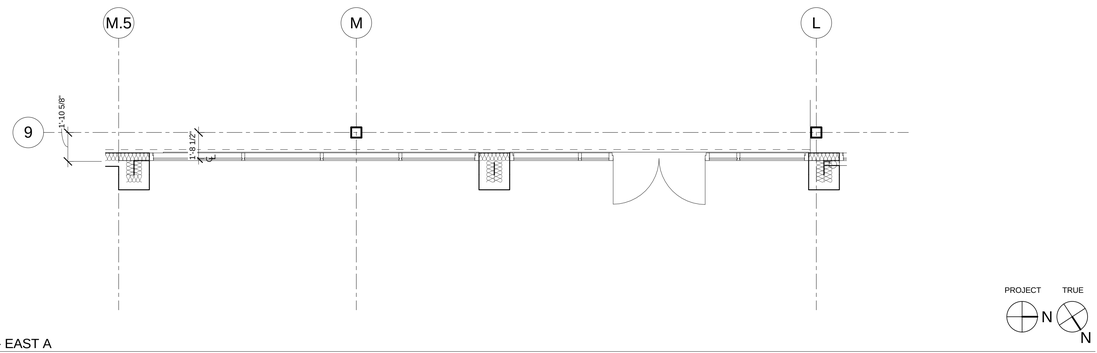

13 / A3014 PARTIAL FIRST FLOOR PLAN - EAST A
Scale: 1/4" = 1'-0"

CLIENT

CENTERCAL PROPERTIES, LLC

COPYRIGHT:

Any reproduction or distribution for any purpose other than authorized by IBI Group is forbidden. Written dimensions shall have precedence over scaled dimensions. Contractors shall verify and be responsible for all dimensions and conditions on the job, and report any errors, omissions or conflicts in them the dimensions and conditions shown on the drawing. Shop drawings shall be submitted to IBI Group for approval before proceeding with fabrication.

COPYRIGHT © 2016 IBI GROUP

ISSUES

NO.	ISSUANCE	STATUS	DATE
1	PROGRESS SET		5/26/2016

SEAL

10759 REGISTERED ARCHITECT
CRAIG ROTHENBURGER
STATE OF WASHINGTON

SUB CONSULTANT

PRIME CONSULTANT

IBI
ibigroup.com

PROJECT
The Village at Totem Lake - Building B
Kirkland, Washington

PROJECT NO:	Building B
DRAWN BY:	Author
CHKD' BY:	Checker
SCALE:	1/4" = 1'-0"
DATE:	05/26/2016

SHEET TITLE
ENLARGED ELEV, PART. PLAN & WALL SECTIONS - EAST A

BLDG	SHEET NUMBER	ISSUE
B	A3014	

C:\Users\bjan.shoieh\Documents\ATW_Totem_BldgB_A_2015_bjan.shoieh.rvt

5/26/2016 6:09:34 PM

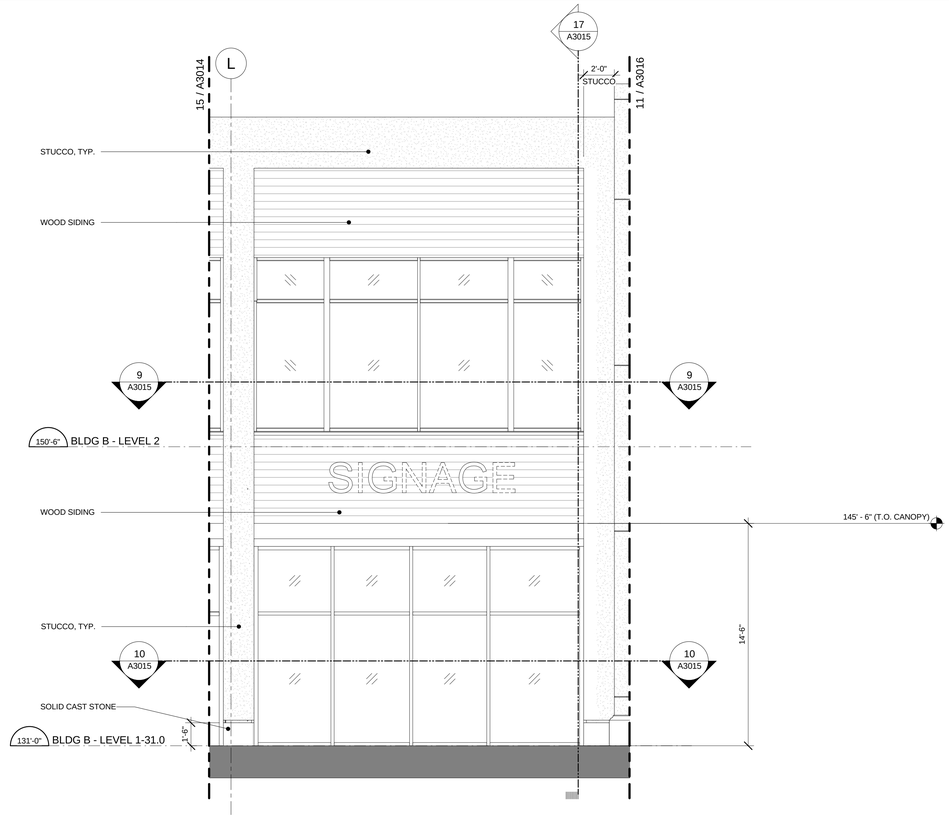

11 A3015 ENLARGED ELEVATION - EAST B
Scale: 1/4" = 1'-0"

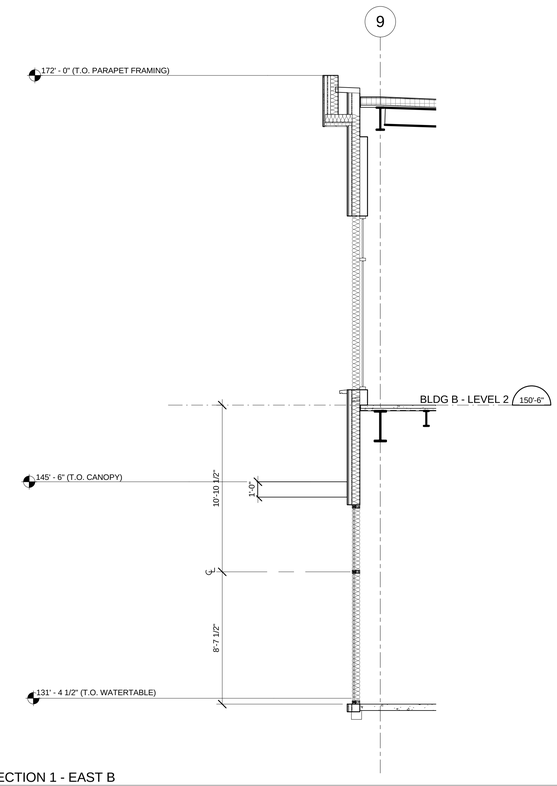

17 A3015 WALL SECTION 1 - EAST B
Scale: 1/4" = 1'-0"

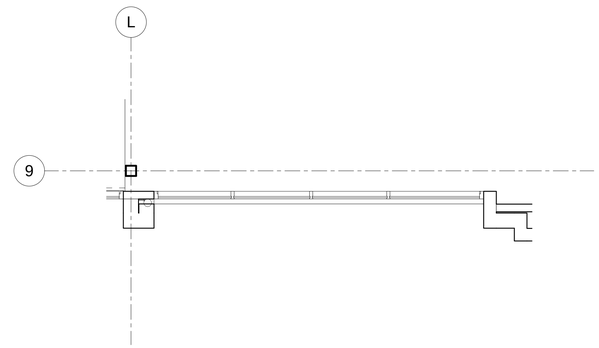

PROJECT TRUE
N N

10 A3015 PARTIAL SECOND FLOOR PLAN - EAST B
Scale: 1/4" = 1'-0"

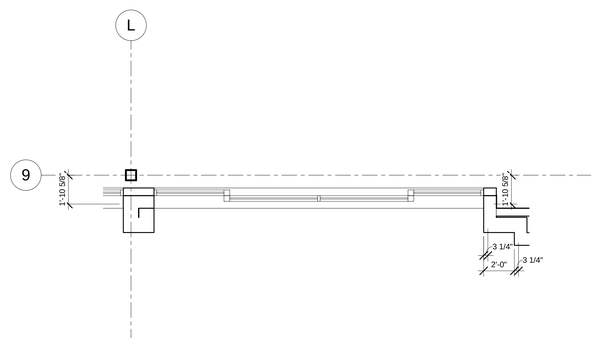

PROJECT TRUE
N N

9 A3015 PARTIAL FIRST FLOOR PLAN - EAST B
Scale: 1/4" = 1'-0"

CLIENT

CENTERCAL PROPERTIES, LLC

COPYRIGHT:

Any reproduction or distribution for any purpose other than authorized by IBI Group is forbidden. Written dimensions shall have precedence over scaled dimensions. Contractors shall verify and be responsible for all dimensions and conditions on the job, and report any errors or omissions to the architect then the dimensions and conditions shown on the drawing. Shop drawings shall be submitted to IBI Group for approval before proceeding with fabrication.

COPYRIGHT © 2016 IBI GROUP

ISSUES

NO.	ISSUANCE	STATUS	DATE

SEAL

10759 REGISTERED ARCHITECT
CRAIG ROTHENBURGER
STATE OF WASHINGTON

SUB CONSULTANT

PRIME CONSULTANT

IBI
ibigroup.com

PROJECT
The Village at Totem Lake - Building B
Kirkland, Washington

PROJECT NO:	Building B
DRAWN BY:	Author
CHKD' BY:	Checker
SCALE:	1/4" = 1'-0"
DATE:	05/26/2016

SHEET TITLE
ENLARGED ELEV, PART. PLAN & WALL SECTIONS - EAST B

BLDG	SHEET NUMBER	ISSUE
B	A3015	

C:\Users\bjan.shoieh\Documents\ATW_Totem_BldgB_A_2015_bjan.shoieh.rvt
5/26/2016 6:09:37 PM

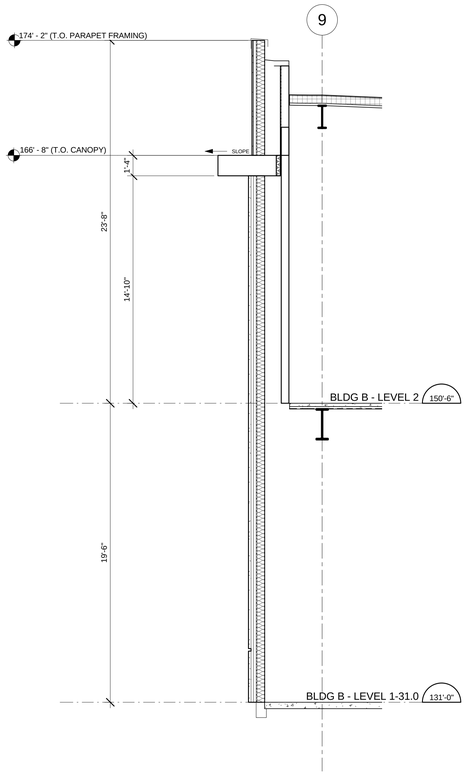

15 / A3016 WALL SECTION - N. EAST A
Scale: 1/4" = 1'-0"

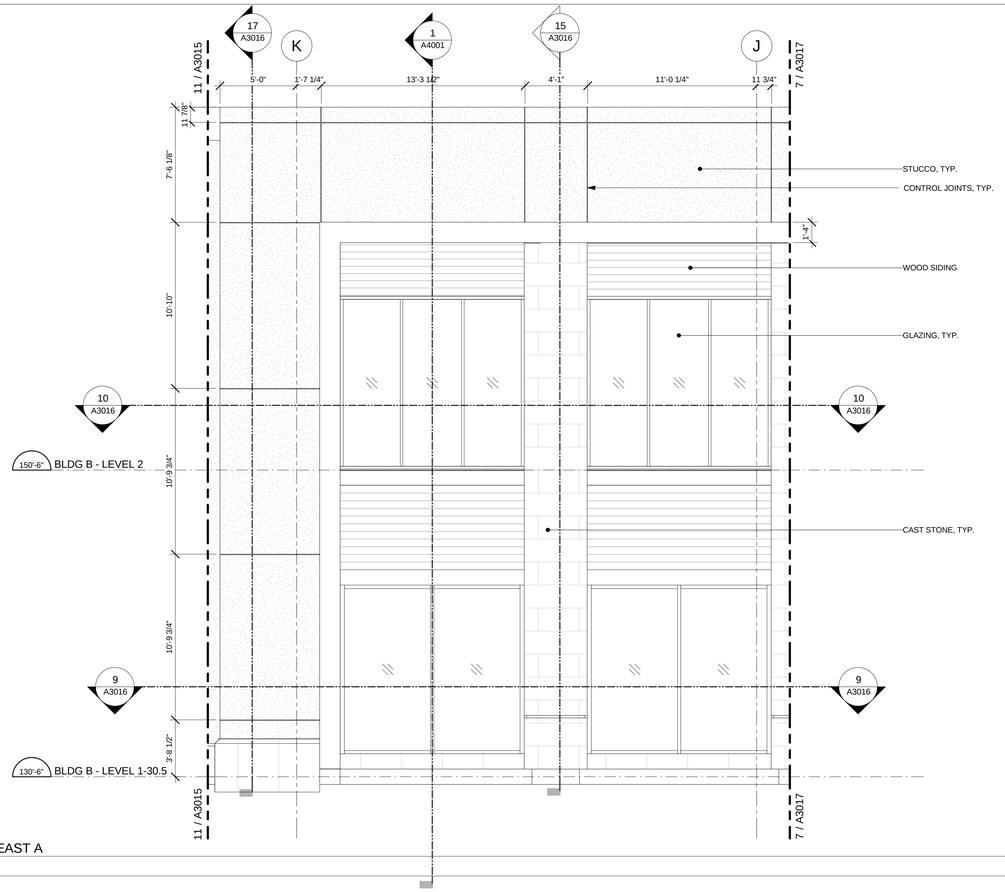

11 / A3016 ENLARGED ELEVATION - N. EAST A
Scale: 1/4" = 1'-0"

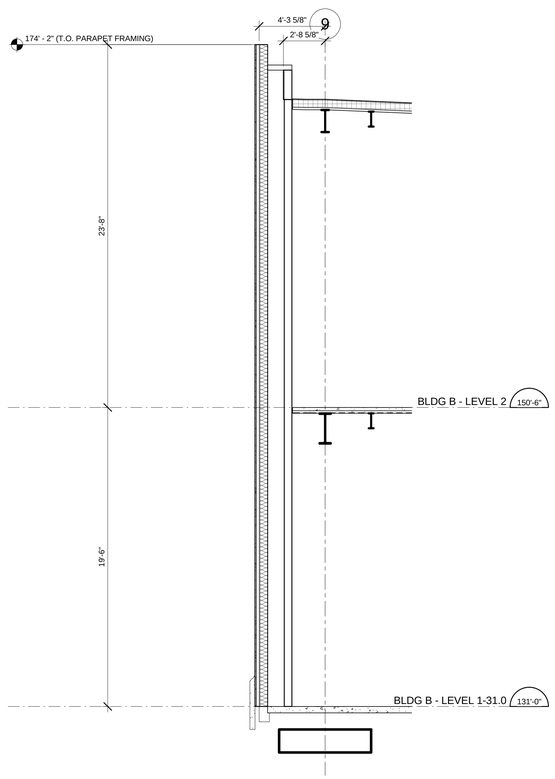

17 / A3016 WALL SECTION - N. EAST A
Scale: 1/4" = 1'-0"

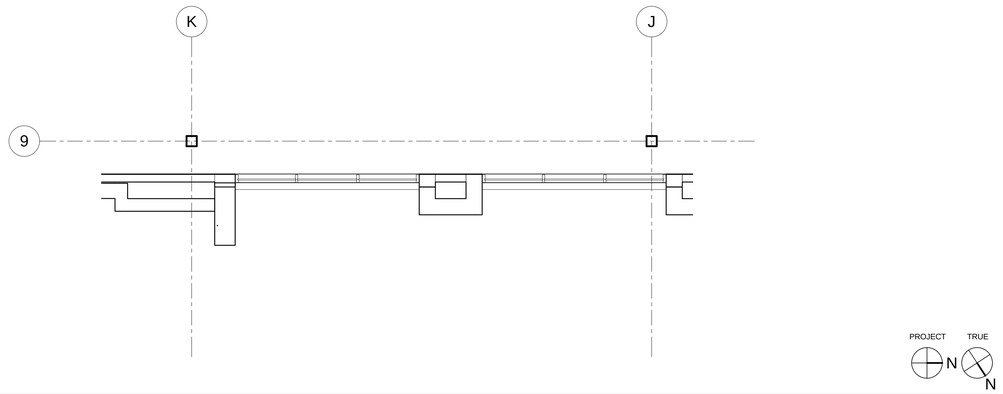

10 / A3016 PARTIAL SECOND FLOOR PLAN - N. EAST A
Scale: 1/4" = 1'-0"

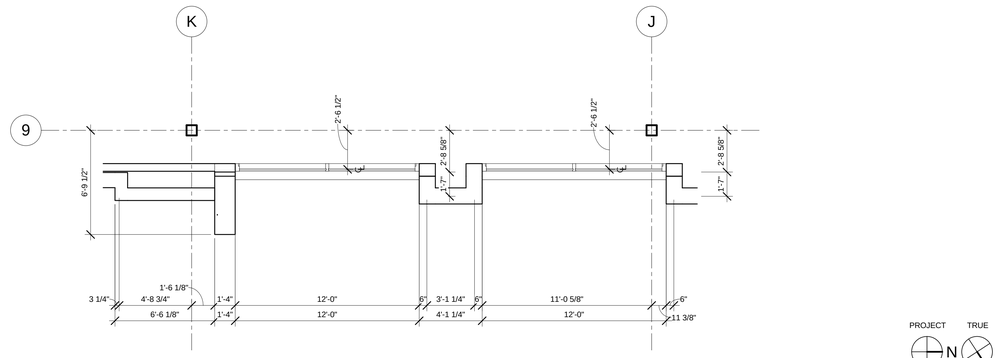

9 / A3016 PARTIAL FIRST FLOOR PLAN - N. EAST A
Scale: 1/4" = 1'-0"

CLIENT

CENTERCAL PROPERTIES, LLC

COPYRIGHT:

Any reproduction or distribution for any purpose other than authorized by IBI Group is forbidden. Written dimensions shall have precedence over scaled dimensions. Contractors shall verify and be responsible for all dimensions and conditions on the job, and report any errors, omissions or conflicts from the dimensions and conditions shown on the drawing. Shop drawings shall be submitted to IBI Group for approval before proceeding with fabrication.

COPYRIGHT © 2016 IBI GROUP

ISSUES

NO.	ISSUANCE	STATUS	DATE

SEAL

10759 REGISTERED ARCHITECT
CRAIG ROTHENBURGER
STATE OF WASHINGTON

SUB CONSULTANT

PRIME CONSULTANT

IBI
ibigroup.com

PROJECT
The Village at Totem Lake - Building B
Kirkland, Washington

PROJECT NO:	Building B
DRAWN BY:	Author
CHKD' BY:	Checker
SCALE:	1/4" = 1'-0"
DATE:	05/26/2016

SHEET TITLE
ENLARGED ELEV, PART. PLAN & WALL SECTIONS - N. EAST A

BLDG	SHEET NUMBER	ISSUE
B	A3016	

C:\Users\bjan.shoieh\Documents\ATW_Totem_BldgB_2_2015_bjan.shoieh.rvt

5/26/2016 6:09:40 PM

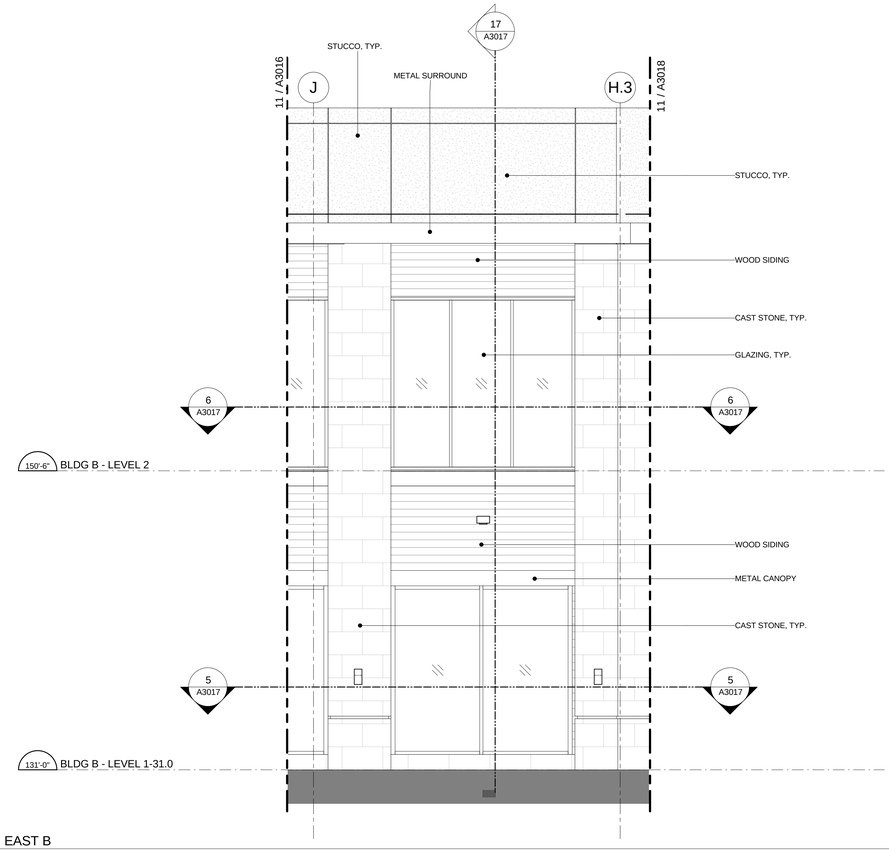

7 A3017 ENLARGED ELEVATION - N. EAST B
Scale: 1/4" = 1'-0"

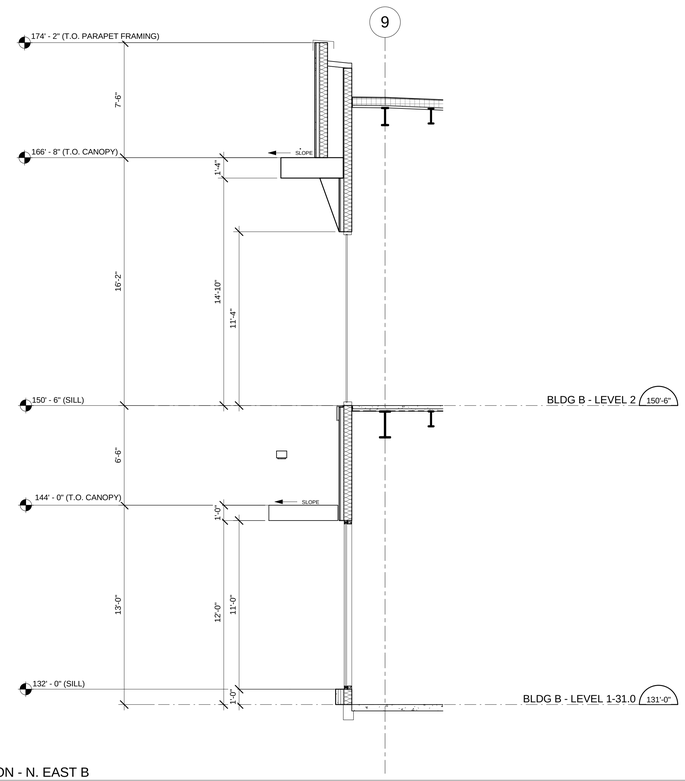

17 A3017 WALL SECTION - N. EAST B
Scale: 1/4" = 1'-0"

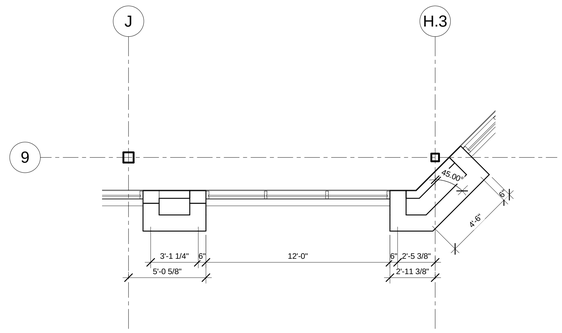

6 A3017 PARTIAL SECOND FLOOR PLAN - N. EAST B
Scale: 1/4" = 1'-0"

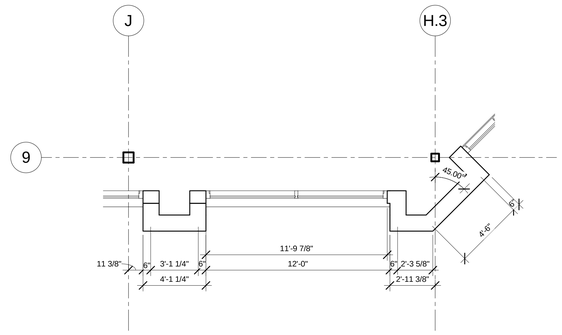

5 A3017 PARTIAL FIRST FLOOR PLAN - N. EAST B
Scale: 1/4" = 1'-0"

PROJECT N TRUE N

CLIENT
CENTERCAL PROPERTIES, LLC

COPYRIGHT:
Any reproduction or distribution for any purpose other than authorized by IBI Group is forbidden. Written dimensions shall have precedence over scaled dimensions. Contractors shall verify and be responsible for all dimensions and conditions on the job, and report any errors, omissions or conflicts in them the dimensions and conditions shown on the drawing. Shop drawings shall be submitted to IBI Group for approval before proceeding with fabrication.

COPYRIGHT © 2016 IBI GROUP

ISSUES

NO.	ISSUANCE	STATUS	DATE

SEAL
10759 REGISTERED ARCHITECT
CRAIG ROTHENBURGER
STATE OF WASHINGTON

SUB CONSULTANT

PRIME CONSULTANT
IBI
ibigroup.com

PROJECT
The Village at Totem Lake - Building B
Kirkland, Washington

PROJECT NO:	Building B
DRAWN BY:	Author
CHKD' BY:	Checker
SCALE:	1/4" = 1'-0"
DATE:	05/26/2016

SHEET TITLE
ENLARGED ELEV, PART. PLAN & WALL SECTIONS - N. EAST B

BLDG	SHEET NUMBER	ISSUE
B	A3017	

C:\Users\bjan.shoieh\Documents\ATW_Totem_B\bjgB_A_2016_bjan.shoieh.rvt
5/26/2016 6:09:43 PM

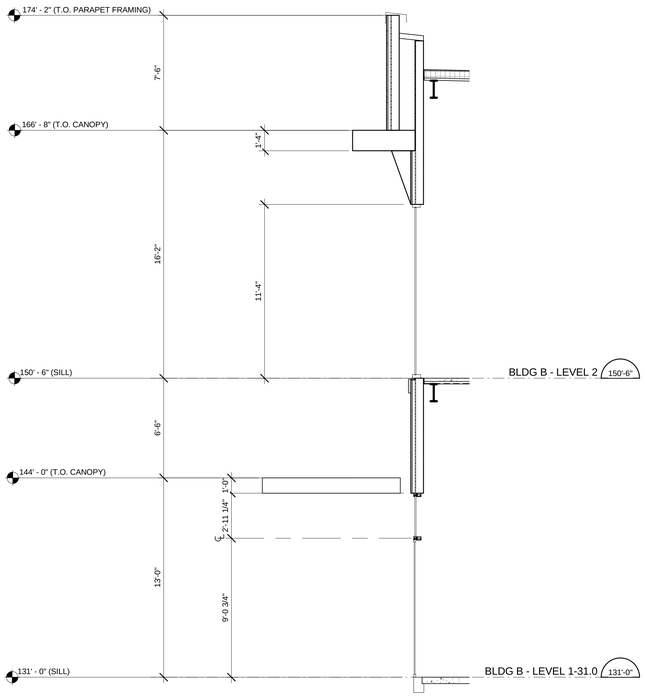

19 A3018 WALL SECTION - N. EAST C
Scale: 1/4" = 1'-0"

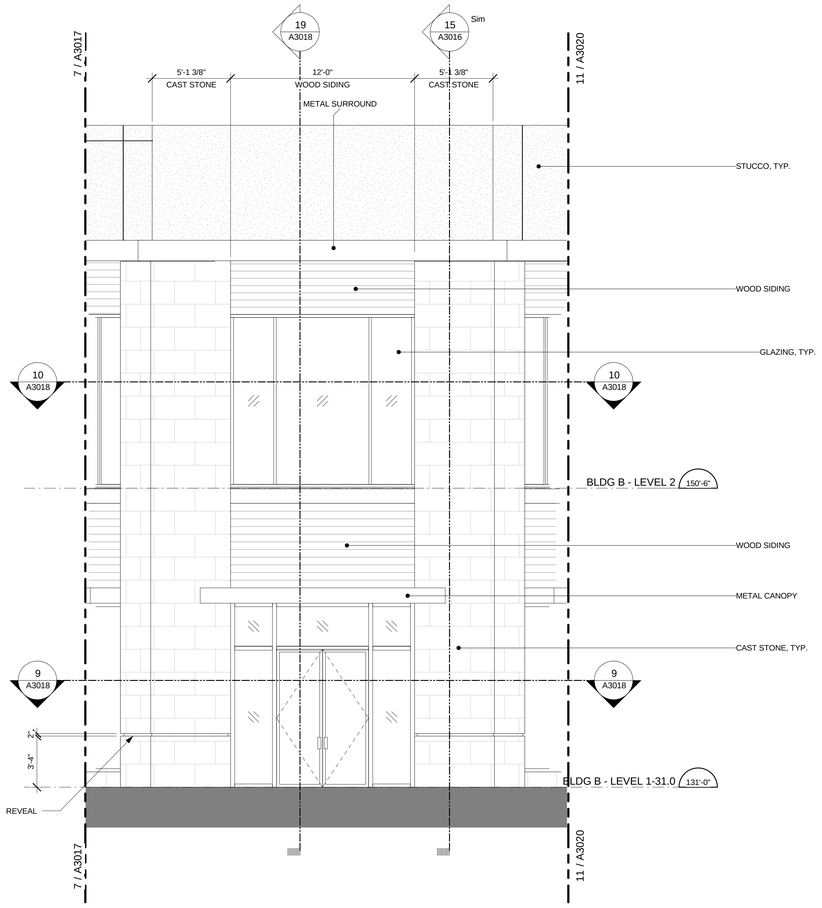

11 A3018 ENLARGED ELEVATION - N. EAST C
Scale: 1/4" = 1'-0"

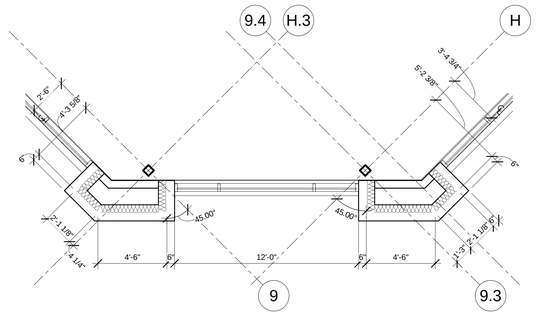

10 A3018 PARTIAL SECOND FLOOR PLAN - N. EAST C
Scale: 1/4" = 1'-0"

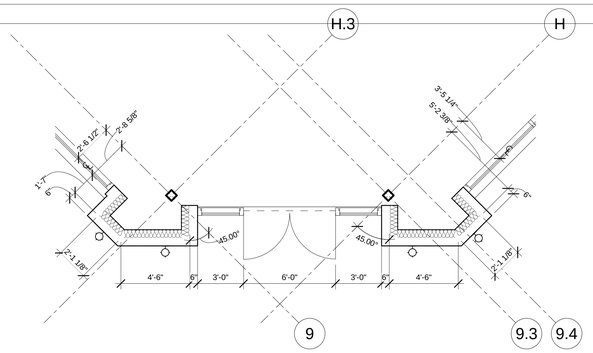

9 A3018 PARTIAL FIRST FLOOR PLAN - N. EAST C
Scale: 1/4" = 1'-0"

CLIENT

CENTERCAL PROPERTIES, LLC

COPYRIGHT:

Any reproduction or distribution for any purpose other than authorized by IBI Group is forbidden. Written dimensions shall have precedence over scaled dimensions. Contractors shall verify and be responsible for all dimensions and conditions on the job, and report any errors, omissions or conflicts in them the dimensions and conditions shown on the drawing. Shop drawings shall be submitted to IBI Group for approval before proceeding with fabrication.

COPYRIGHT © 2016 IBI GROUP

ISSUES

NO.	ISSUANCE	STATUS	DATE

SEAL

10759 REGISTERED ARCHITECT
CRAIG ROTHENBURGER
STATE OF WASHINGTON

SUB CONSULTANT

PRIME CONSULTANT

IBI
ibigroup.com

PROJECT
The Village at Totem Lake - Building B
Kirkland, Washington

PROJECT NO:	Building B
DRAWN BY:	Author
CHKD' BY:	Checker
SCALE:	1/4" = 1'-0"
DATE:	05/26/2016

SHEET TITLE
ENLARGED ELEV, PART. PLAN & WALL SECTIONS - N. EAST C

BLDG	SHEET NUMBER	ISSUE
B	A3018	

5/26/2016 6:59:46 PM C:\Users\jian.shreeh\Documents\ATW_Totem_Bldg\B_A_2016_bjian.shreeh.rvt

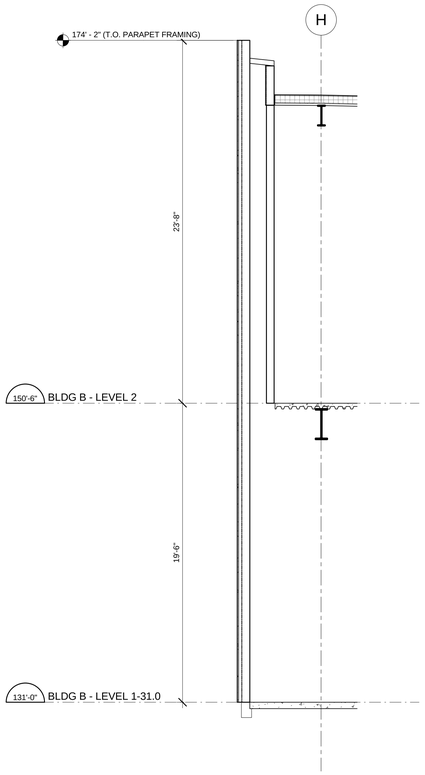

15 A3020 WALL SECTION 1 - N. EAST D
Scale: 1/4" = 1'-0"

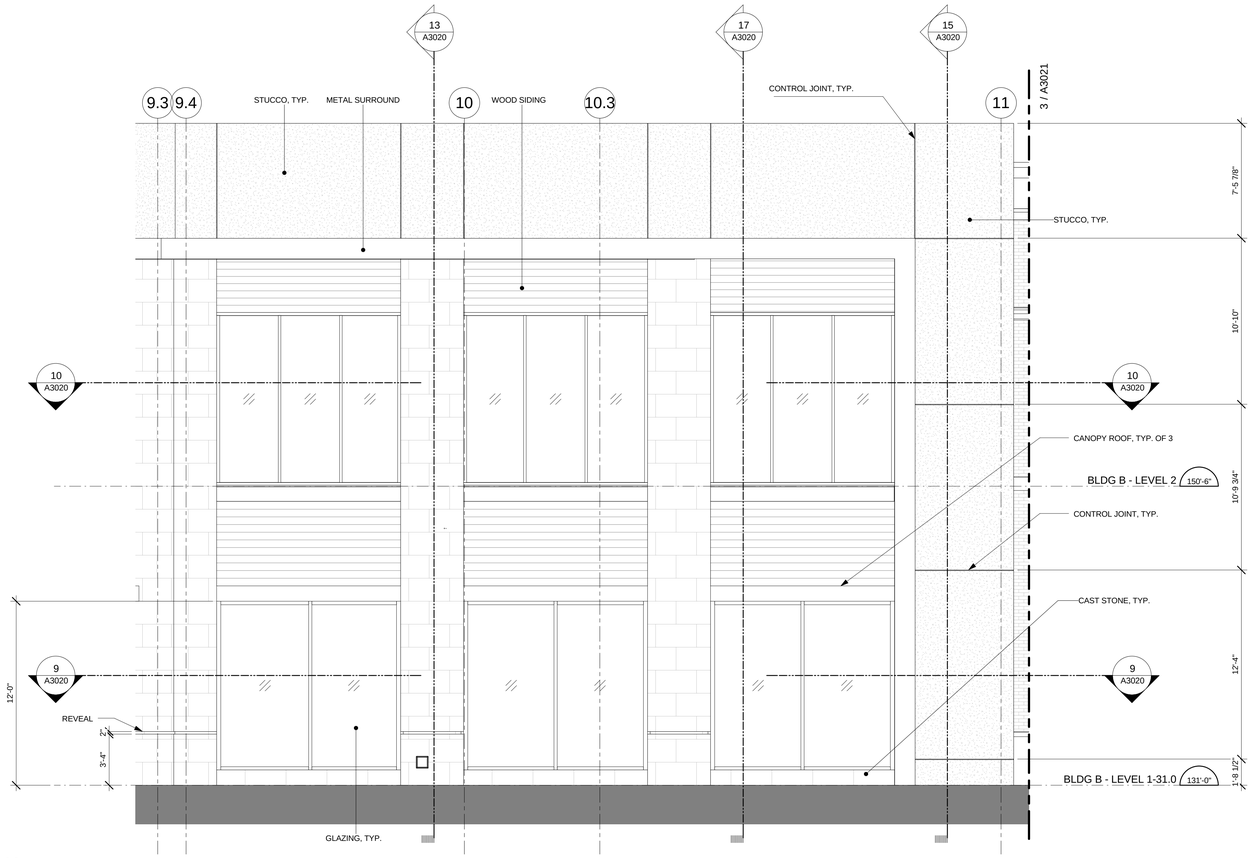

11 A3020 ENLARGED ELEVATION - N. EAST D
Scale: 1/4" = 1'-0"

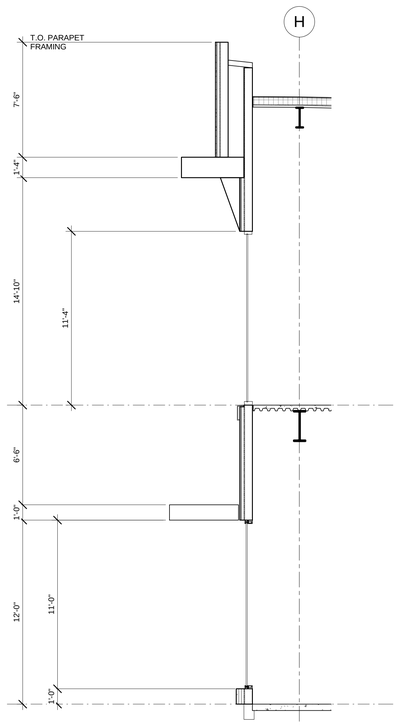

17 A3020 WALL SECTION 2 - N. EAST D
Scale: 1/4" = 1'-0"

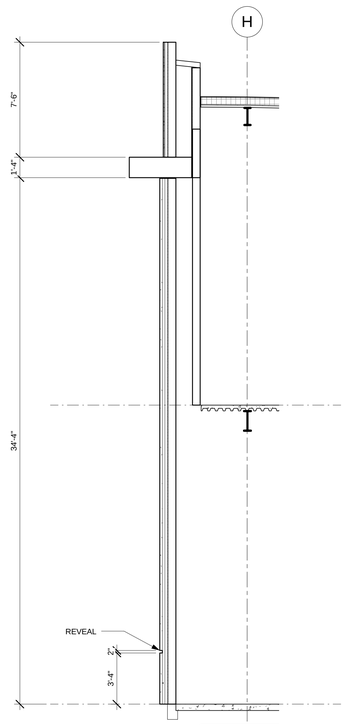

13 A3020 WALL SECTION 3 - N. EAST D
Scale: 1/4" = 1'-0"

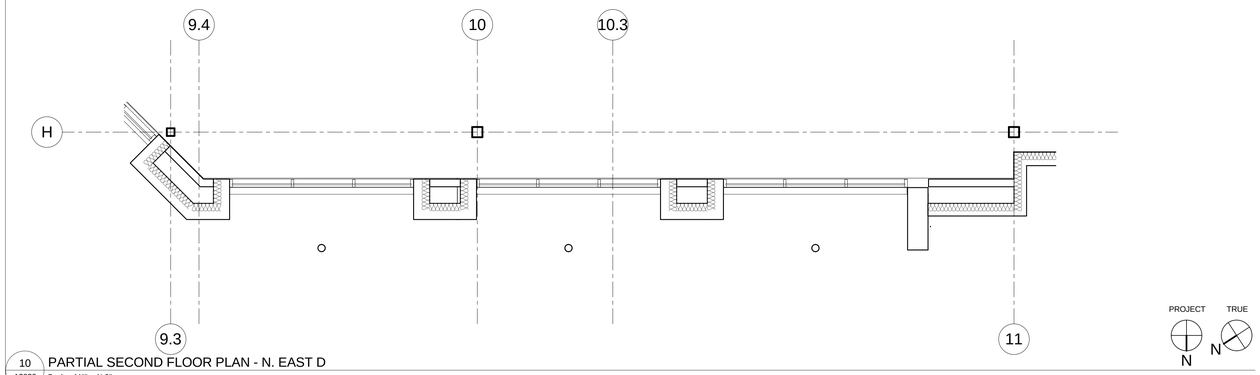

10 A3020 PARTIAL SECOND FLOOR PLAN - N. EAST D
Scale: 1/4" = 1'-0"

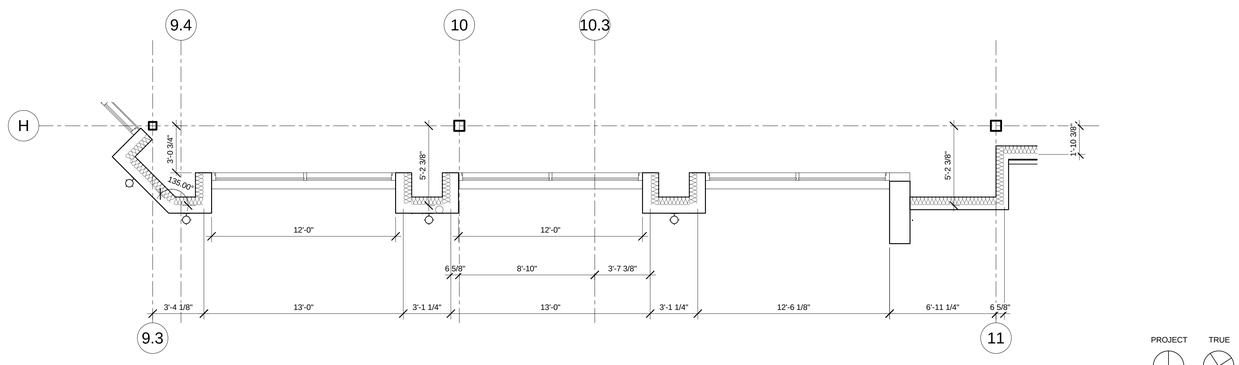

9 A3020 PARTIAL FIRST FLOOR PLAN - N. EAST D
Scale: 1/4" = 1'-0"

CLIENT

CENTERCAL PROPERTIES, LLC

COPYRIGHT:

Any reproduction or distribution for any purpose other than authorized by IBI Group is forbidden. Written dimensions shall have precedence over scaled dimensions. Contractors shall verify and be responsible for all dimensions and conditions on site. Any errors, omissions or discrepancies shall be reported to the dimensions and conditions shown on the drawing. Shop drawings shall be submitted to IBI Group for approval before proceeding with fabrication.

COPYRIGHT © 2016 IBI GROUP

ISSUES

NO.	ISSUANCE	STATUS	DATE
1	PROGRESS SET		5/26/2016

SEAL

10759 REGISTERED ARCHITECT
CRAIG ROTHENBURGER
STATE OF WASHINGTON

SUB CONSULTANT

PRIME CONSULTANT

IBI
ibigroup.com

PROJECT
The Village at Totem Lake - Building B
Kirkland, Washington

PROJECT NO:	Building B
DRAWN BY:	Author
CHKD' BY:	Checker
SCALE:	1/4" = 1'-0"
DATE:	05/26/2016

SHEET TITLE
ENLARGED ELEV, PART. PLAN & WALL SECTIONS - N. EAST D

BLDG	SHEET NUMBER	ISSUE
B	A3020	

C:\Users\bjan.shoesh\Documents\ATW_Totem_Bldg B_A_2016_bjan.shoesh.rvt

5/26/2016 6:59:53 PM

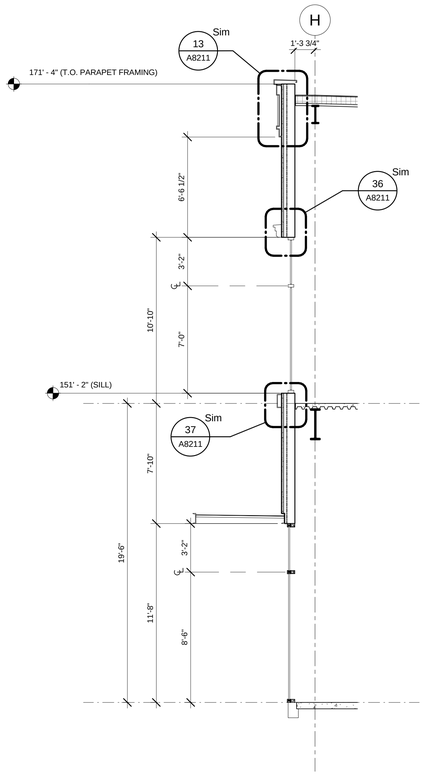

3A A3021 SECTION AT GLAZING - NORTH 1
Scale: 1/4" = 1'-0"

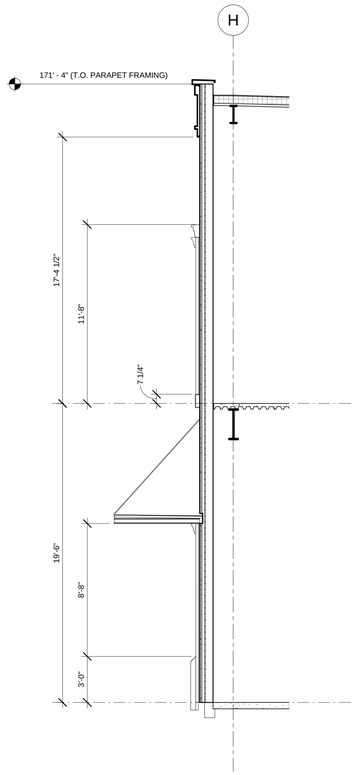

3B A3021 SECTION AT PILASTERS - NORTH 1
Scale: 1/4" = 1'-0"

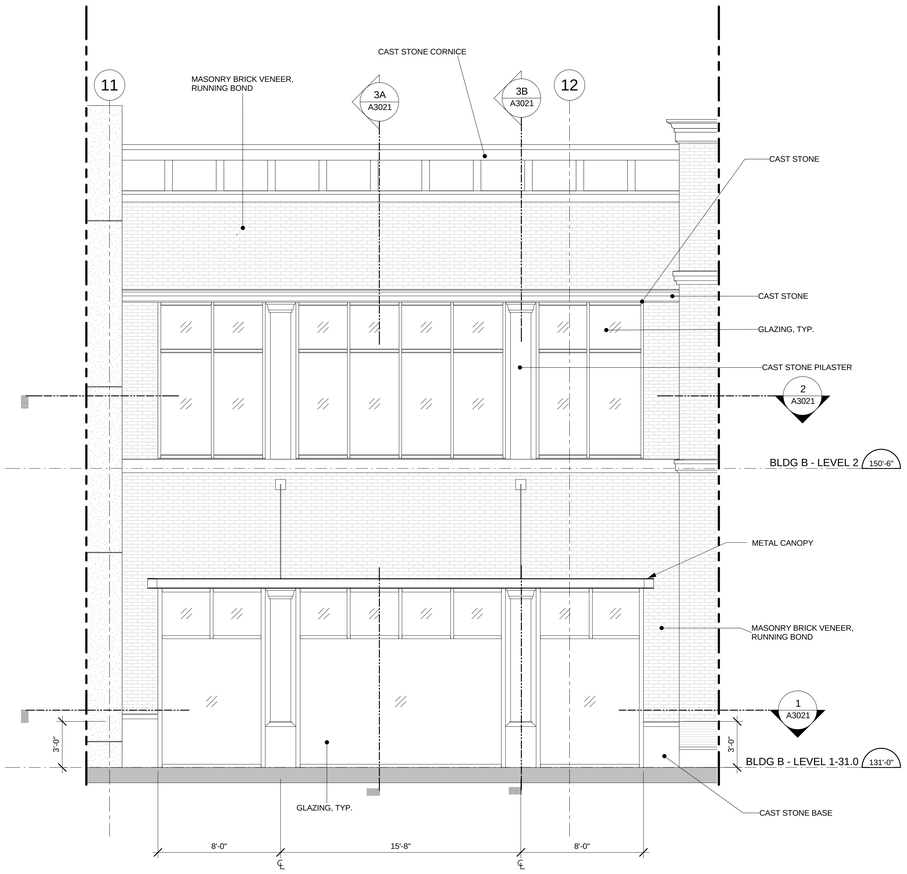

3 A3021 ENLARGED ELEVATION - NORTH 1
Scale: 1/4" = 1'-0"

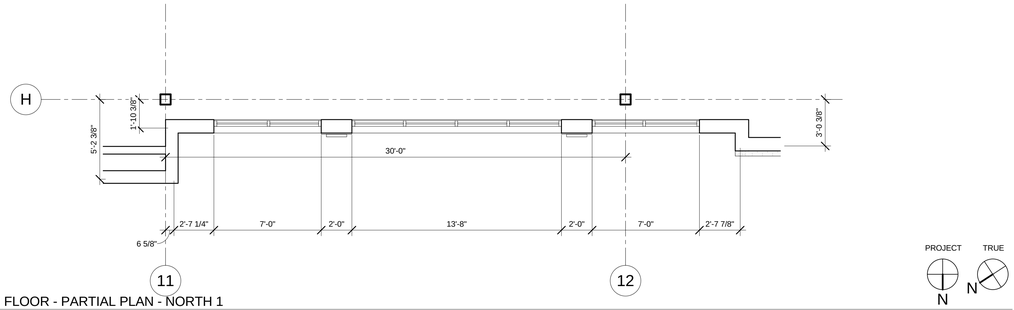

2 A3021 SECOND FLOOR - PARTIAL PLAN - NORTH 1
Scale: 1/4" = 1'-0"

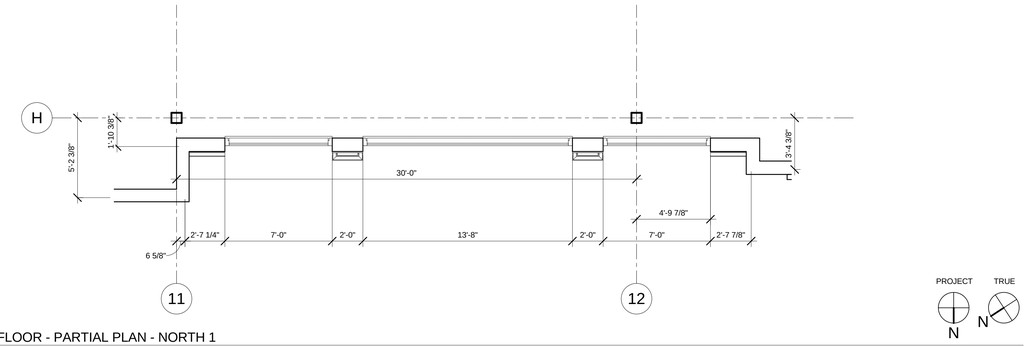

1 A3021 FIRST FLOOR - PARTIAL PLAN - NORTH 1
Scale: 1/4" = 1'-0"

CLIENT

CENTERCAL PROPERTIES, LLC

COPYRIGHT:

Any reproduction or distribution for any purpose other than authorized by IBI Group is forbidden. Written dimensions shall have precedence over scaled dimensions. Contractors shall verify and be responsible for all dimensions and conditions on this drawing. No ordinance, requirement or regulation shall then the dimensions and conditions shown on the drawing. Shop drawings shall be submitted to IBI Group for approval before proceeding with fabrication.

COPYRIGHT © 2016 IBI GROUP

ISSUES

NO.	ISSUANCE	STATUS	DATE

SEAL

10759 REGISTERED ARCHITECT
CRAIG ROTHENBURGER
STATE OF WASHINGTON

SUB CONSULTANT

PRIME CONSULTANT

IBI
ibigroup.com

PROJECT
The Village at Totem Lake - Building B
Kirkland, Washington

PROJECT NO:	Building B
DRAWN BY:	Author
CHKD' BY:	Checker
SCALE:	1/4" = 1'-0"
DATE:	05/26/2016

SHEET TITLE
ENLARGED ELEV, PART. PLAN & WALL SECTIONS - NORTH 1

BLDG	SHEET NUMBER	ISSUE
B	A3021	

5/26/2016 6:59:56 PM C:\Users\bjan.shoesh\Documents\ATW_Totem_Bldg B_A_2016_bjan.shoesh.rvt

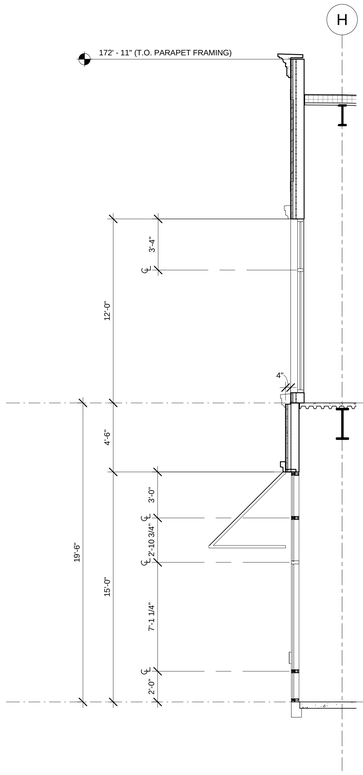

3A A3022 SECTION AT WINDOWS - NORTH 2
Scale: 1/4" = 1'-0"

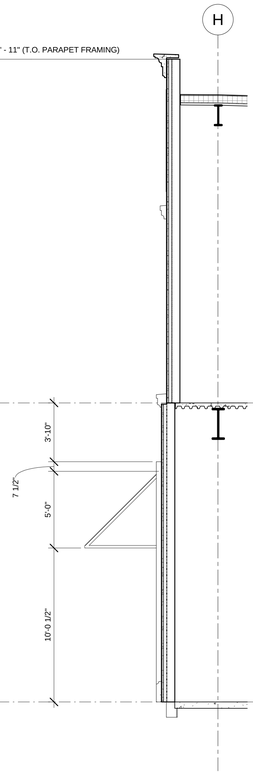

3B A3022 SECTION AT PILASTER - NORTH 2
Scale: 1/4" = 1'-0"

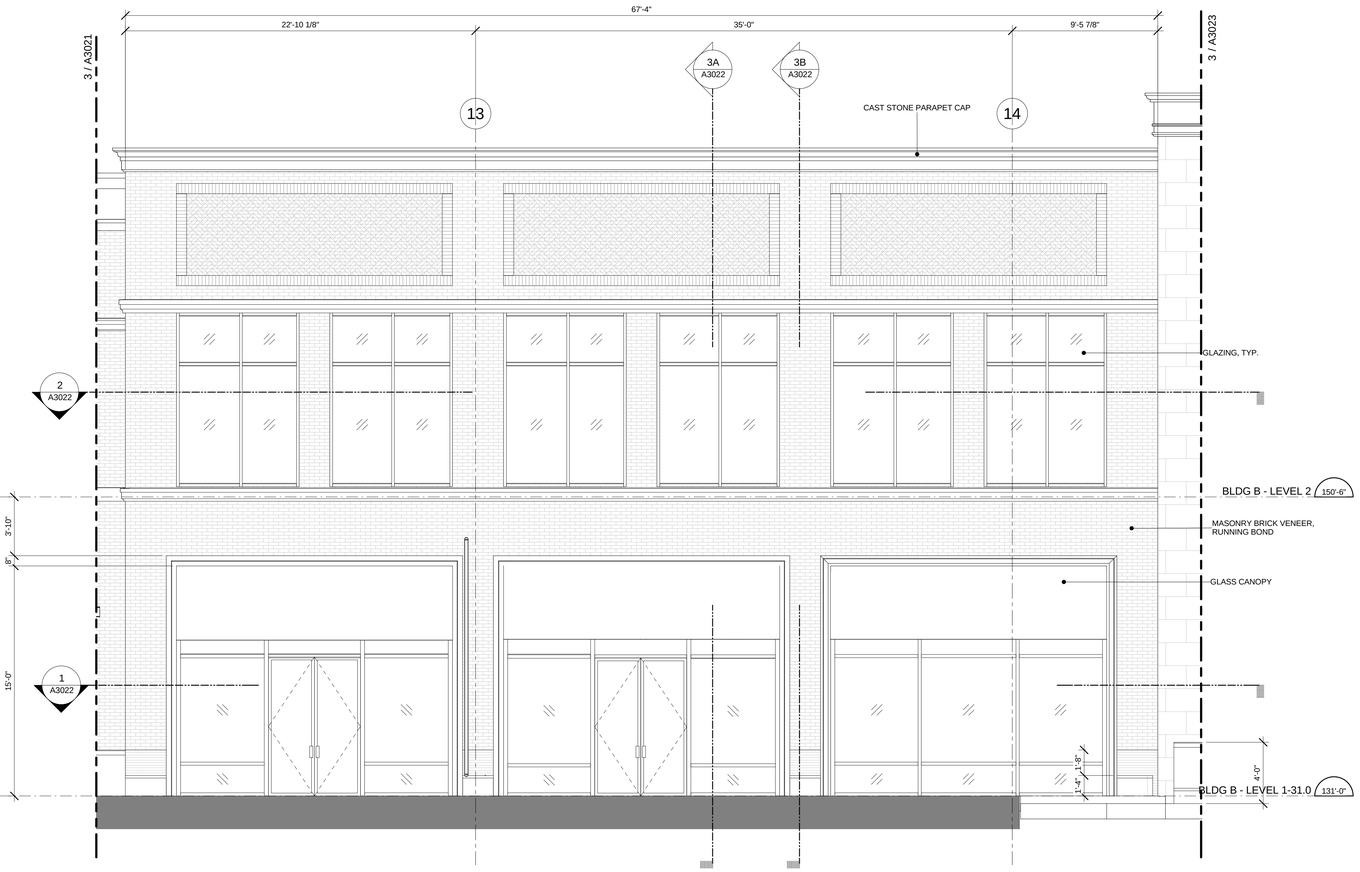

3 A3022 ENLARGED ELEVATION - NORTH 2
Scale: 1/4" = 1'-0"

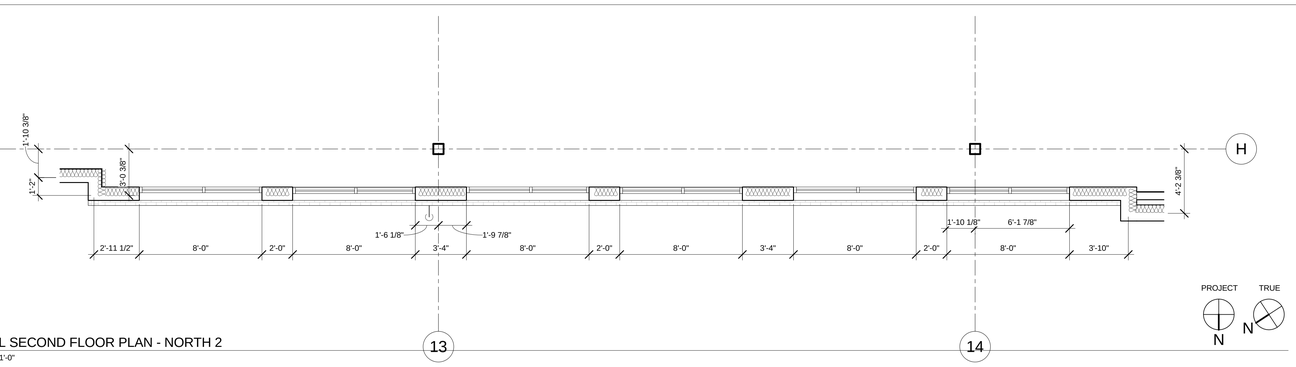

2 A3022 PARTIAL SECOND FLOOR PLAN - NORTH 2
Scale: 1/4" = 1'-0"

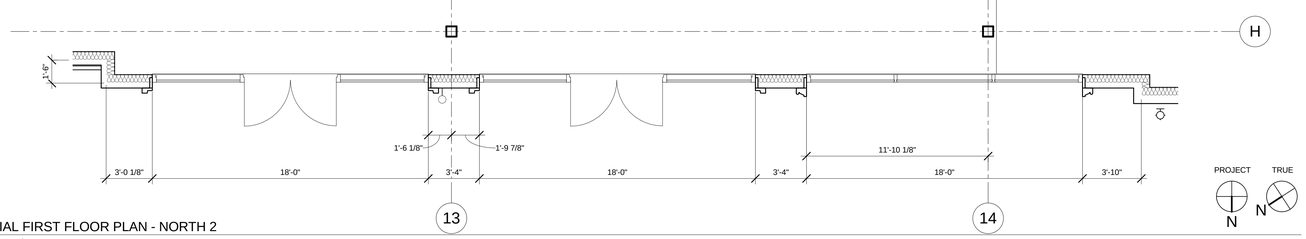

1 A3022 PARTIAL FIRST FLOOR PLAN - NORTH 2
Scale: 1/4" = 1'-0"

CLIENT

CENTERCAL PROPERTIES, LLC

COPYRIGHT:

Any reproduction or distribution for any purpose other than authorized by IBI Group is forbidden. Written dimensions shall have precedence over scaled dimensions. Contractors shall verify and be responsible for all dimensions and conditions on the job, and report any errors, omissions or conflicts in them the dimensions and conditions shown on the drawing. Shop drawings shall be submitted to IBI Group for approval before proceeding with fabrication.

COPYRIGHT © 2016 IBI GROUP

ISSUES

NO.	ISSUANCE	STATUS	DATE
1	PROGRESS SET		5/26/2016

SEAL

10759 REGISTERED ARCHITECT
CRAIG ROTHENBURGER
STATE OF WASHINGTON

SUB CONSULTANT

PRIME CONSULTANT

IBI
ibigroup.com

PROJECT
The Village at Totem Lake - Building B
Kirkland, Washington

PROJECT NO:	Building B
DRAWN BY:	Author
CHKD' BY:	Checker
SCALE:	1/4" = 1'-0"
DATE:	05/26/2016

SHEET TITLE
ENLARGED ELEV, PART. PLAN & WALL SECTIONS - NORTH 2

BLDG	SHEET NUMBER	ISSUE
B	A3022	

C:\Users\bjan.shoesh\Documents\ATW_Totem_BldgB_A_2016_bjan.shoesh.rvt

5/26/2016 6:09:57 PM

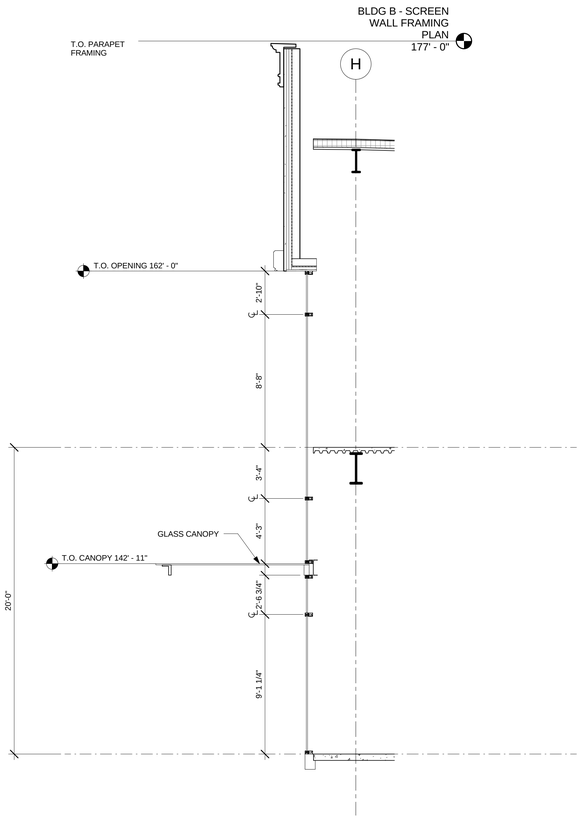

3A A3023 WALL SECTION AT STOREFRONT - NORTH 3
Scale: 1/4" = 1'-0"

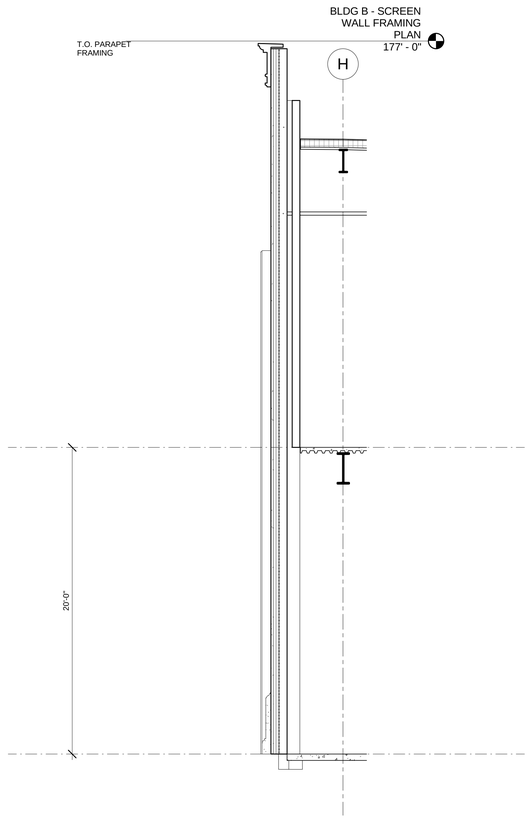

3B A3023 WALL SECTION AT ENDS - NORTH 3
Scale: 1/4" = 1'-0"

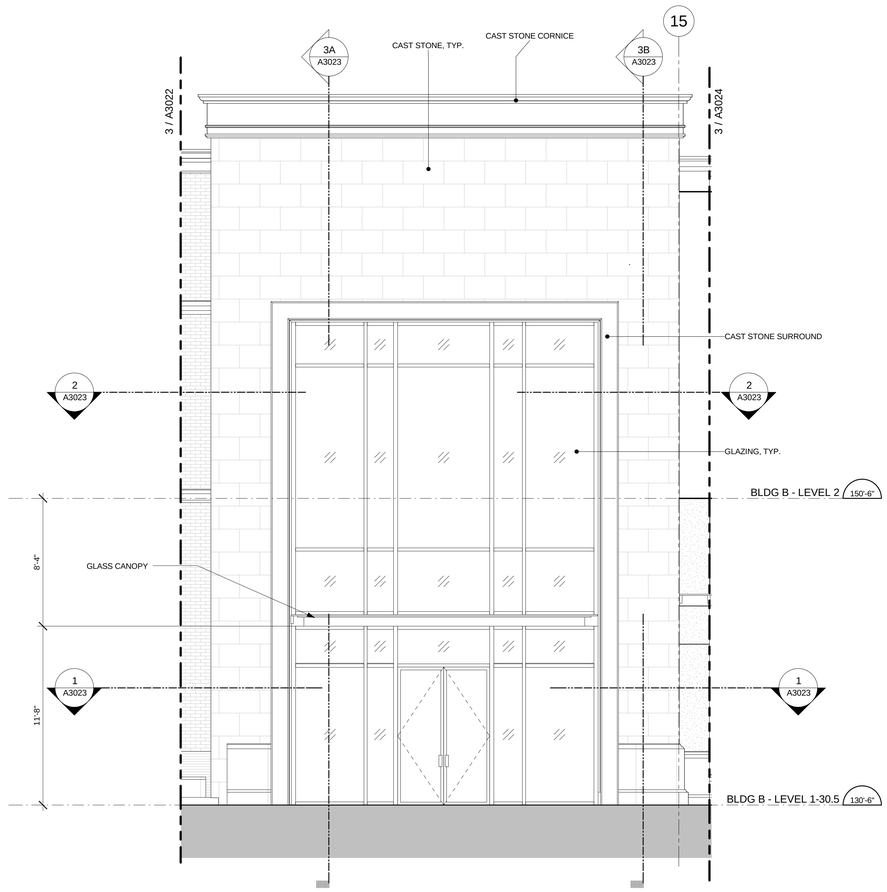

3 A3023 ENLARGED ELEVATION - NORTH 3
Scale: 1/4" = 1'-0"

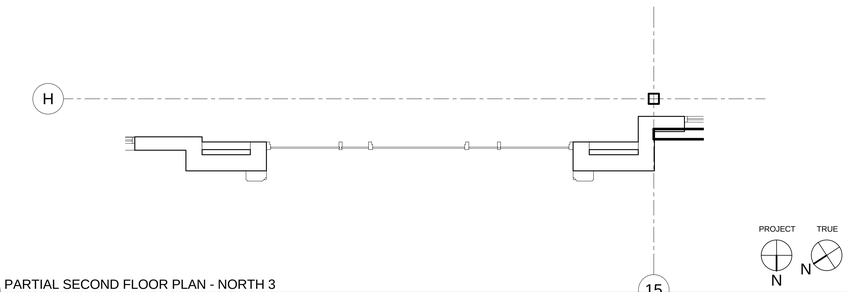

2 A3023 PARTIAL SECOND FLOOR PLAN - NORTH 3
Scale: 1/4" = 1'-0"

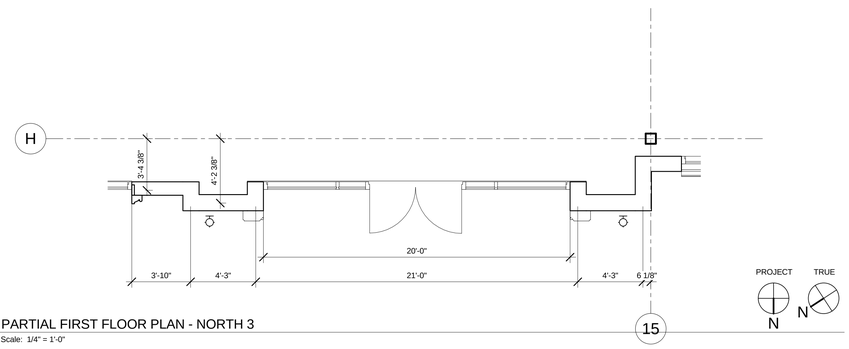

1 A3023 PARTIAL FIRST FLOOR PLAN - NORTH 3
Scale: 1/4" = 1'-0"

CLIENT

CENTERCAL PROPERTIES, LLC

COPYRIGHT:

Any reproduction or distribution for any purpose other than authorized by IBI Group is forbidden. Written dimensions shall have precedence over scaled dimensions. Contractors shall verify and be responsible for all dimensions and conditions on site. Any discrepancies shall be reported to the architect before the dimensions and conditions shown on the drawing. Shop drawings shall be submitted to IBI Group for approval before proceeding with fabrication.

COPYRIGHT © 2016 IBI GROUP

ISSUES

NO.	ISSUANCE	STATUS	DATE
1	PROGRESS SET		5/26/2016

SEAL

10759 REGISTERED ARCHITECT
CRAIG ROTHENBURGER
STATE OF WASHINGTON

SUB CONSULTANT

PRIME CONSULTANT

IBI ibigroup.com

PROJECT
The Village at Totem Lake - Building B
Kirkland, Washington

PROJECT NO:	Building B
DRAWN BY:	Author
CHKD' BY:	Checker
SCALE:	1/4" = 1'-0"
DATE:	05/26/2016

SHEET TITLE
ENLARGED ELEV, PART. PLAN & WALL SECTIONS - NORTH 3

BLDG	SHEET NUMBER	ISSUE
B	A3023	

C:\Users\bjan.shoeleh\Documents\ATW_Totem_Bldg\B_A_2016_bjan.shoeleh.rvt
5/26/2016 7:00:07 PM

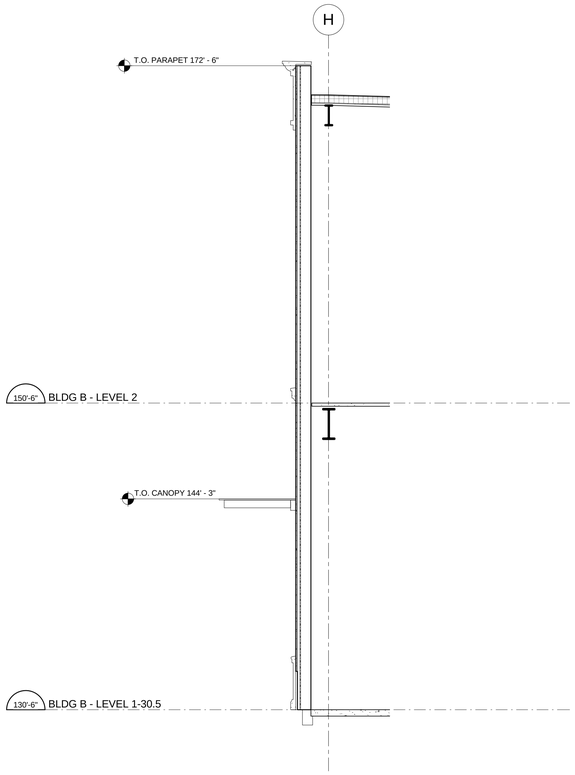

3A A3024 WALL SECTION - NORTH 4
Scale: 1/4" = 1'-0"

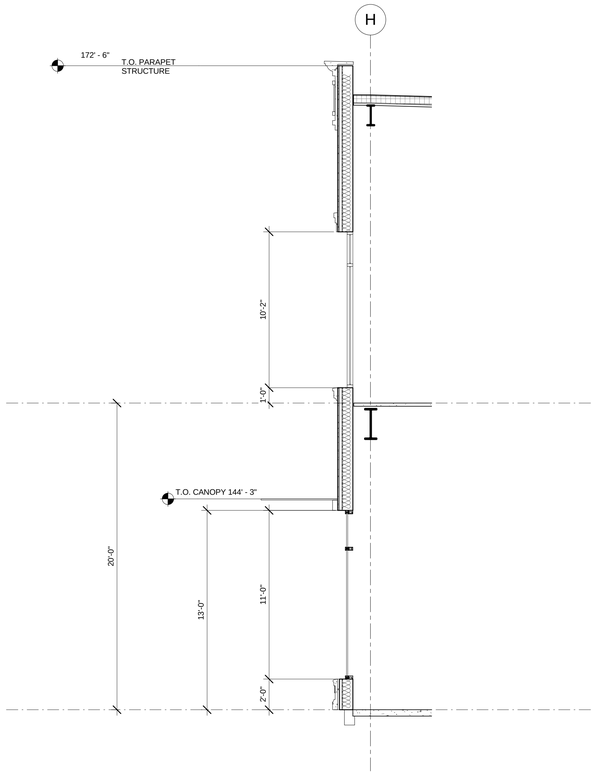

3B A3024 WALL SECTION AT WINDOWS- NORTH 4
Scale: 1/4" = 1'-0"

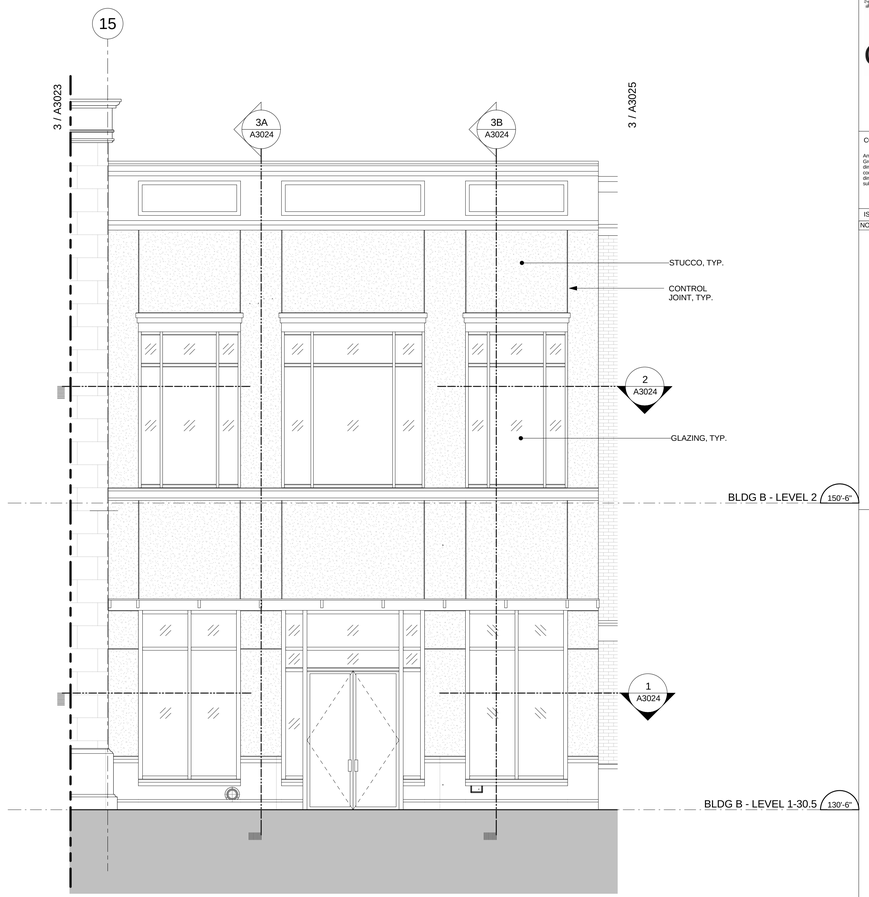

NOTE: ALL REVEAL DIMENSIONS ARE
TO THE TOP OF REVEAL U.N.O.

3 A3024 ENLARGED ELEVATION - NORTH 4
Scale: 1/4" = 1'-0"

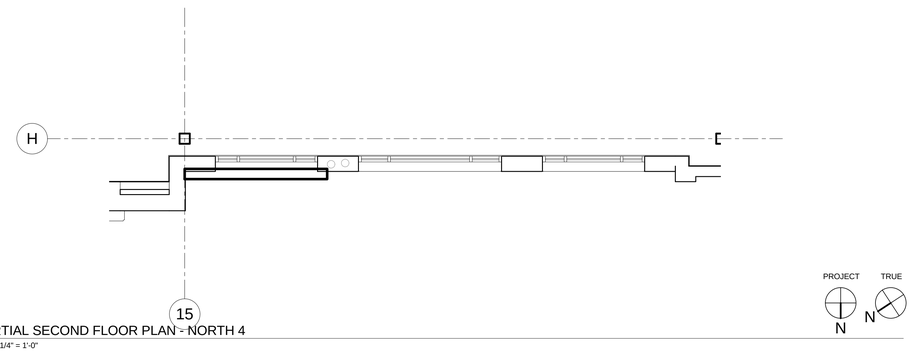

2 A3024 PARTIAL SECOND FLOOR PLAN - NORTH 4
Scale: 1/4" = 1'-0"

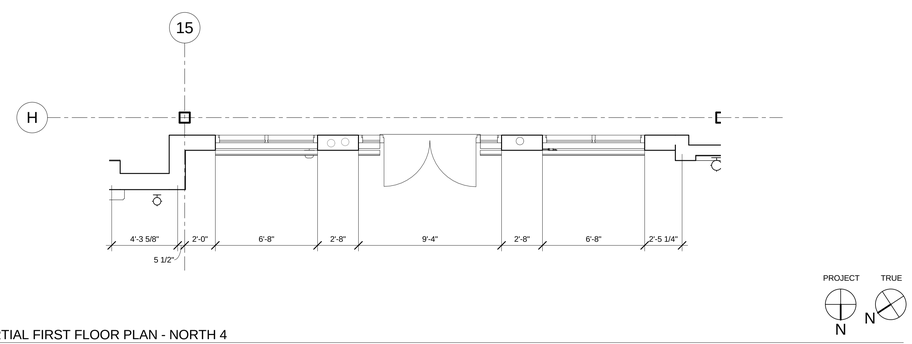

1 A3024 PARTIAL FIRST FLOOR PLAN - NORTH 4
Scale: 1/4" = 1'-0"

CLIENT

CENTERCAL PROPERTIES, LLC

COPYRIGHT:

Any reproduction or distribution for any purpose other than authorized by IBI Group is forbidden. Written dimensions shall have precedence over scaled dimensions. Contractors shall verify and be responsible for all dimensions and conditions on the job, and report any errors, omissions or conflicts from the dimensions and conditions shown on the drawing. Shop drawings shall be submitted to IBI Group for approval before proceeding with fabrication.

COPYRIGHT © 2016 IBI GROUP

ISSUES

NO.	ISSUANCE	STATUS	DATE

SEAL

10759 REGISTERED ARCHITECT
CRAIG ROTHENBURGER
STATE OF WASHINGTON

SUB CONSULTANT

PRIME CONSULTANT

IBI ibigroup.com

PROJECT
The Village at Totem Lake - Building B
Kirkland, Washington

PROJECT NO:	Building B
DRAWN BY:	Author
CHKD' BY:	Checker
SCALE:	1/4" = 1'-0"
DATE:	05/26/2016

SHEET TITLE
ENLARGED ELEV, PART. PLAN & WALL SECTIONS - NORTH 4

BLDG	SHEET NUMBER	ISSUE
B	A3024	

C:\Users\bjaya.shoieb\Documents\ATW_Totem_BldgB_A_2016_bjaya.shoieb.rvt

5/26/2016 7:00:10 PM

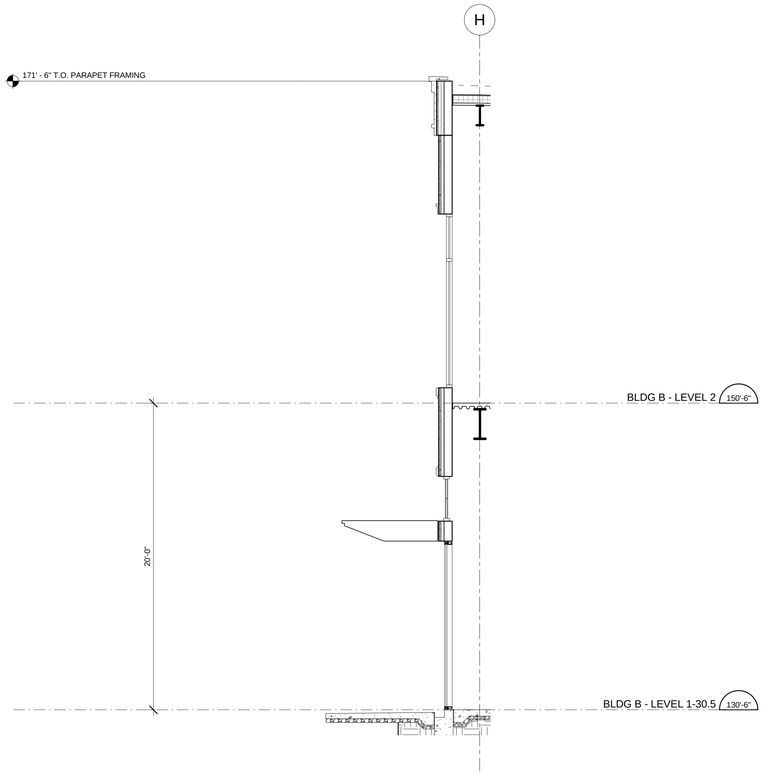

5 A3025 WALL SECTION AT WINDOWS- N. WEST A
Scale: 1/4" = 1'-0"

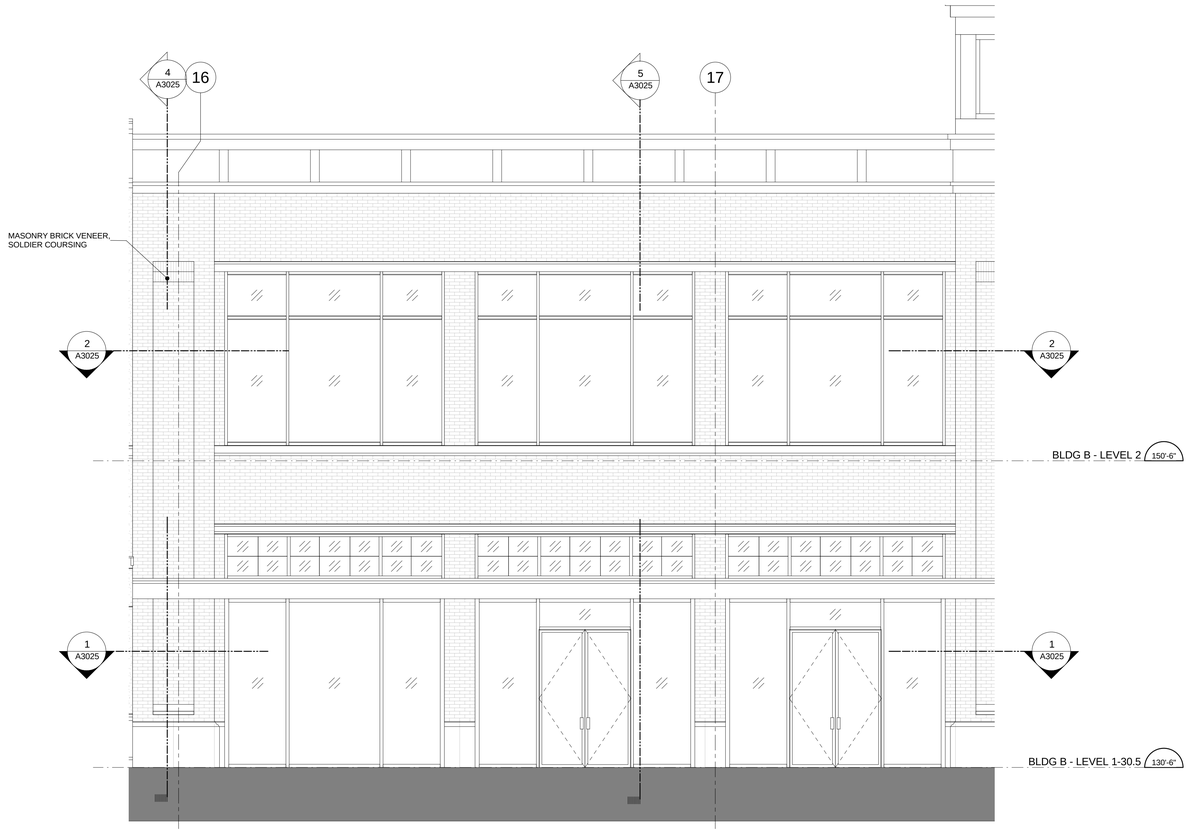

3 A3025 ENLARGED ELEVATION - N. WEST A
Scale: 1/4" = 1'-0"

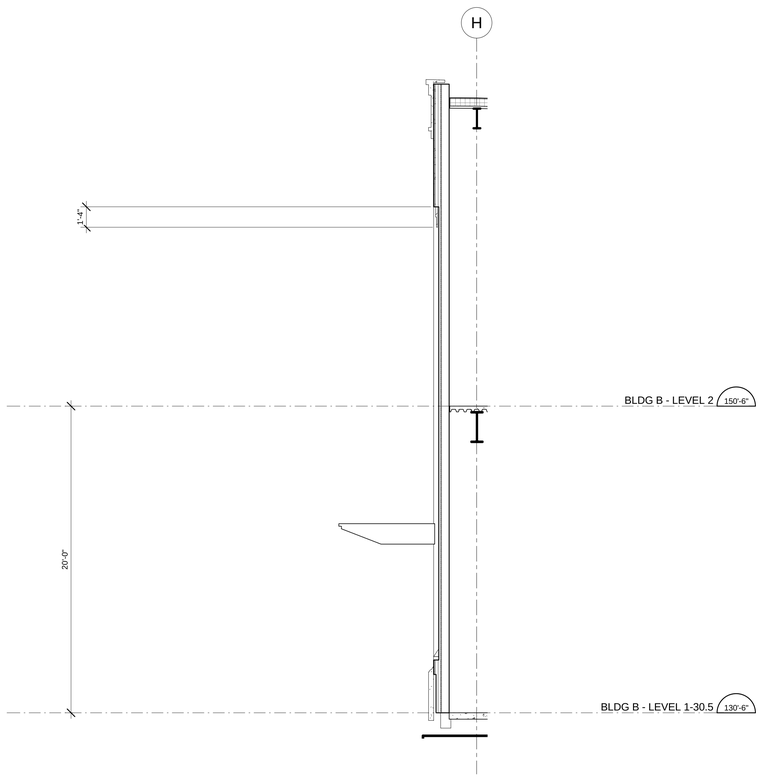

4 A3025 WALL SECTION - N. WEST A
Scale: 1/4" = 1'-0"

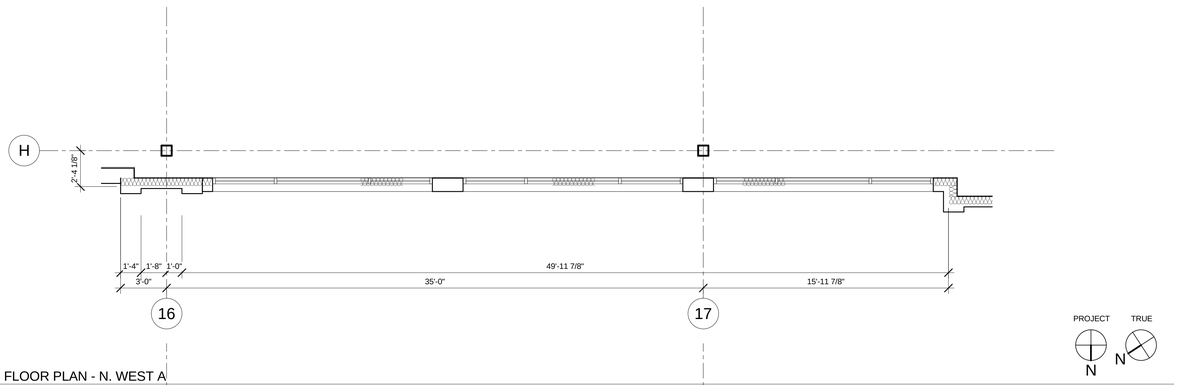

2 A3025 PARTIAL SECOND FLOOR PLAN - N. WEST A
Scale: 1/4" = 1'-0"

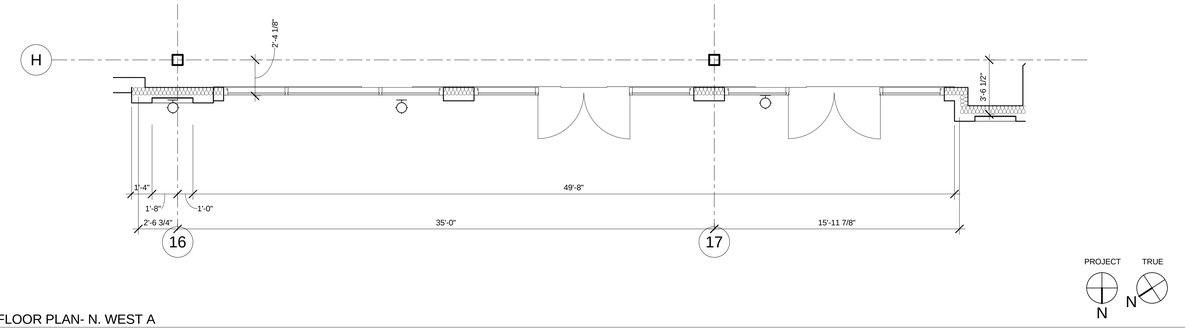

1 A3025 PARTIAL FIRST FLOOR PLAN- N. WEST A
Scale: 1/4" = 1'-0"

CLIENT

CENTERCAL PROPERTIES, LLC

COPYRIGHT:

Any reproduction or distribution for any purpose other than authorized by IBI Group is forbidden. Written dimensions shall have precedence over scaled dimensions. Contractors shall verify and be responsible for all dimensions and conditions on the job, and report any errors, omissions or conflicts in them the dimensions and conditions shown on the drawing. Shop drawings shall be submitted to IBI Group for approval before proceeding with fabrication.

COPYRIGHT © 2016 IBI GROUP

ISSUES

NO.	ISSUANCE	STATUS	DATE
1	PROGRESS SET		5/26/2016

SEAL

10759 REGISTERED ARCHITECT
CRAIG ROTHENBURGER
STATE OF WASHINGTON

SUB CONSULTANT

PRIME CONSULTANT

IBI
ibigroup.com

PROJECT
The Village at Totem Lake - Building B
Kirkland, Washington

PROJECT NO:	Building B
DRAWN BY:	Author
CHKD' BY:	Checker
SCALE:	1/4" = 1'-0"
DATE:	05/26/2016

SHEET TITLE
ENLARGED ELEV, PART. PLAN & WALL SECTIONS - N. WEST A

BLDG	SHEET NUMBER	ISSUE
B	A3025	

C:\Users\bjan.shoieh\Documents\ATW_Totem_BldgB_A_2015_bjan.shoieh.rvt

5/26/2016 7:00:17 PM

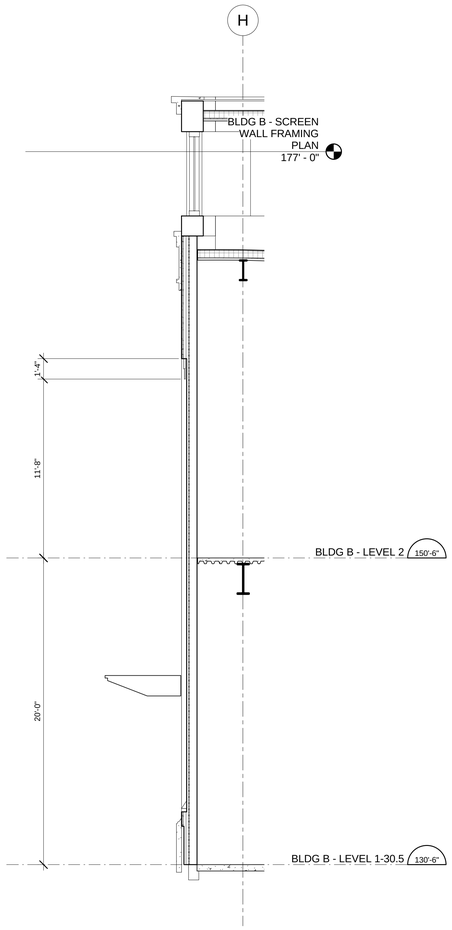

5 A3026 WALL SECTION - N. WEST B
Scale: 1/4" = 1'-0"

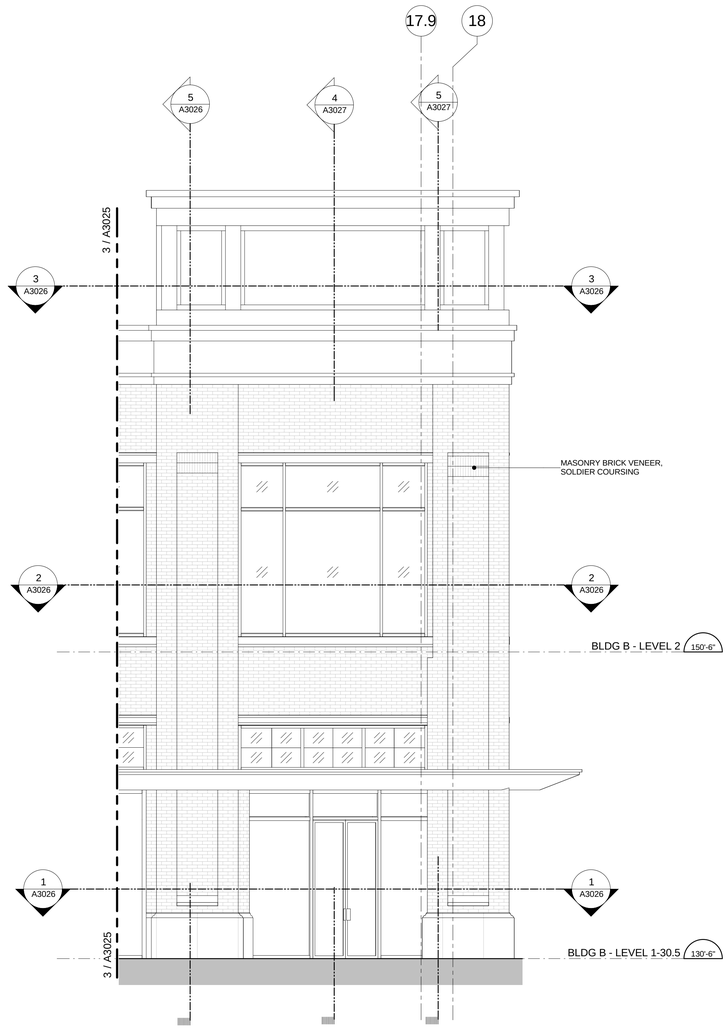

4 A3026 ENLARGED ELEVATION - N. WEST B
Scale: 1/4" = 1'-0"

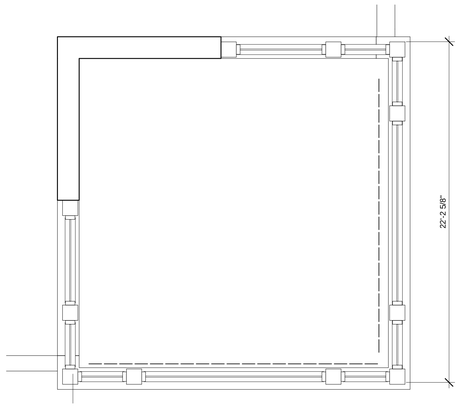

PROJECT N
TRUE N

3 A3026 PARTIAL ROOF PLAN - N. WEST B
Scale: 1/4" = 1'-0"

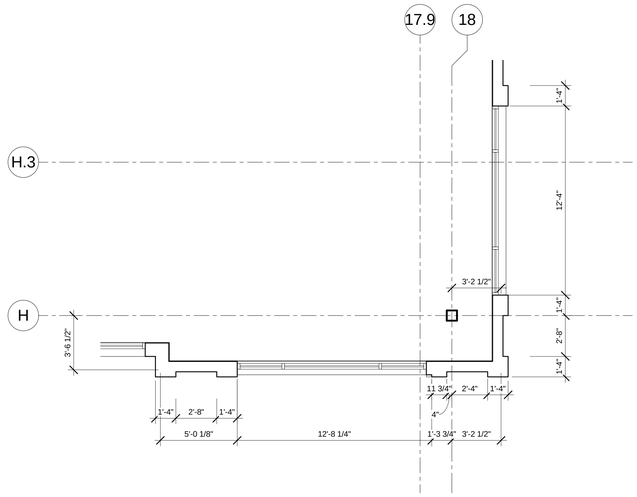

PROJECT N
TRUE N

2 A3026 PARTIAL SECOND FLOOR PLAN - N. WEST B
Scale: 1/4" = 1'-0"

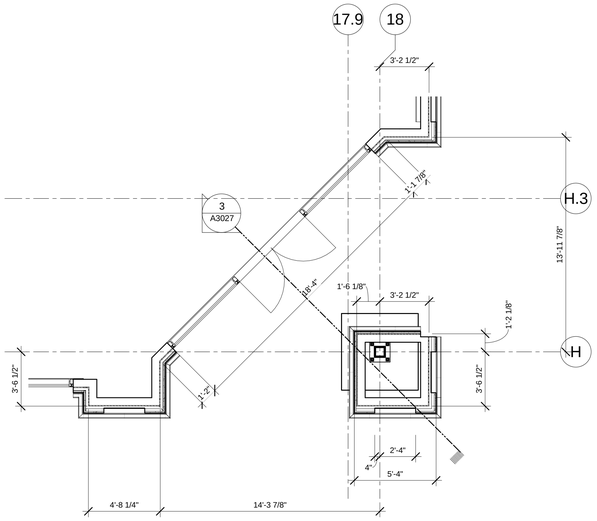

PROJECT N
TRUE N

1 A3026 PARTIAL FIRST FLOOR PLAN - N. WEST B
Scale: 1/4" = 1'-0"

CLIENT

CENTERCAL PROPERTIES, LLC

COPYRIGHT:

Any reproduction or distribution for any purpose other than authorized by IBI Group is forbidden. Written dimensions shall have precedence over scaled dimensions. Contractors shall verify and be responsible for all dimensions and conditions on site. IBI Group must be notified of any variations from the dimensions and conditions shown on the drawing. Shop drawings shall be submitted to IBI Group for approval before proceeding with fabrication.

COPYRIGHT © 2016 IBI GROUP

ISSUES

NO.	ISSUANCE	STATUS	DATE

SEAL

10759 REGISTERED ARCHITECT
CRAIG ROTHENBURGER
STATE OF WASHINGTON

SUB CONSULTANT

PRIME CONSULTANT

IBI ibigroup.com

PROJECT
The Village at Totem Lake - Building B
Kirkland, Washington

PROJECT NO:	Building B
DRAWN BY:	Author
CHKD' BY:	Checker
SCALE:	1/4" = 1'-0"
DATE:	05/26/2016

SHEET TITLE
ENLARGED ELEV, PART. PLAN & WALL SECTIONS - N. WEST B

BLDG	SHEET NUMBER	ISSUE
B	A3026	

C:\Users\bjan.shoieh\Documents\ATW_Totem_Bldg B_A_2016_bjan.shoieh.rvt

5/26/2016 7:00:27 PM

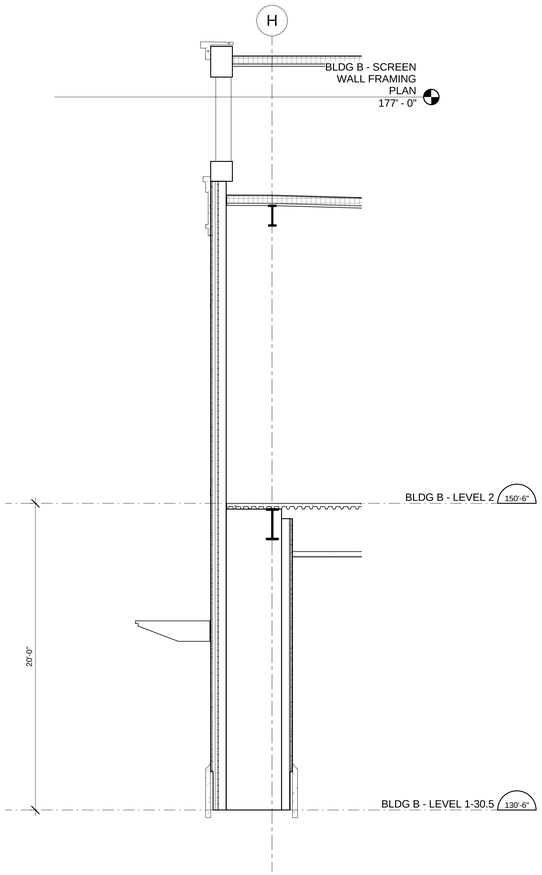

5 A3027 WALL SECTION 1 - N. WEST B
Scale: 1/4" = 1'-0"

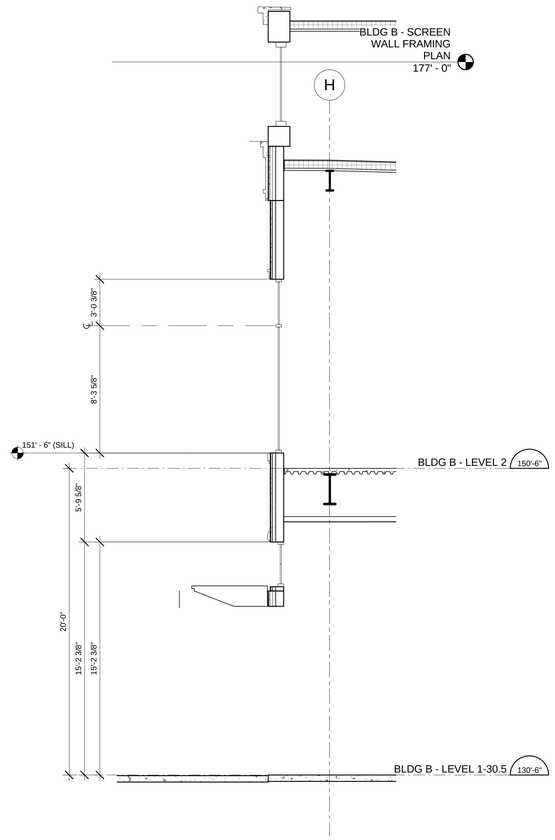

4 A3027 WALL SECTION 2 - N. WEST B
Scale: 1/4" = 1'-0"

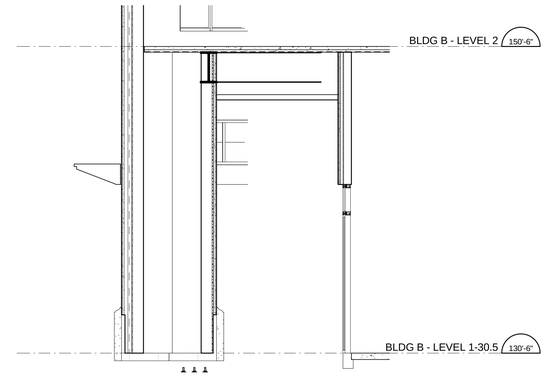

3 A3027 WALL SECTION - ENTRY - N. WEST B
Scale: 1/4" = 1'-0"

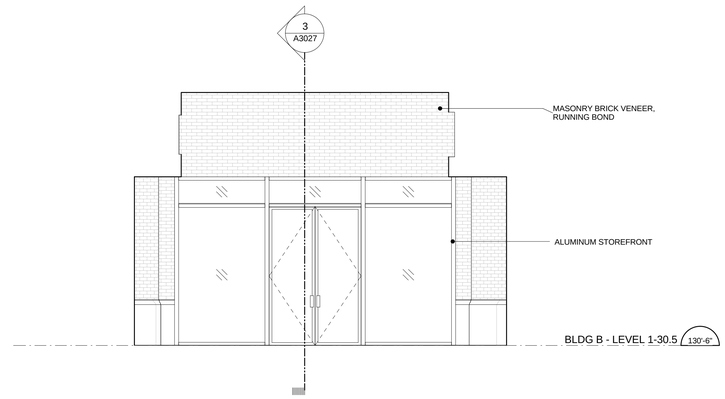

2 A3027 ENLARGED ELEVATION - N. WEST B
Scale: 1/4" = 1'-0"

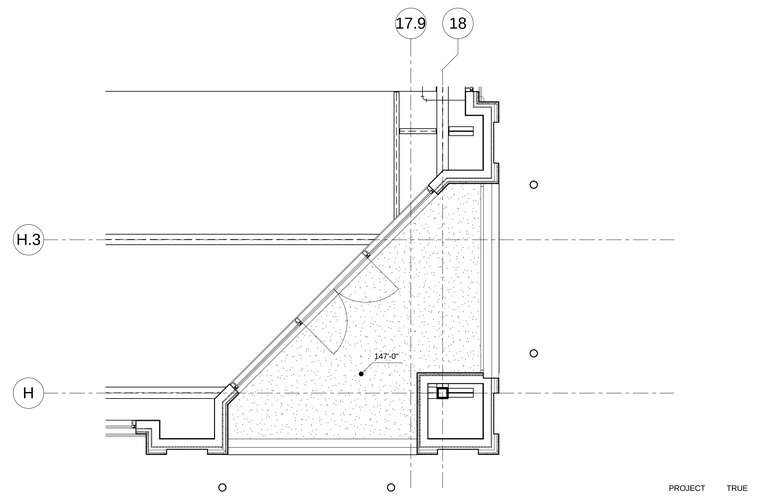

1 A3027 ENLARGED RCP - N. WEST B
Scale: 1/4" = 1'-0"

PROJECT N
TRUE N

CLIENT

CENTERCAL PROPERTIES, LLC

COPYRIGHT:

Any reproduction or distribution for any purpose other than authorized by IBI Group is forbidden. Written dimensions shall have precedence over scaled dimensions. Contractors shall verify and be responsible for all dimensions and conditions on the job, and report any errors, omissions or conflicts to IBI Group from the dimensions and conditions shown on the drawing. Shop drawings shall be submitted to IBI Group for approval before proceeding with fabrication.

COPYRIGHT © 2016 IBI GROUP

ISSUES

NO.	ISSUANCE	STATUS	DATE

SEAL

10759 REGISTERED ARCHITECT
CRAIG ROTHENBURGER
STATE OF WASHINGTON

SUB CONSULTANT

PRIME CONSULTANT

IBI
ibigroup.com

PROJECT
The Village at Totem Lake - Building B
Kirkland, Washington

PROJECT NO:	Building B
DRAWN BY:	Author
CHKD' BY:	Checker
SCALE:	1/4" = 1'-0"
DATE:	05/26/2016

SHEET TITLE
ENLARGED ELEV, PART. PLAN & WALL SECTIONS - N. WEST B

BLDG	SHEET NUMBER	ISSUE
B	A3027	

C:\Users\bjaya.shoieb\Documents\ATW_Totem_Bldg B_A_2016_bjaya.shoieb.rvt

5/26/2016 7:00:41 PM

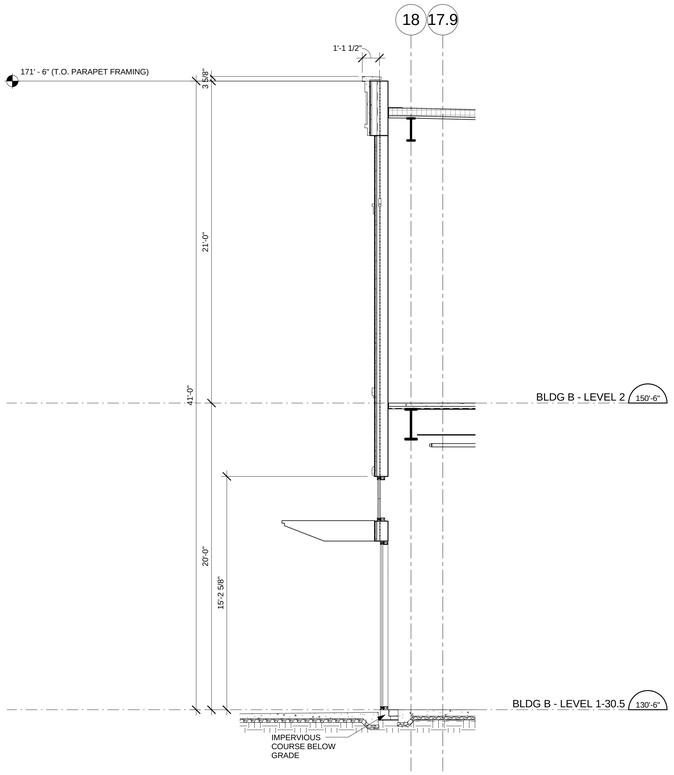

5 A3030 WALL SECTION - N. WEST C
Scale: 1/4" = 1'-0"

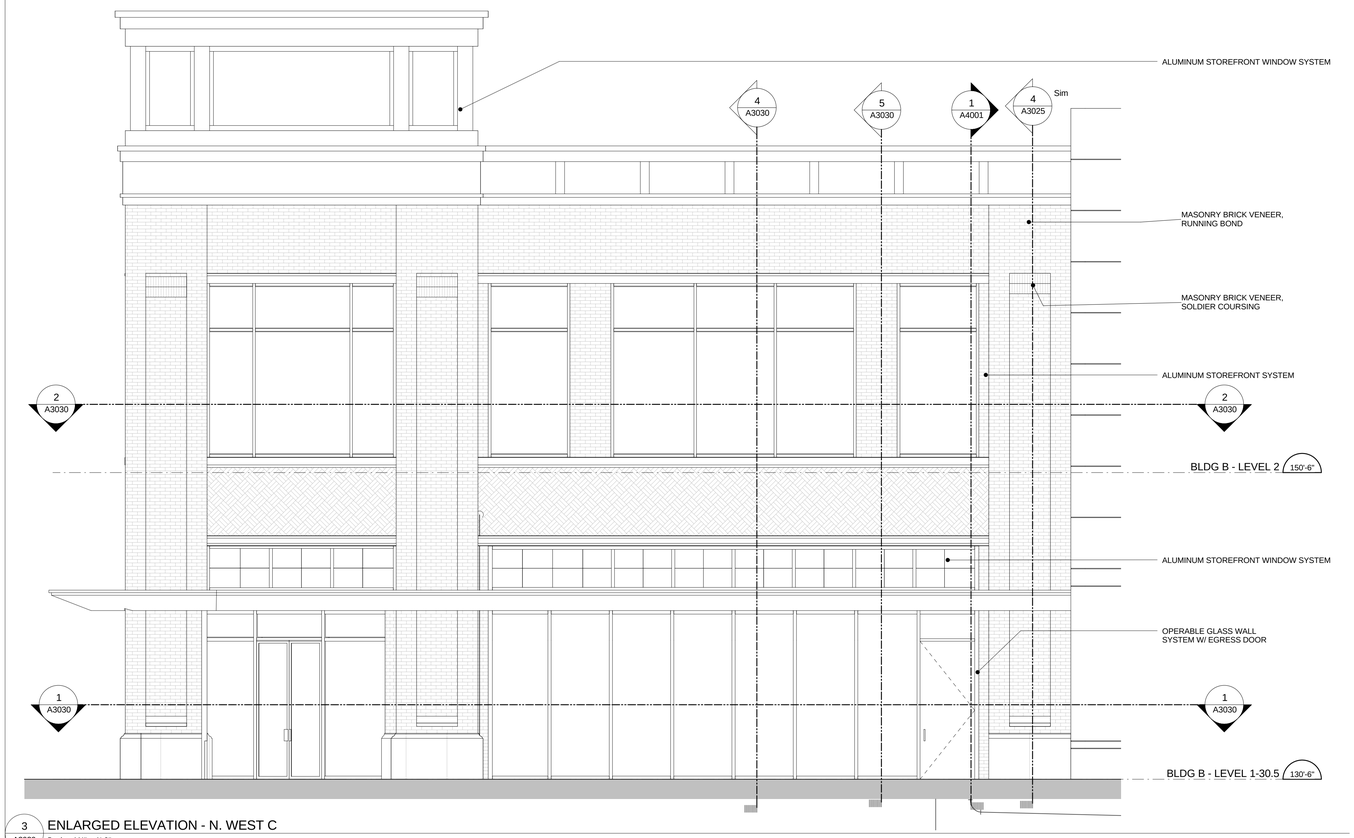

3 A3030 ENLARGED ELEVATION - N. WEST C
Scale: 1/4" = 1'-0"

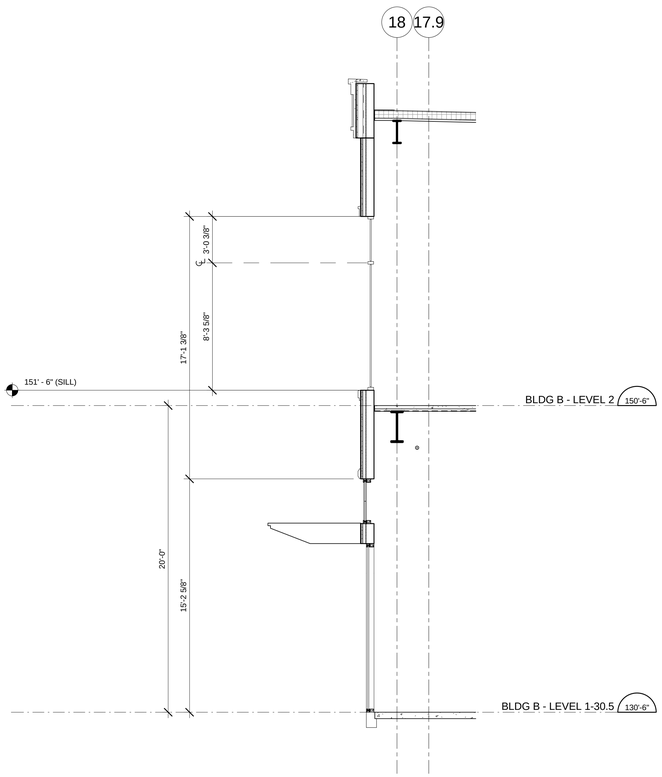

4 A3030 WALL SECTION AT WINDOWS - N. WEST C
Scale: 1/4" = 1'-0"

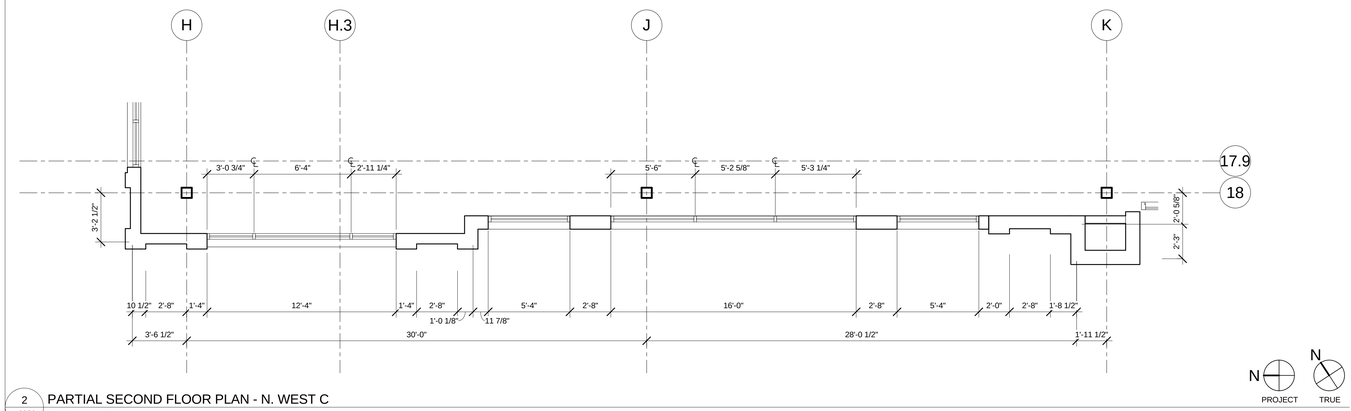

2 A3030 PARTIAL SECOND FLOOR PLAN - N. WEST C
Scale: 1/4" = 1'-0"

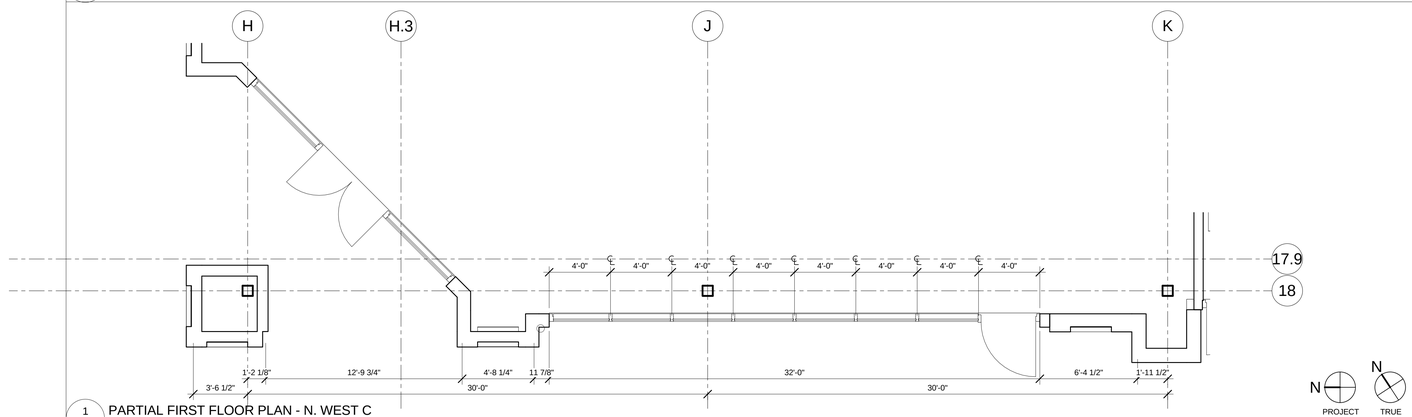

1 A3030 PARTIAL FIRST FLOOR PLAN - N. WEST C
Scale: 1/4" = 1'-0"

CLIENT

CENTERCAL PROPERTIES, LLC

COPYRIGHT:

Any reproduction or distribution for any purpose other than authorized by IBI Group is forbidden. Written dimensions shall have precedence over scaled dimensions. Contractors shall verify and be responsible for all dimensions and conditions on the job, and report any errors, omissions or conflicts in them the dimensions and conditions shown on the drawing. Shop drawings shall be submitted to IBI Group for approval before proceeding with fabrication.

COPYRIGHT © 2016 IBI GROUP

ISSUES

NO.	ISSUANCE	STATUS	DATE

SEAL

10759 REGISTERED ARCHITECT
CRAIG ROTHENBURGER
STATE OF WASHINGTON

SUB CONSULTANT

PRIME CONSULTANT

IBI
ibigroup.com

PROJECT
The Village at Totem Lake - Building B
Kirkland, Washington

PROJECT NO:	Building B
DRAWN BY:	Author
CHKD' BY:	Checker
SCALE:	1/4" = 1'-0"
DATE:	05/26/2016

SHEET TITLE
ENLARGED ELEV, PART. PLAN & WALL SECTIONS - N. WEST C

BLDG	SHEET NUMBER	ISSUE
B	A3030	

C:\Users\bjan.shoieh\Documents\ATW_Totem_BldgB_A_2015_bjan.shoieh.rvt

5/26/2016 7:00:45 PM

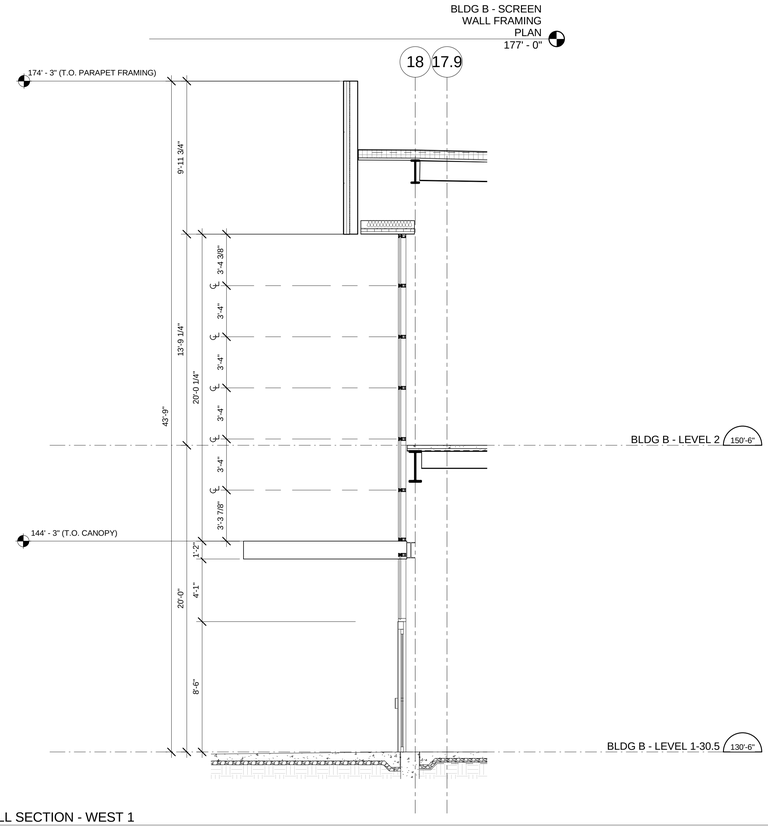

5 A3031 WALL SECTION - WEST 1
Scale: 1/4" = 1'-0"

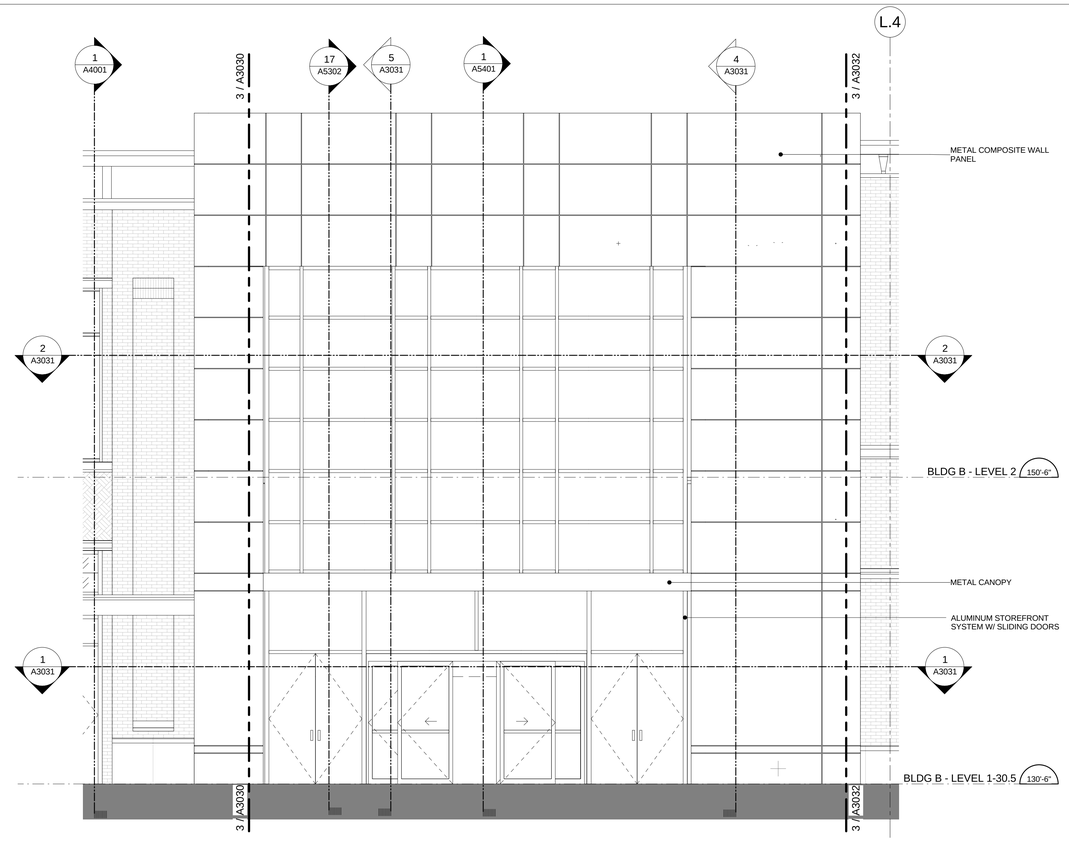

3 A3031 ENLARGED ELEVATION - WEST 1
Scale: 1/4" = 1'-0"

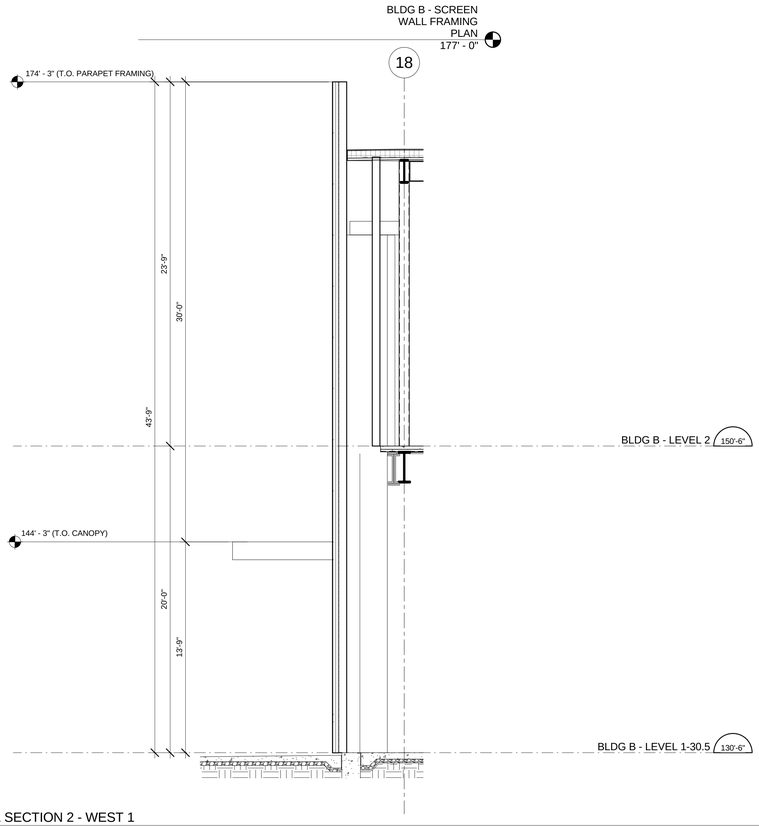

4 A3031 WALL SECTION 2 - WEST 1
Scale: 1/4" = 1'-0"

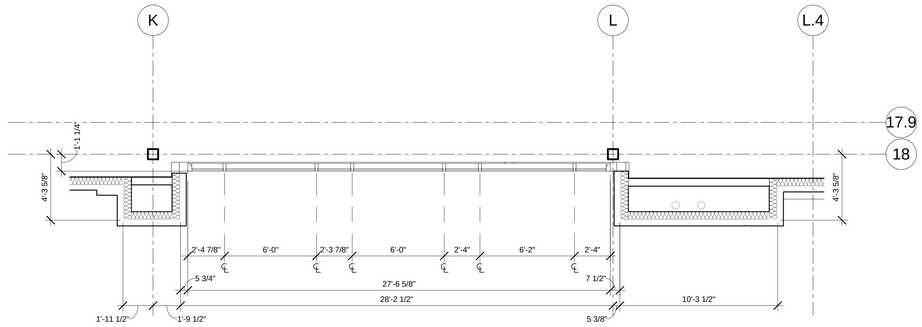

N PROJECT
N TRUE

2 A3031 PARTIAL SECOND FLOOR PLAN - WEST 1
Scale: 1/4" = 1'-0"

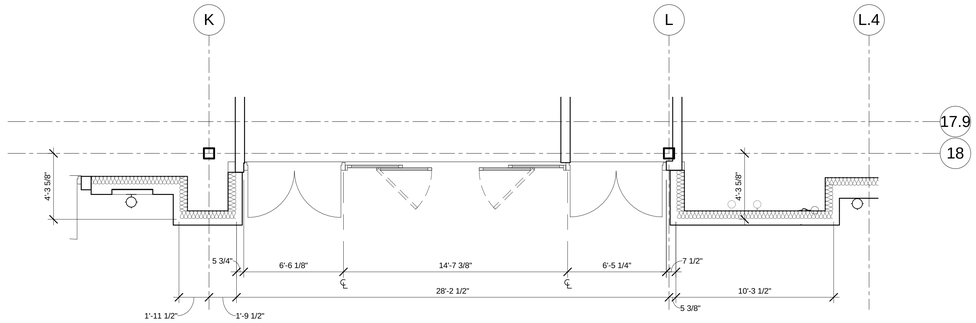

N PROJECT
N TRUE

1 A3031 PARTIAL FIRST FLOOR PLAN - WEST 1
Scale: 1/4" = 1'-0"

CLIENT

CENTERCAL PROPERTIES, LLC

COPYRIGHT:

Any reproduction or distribution for any purpose other than authorized by IBI Group is forbidden. Written dimensions shall have precedence over scaled dimensions. Contractors shall verify and be responsible for all dimensions and conditions on the job, and report any errors and omissions to the architect then the dimensions and conditions shown on the drawing. Shop drawings shall be submitted to IBI Group for approval before proceeding with fabrication.

COPYRIGHT © 2016 IBI GROUP

ISSUES

NO.	ISSUANCE	STATUS	DATE
1	PROGRESS SET		5/26/2016

SEAL

10759 REGISTERED ARCHITECT
CRAIG ROTHENBURGER
STATE OF WASHINGTON

SUB CONSULTANT

PRIME CONSULTANT

IBI
ibigroup.com

PROJECT

The Village at Totem Lake - Building B
Kirkland, Washington

PROJECT NO:	Building B
DRAWN BY:	Author
CHKD' BY:	Checker
SCALE:	1/4" = 1'-0"
DATE:	05/26/2016

SHEET TITLE

ENLARGED ELEV, PART. PLAN & WALL SECTIONS - WEST 1

BLDG	SHEET NUMBER	ISSUE
B	A3031	

C:\Users\bjan.shoieh\Documents\ATW_Totem_BldgB_A_2016_bjan.shoieh.rvt

5/26/2016 7:00:49 PM

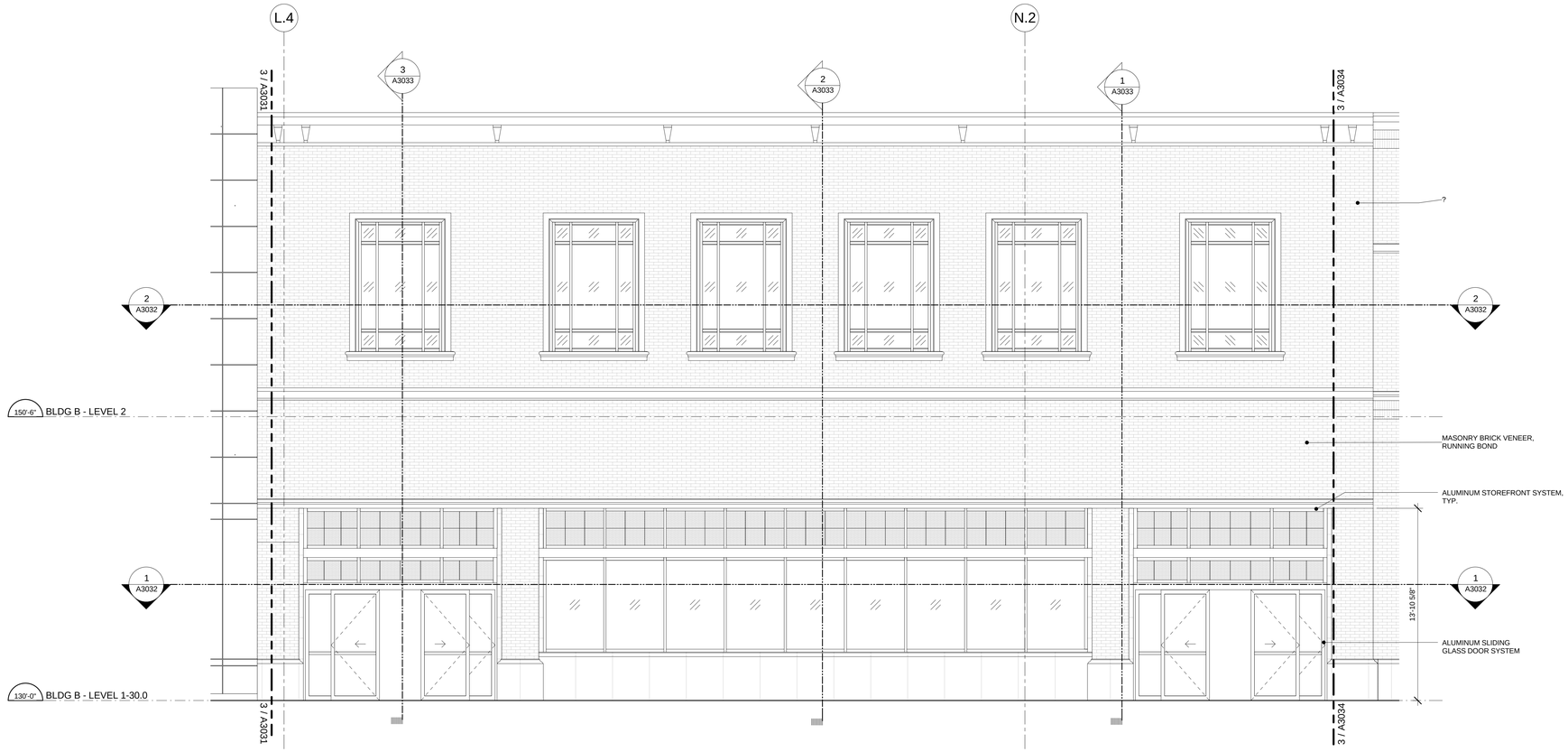

3 A3032 ENLARGED ELEVATION - WEST 2

Scale: 1/4" = 1'-0"

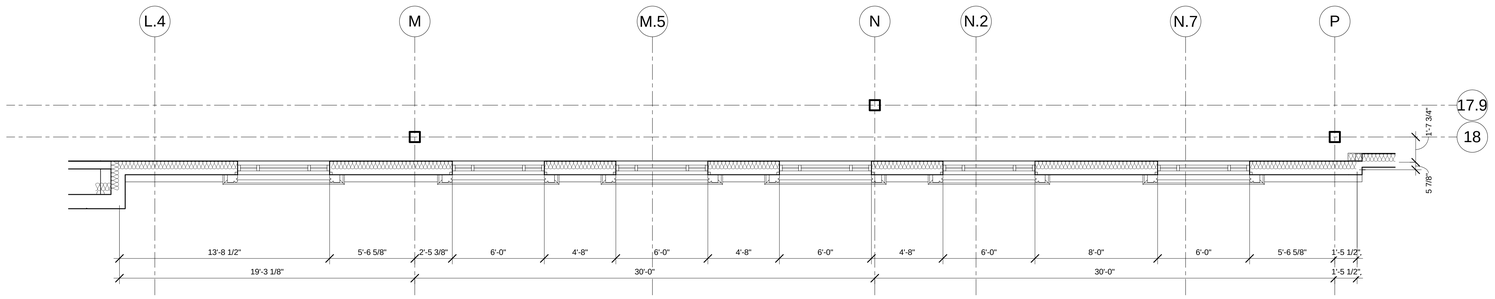

2 A3032 PARTIAL SECOND FLOOR PLAN - WEST 2

Scale: 1/4" = 1'-0"

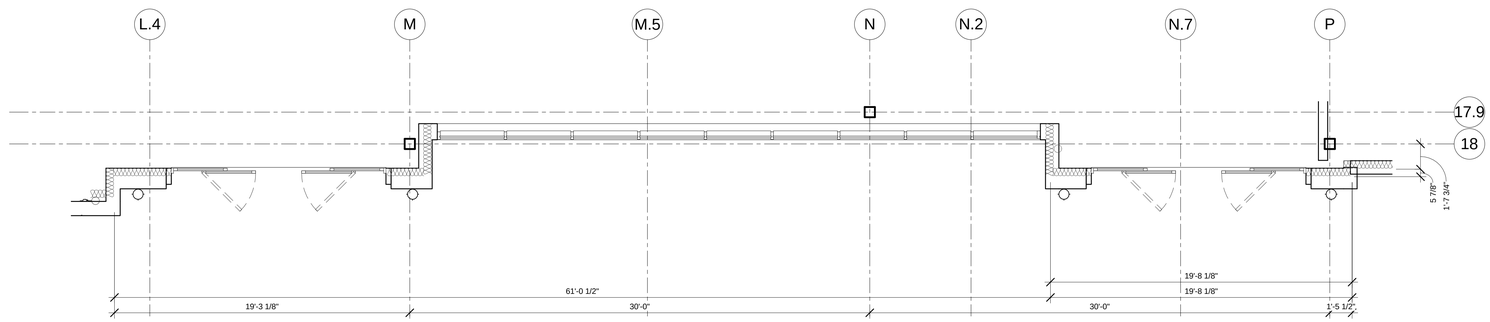

1 A3032 PARTIAL FIRST FLOOR PLAN - WEST 2

Scale: 1/4" = 1'-0"

C:\Users\bjan.shoieh\Documents\ATW_Totem_BldgB_A_2016_bjan.shoieh.rvt

5/26/2016 7:01:01 PM

CLIENT

CENTERCAL PROPERTIES, LLC

COPYRIGHT:

Any reproduction or distribution for any purpose other than authorized by IBI Group is forbidden. Written dimensions shall have precedence over scaled dimensions. Contractors shall verify and be responsible for all dimensions and conditions on the job, and report any errors, omissions or conflicts in them the dimensions and conditions shown on the drawing. Shop drawings shall be submitted to IBI Group for approval before proceeding with fabrication.

COPYRIGHT © 2016 IBI GROUP

ISSUES

NO.	ISSUANCE	STATUS	DATE
1	PROGRESS SET		5/26/2016

SEAL

10759 REGISTERED ARCHITECT

CRAIG ROTHENBURGER
STATE OF WASHINGTON

SUB CONSULTANT

PRIME CONSULTANT

IBI
ibigroup.com

PROJECT

The Village at Totem Lake - Building B
Kirkland, Washington

PROJECT NO:	Building B
DRAWN BY:	Author
CHKD' BY:	Checker
SCALE:	1/4" = 1'-0"
DATE:	05/26/2016

SHEET TITLE

ENLARGED ELEV, PART. PLAN - WEST 2

BLDG	SHEET NUMBER	ISSUE
B	A3032	

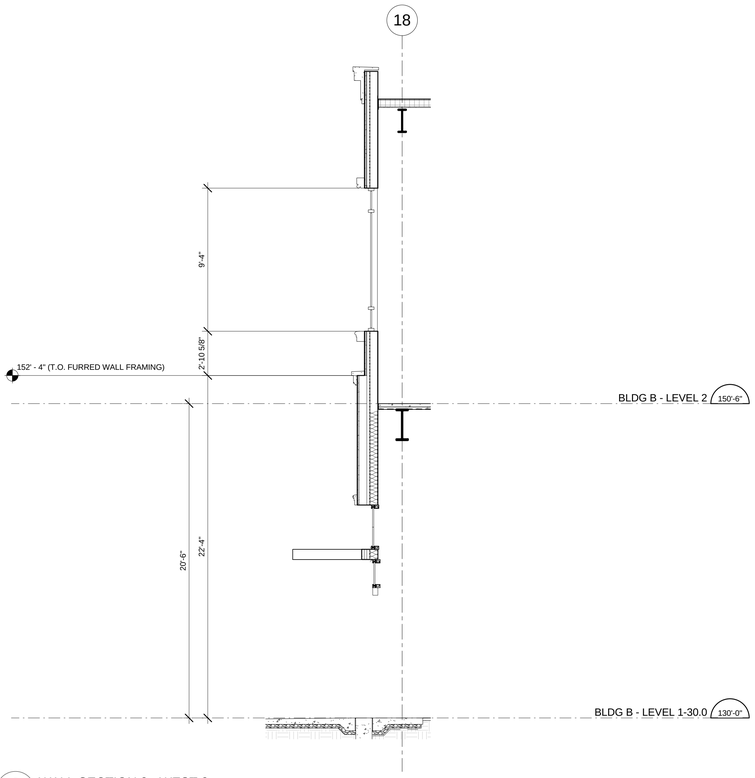

3 A3033 WALL SECTION 3 - WEST 2
Scale: 1/4" = 1'-0"

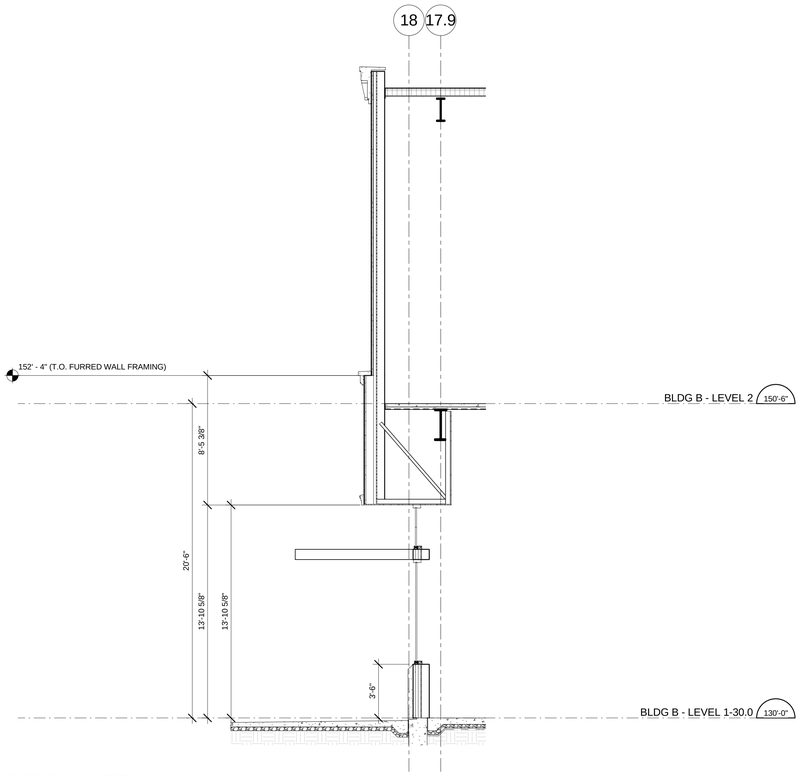

2 A3033 WALL SECTION 2 - WEST 2
Scale: 1/4" = 1'-0"

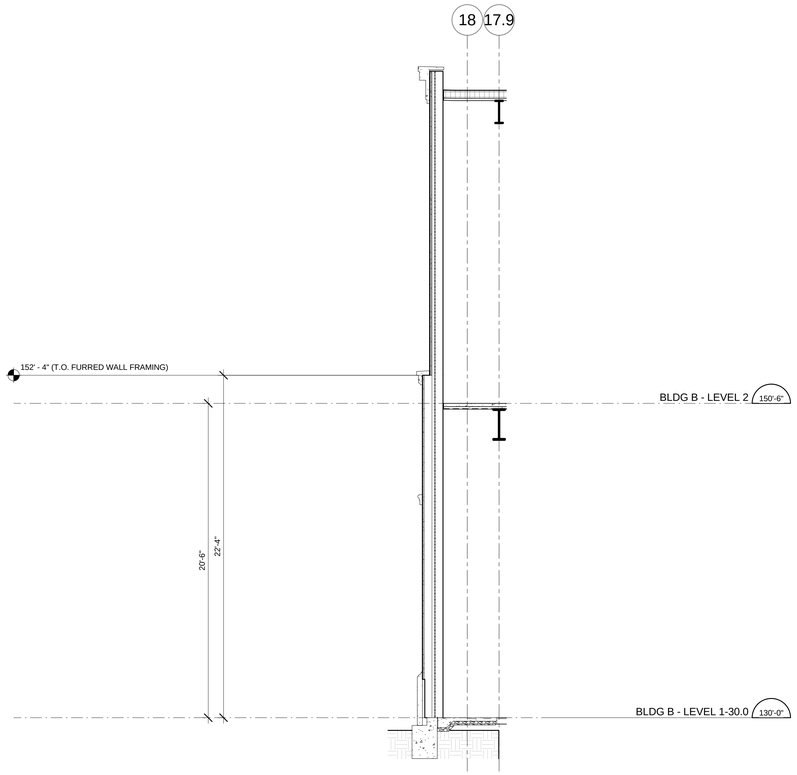

1 A3033 WALL SECTION 1 - WEST 2
Scale: 1/4" = 1'-0"

CLIENT

CENTERCAL PROPERTIES, LLC

COPYRIGHT:

Any reproduction or distribution for any purpose other than authorized by IBI Group is forbidden. Written dimensions shall have precedence over scaled dimensions. Contractors shall verify and be responsible for all dimensions and conditions on the job, and report any errors, omissions or conflicts from the dimensions and conditions shown on the drawing. Shop drawings shall be submitted to IBI Group for approval before proceeding with fabrication.

COPYRIGHT © 2016 IBI GROUP

ISSUES

NO.	ISSUANCE	STATUS	DATE

SEAL

10759 REGISTERED ARCHITECT
CRAIG ROTHENBURGER
STATE OF WASHINGTON

SUB CONSULTANT

PRIME CONSULTANT

IBI
ibigroup.com

PROJECT
The Village at Totem Lake - Building B
Kirkland, Washington

PROJECT NO:	Building B
DRAWN BY:	Author
CHKD' BY:	Checker
SCALE:	1/4" = 1'-0"
DATE:	05/26/2016

SHEET TITLE
ENLARGED WALL SECTIONS - WEST 2

BLDG	SHEET NUMBER	ISSUE
B	A3033	

C:\Users\bjan.shoesh\Documents\ATW_Totem_BldgB_A_2016_bjan.shoesh.rvt

5/26/2016 7:01:02 PM

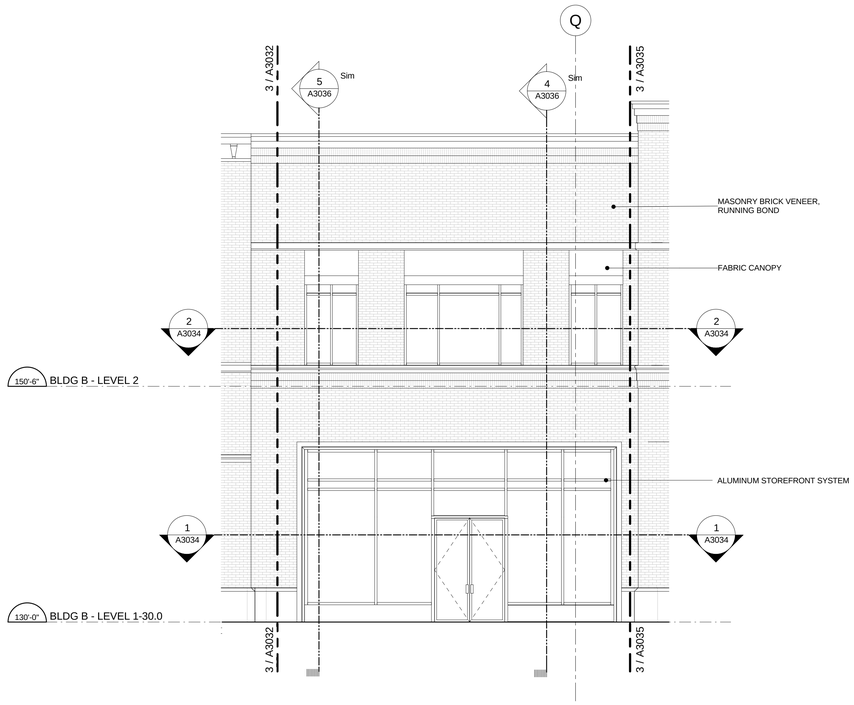

3 A3034 ENLARGED ELEVATION - WEST 3A

Scale: 3/16" = 1'-0"

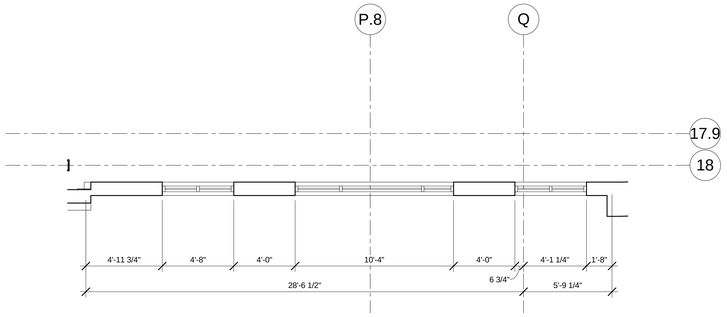

N PROJECT N TRUE

2 A3034 PARTIAL SECOND FLOOR PLAN - WEST 3A

Scale: 1/4" = 1'-0"

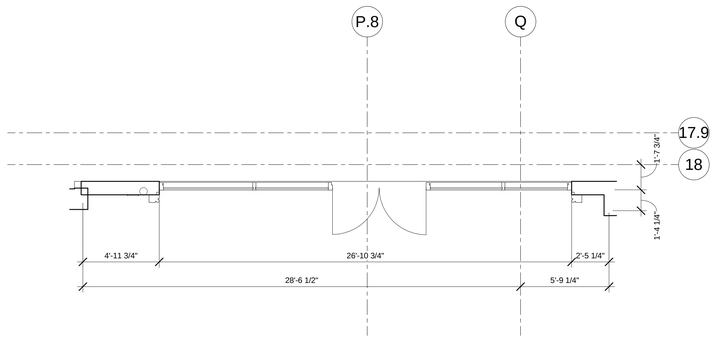

N PROJECT N TRUE

1 A3034 PARTIAL FIRST FLOOR PLAN - WEST 3A

Scale: 1/4" = 1'-0"

CLIENT

CENTERCAL PROPERTIES, LLC

COPYRIGHT:

Any reproduction or distribution for any purpose other than authorized by IBI Group is forbidden. Written dimensions shall have precedence over scaled dimensions. Contractors shall verify and be responsible for all dimensions and conditions on the job, and report any errors or omissions to the architect then the dimensions and conditions shown on the drawing. Shop drawings shall be submitted to IBI Group for approval before proceeding with fabrication.

COPYRIGHT © 2016 IBI GROUP

ISSUES

NO.	ISSUANCE	STATUS	DATE

SEAL

10759 REGISTERED ARCHITECT

CRAIG ROTHENBURGER
STATE OF WASHINGTON

SUB CONSULTANT

PRIME CONSULTANT

IBI
ibigroup.com

PROJECT

The Village at Totem Lake - Building B
Kirkland, Washington

PROJECT NO:	Building B
DRAWN BY:	Author
CHKD' BY:	Checker
SCALE:	As indicated
DATE:	05/26/2016

SHEET TITLE

ENLARGED ELEV, PART. PLAN - WEST 3A

BLDG	SHEET NUMBER	ISSUE
B	A3034	

C:\Users\bjan.shoieh\Documents\ATW_Totem_BldgB_A_2016_bjan.shoieh.rvt

5/26/2016 7:01:04 PM

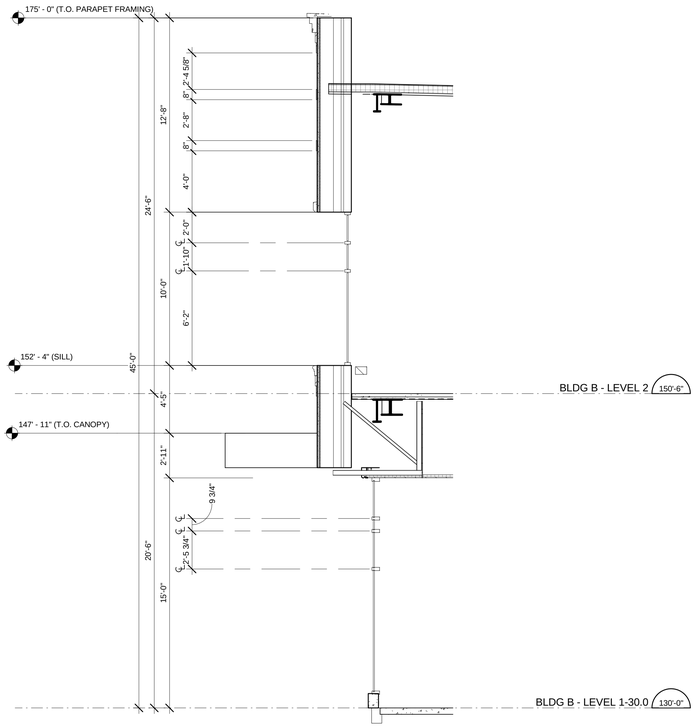

5 A3035 WALL SECTION 2 - WEST 3B
Scale: 1/4" = 1'-0"

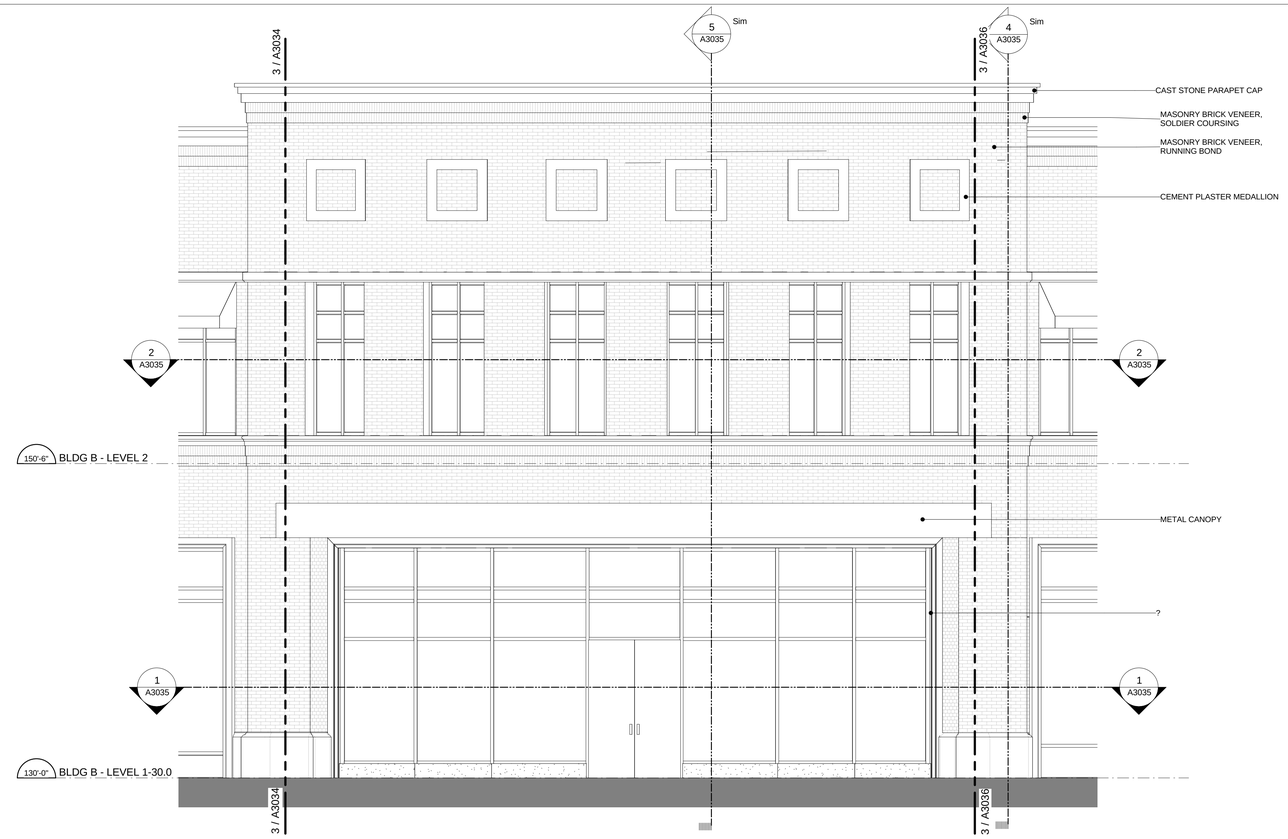

3 A3035 ENLARGED ELEVATION - WEST 3B
Scale: 1/4" = 1'-0"

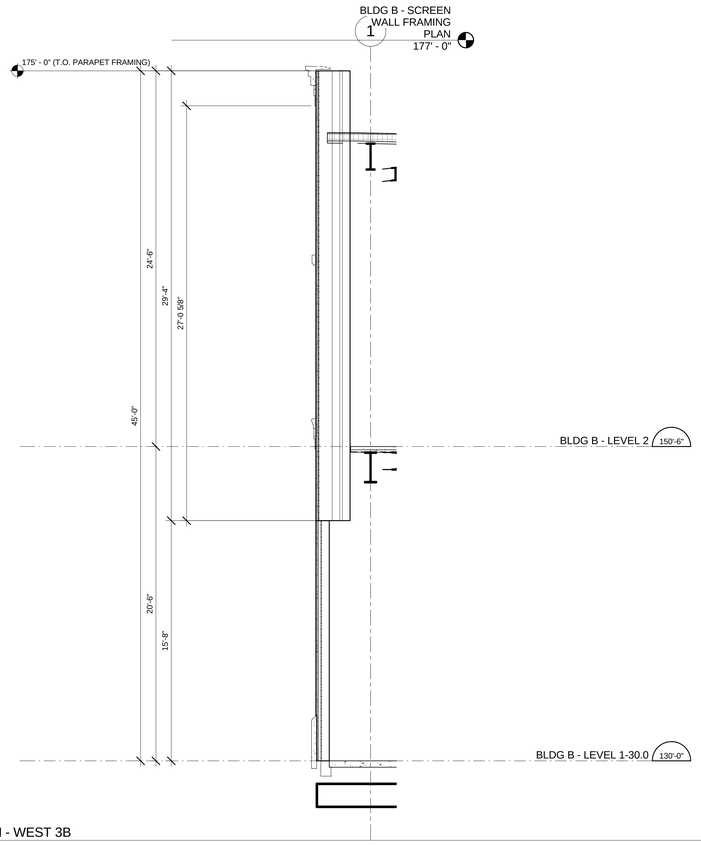

4 A3035 WALL SECTION - WEST 3B
Scale: 1/4" = 1'-0"

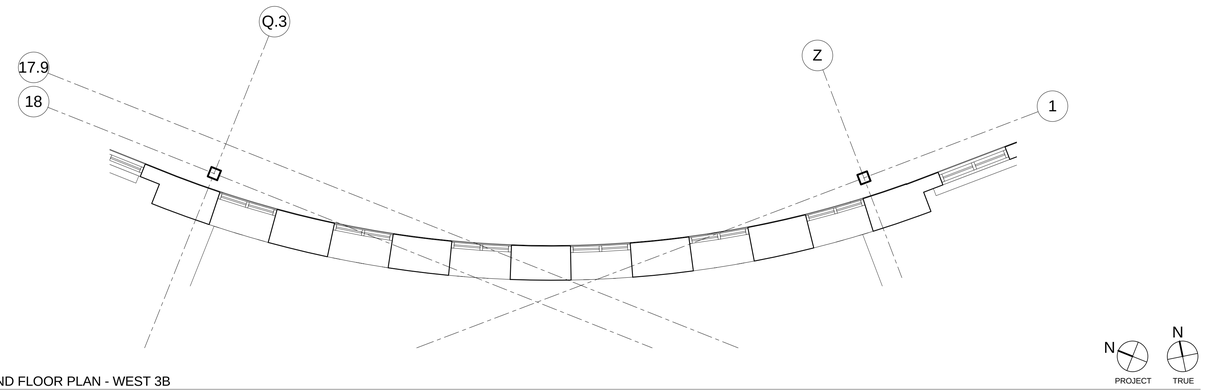

2 A3035 PARTIAL SECOND FLOOR PLAN - WEST 3B
Scale: 1/4" = 1'-0"

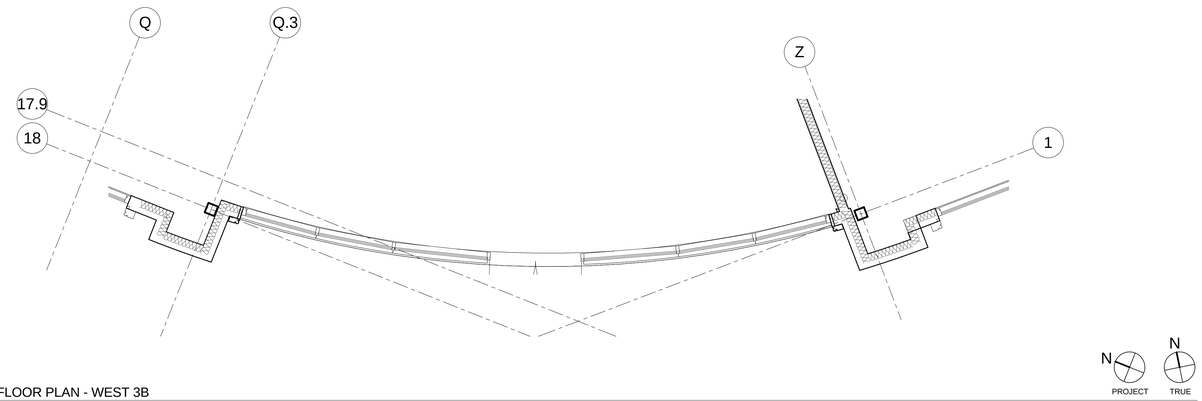

1 A3035 PARTIAL FIRST FLOOR PLAN - WEST 3B
Scale: 1/4" = 1'-0"

CLIENT

CENTERCAL PROPERTIES, LLC

COPYRIGHT:

Any reproduction or distribution for any purpose other than authorized by IBI Group is forbidden. Written dimensions shall have precedence over scaled dimensions. Contractors shall verify and be responsible for all dimensions and conditions on site. IBI Group shall be informed of any variations from the dimensions and conditions shown on the drawing. Shop drawings shall be submitted to IBI Group for approval before proceeding with fabrication.

COPYRIGHT © 2016 IBI GROUP

ISSUES

NO.	ISSUANCE	STATUS	DATE
1	PROGRESS SET		5/26/2016

SEAL

10759 REGISTERED ARCHITECT
CRAIG ROTHENBURGER
STATE OF WASHINGTON

SUB CONSULTANT

PRIME CONSULTANT

IBI
ibigroup.com

PROJECT
The Village at Totem Lake - Building B
Kirkland, Washington

PROJECT NO:	Building B
DRAWN BY:	Author
CHKD' BY:	Checker
SCALE:	1/4" = 1'-0"
DATE:	05/26/2016

SHEET TITLE
ENLARGED ELEV, PART. PLAN & WALL SECTIONS - WEST 3B

BLDG	SHEET NUMBER	ISSUE
B	A3035	

C:\Users\bjan.shoieh\Documents\ATW_Totem_BldgB_A_2015_bjan.shoieh.rvt

5/26/2016 7:01:08 PM

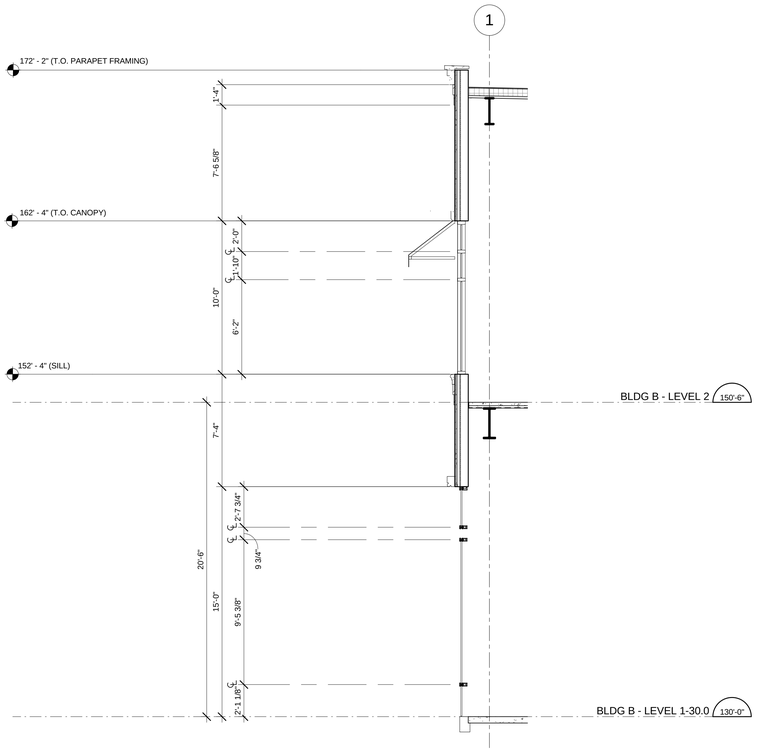

5 / A3036 WALL SECTION 2 - WEST 3C
Scale: 1/4" = 1'-0"

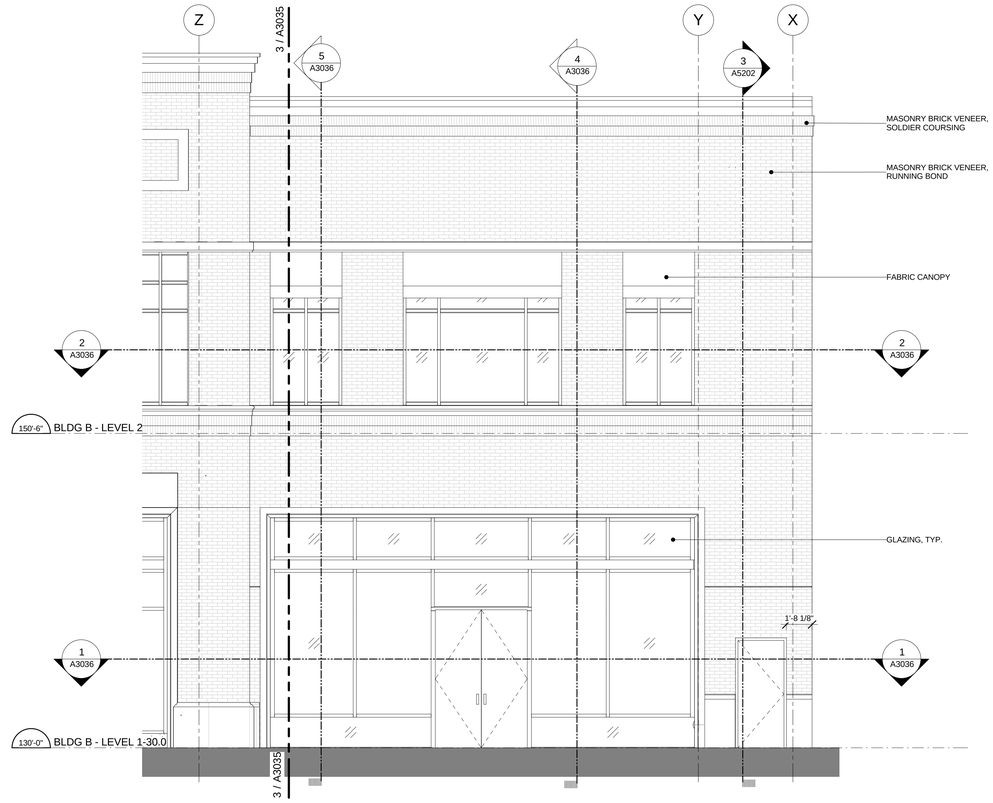

3 / A3036 ENLARGED ELEVATION - WEST 3C
Scale: 1/4" = 1'-0"

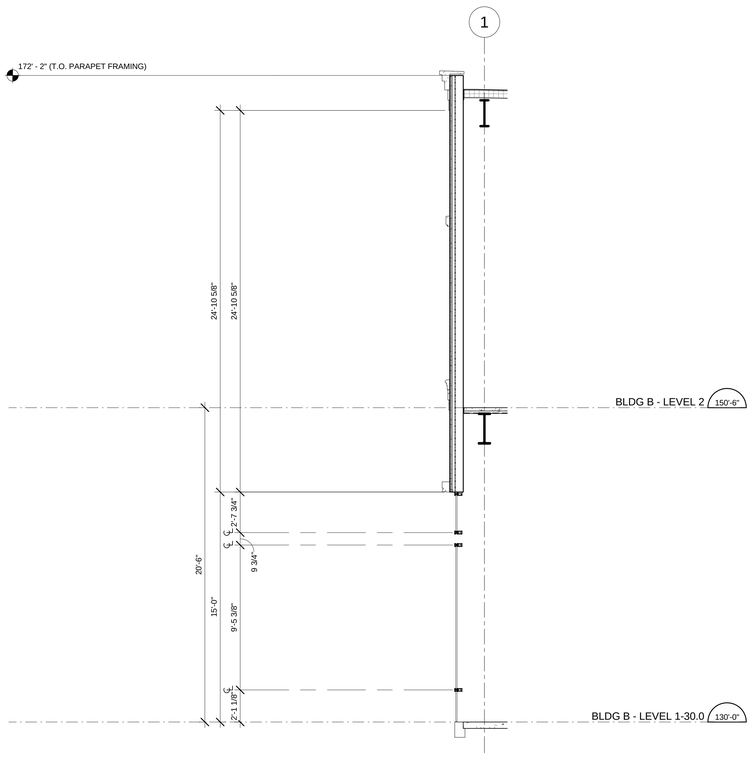

4 / A3036 WALL SECTION - WEST 3C
Scale: 1/4" = 1'-0"

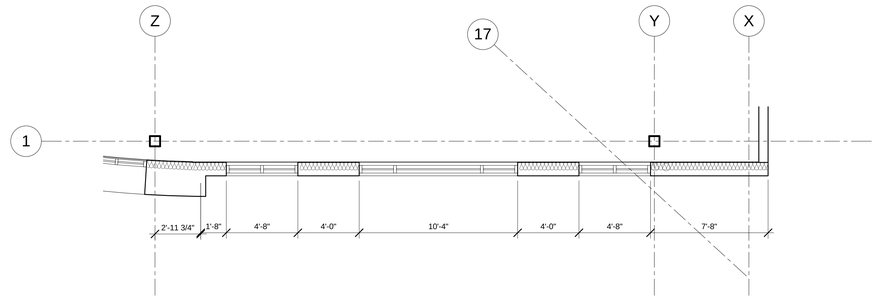

2 / A3036 PARTIAL SECOND FLOOR PLAN - WEST 3C
Scale: 1/4" = 1'-0"

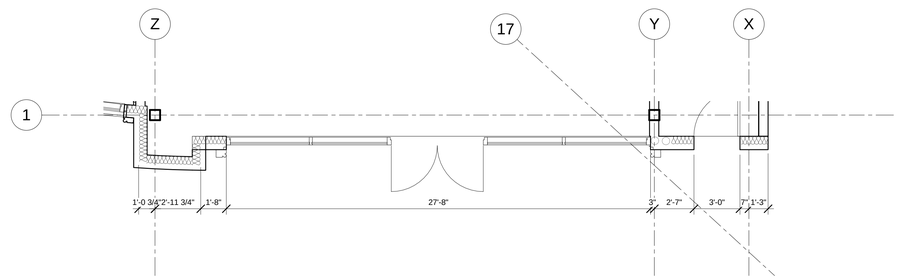

1 / A3036 PARTIAL FIRST FLOOR PLAN - WEST 3C
Scale: 1/4" = 1'-0"

N PROJECT
N TRUE

CLIENT

CENTERCAL PROPERTIES, LLC

COPYRIGHT:

Any reproduction or distribution for any purpose other than authorized by IBI Group is forbidden. Written dimensions shall have precedence over scaled dimensions. Contractors shall verify and be responsible for all dimensions and conditions on site. Any discrepancies shall be reported to the consultant from the dimensions and conditions shown on the drawing. Shop drawings shall be submitted to IBI Group for approval before proceeding with fabrication.

COPYRIGHT © 2016 IBI GROUP

ISSUES

NO.	ISSUANCE	STATUS	DATE

SEAL

10759 REGISTERED ARCHITECT
CRAIG ROTHENBURGER
STATE OF WASHINGTON

SUB CONSULTANT

PRIME CONSULTANT

IBI
ibigroup.com

PROJECT
The Village at Totem Lake - Building B
Kirkland, Washington

PROJECT NO:	Building B
DRAWN BY:	Author
CHKD' BY:	Checker
SCALE:	1/4" = 1'-0"
DATE:	05/26/2016

SHEET TITLE
ENLARGED ELEV, PART. PLAN & WALL SECTIONS - WEST 3C

BLDG	SHEET NUMBER	ISSUE
B	A3036	

C:\Users\bjan.shoieh\Documents\ATW_Totem_BldgB_A_2016_bjan.shoieh.rvt

5/26/2016 7:01:11 PM

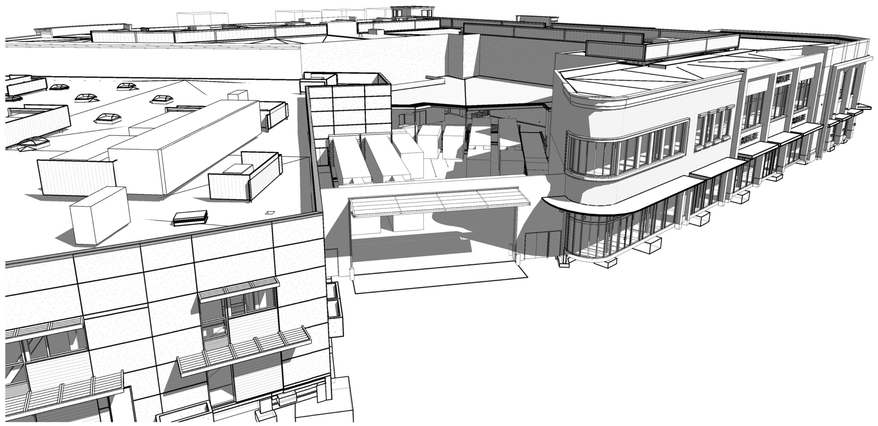

3 A3100 VIEW INTO LOADING DOCK
Scale: NTS

1 A3100 VIEW FROM NORTHWEST
Scale: NTS

2 A3100 VIEW FROM NORTHEAST
Scale: NTS

CLIENT

CENTERCAL PROPERTIES, LLC

COPYRIGHT:

Any reproduction or distribution for any purpose other than authorized by IBI Group is forbidden. Written dimensions shall have precedence over scaled dimensions. Contractors shall verify and be responsible for all dimensions and conditions on site. IBI Group must be notified of any variation from the dimensions and conditions shown on the drawing. Shop drawings shall be submitted to IBI Group for approval before proceeding with fabrication.

COPYRIGHT © 2016 IBI GROUP

ISSUES

NO.	ISSUANCE	STATUS	DATE

SEAL

10759 REGISTERED ARCHITECT
CRAIG ROTHENBURGER
STATE OF WASHINGTON

SUB CONSULTANT

PRIME CONSULTANT

IBI
ibigroup.com

PROJECT
The Village at Totem Lake - Building B
Kirkland, Washington

PROJECT NO:	Building B
DRAWN BY:	Author
CHKD' BY:	Checker
SCALE:	
DATE:	05/26/2016

SHEET TITLE
3D VIEWS

BLDG	SHEET NUMBER	ISSUE
B	A3100	

C:\Users\bjan.shoaib\Documents\ATW_Totem_Bldg B_A_2016_Bjan shoaib.rvt

5/26/2016 7:01:50 PM

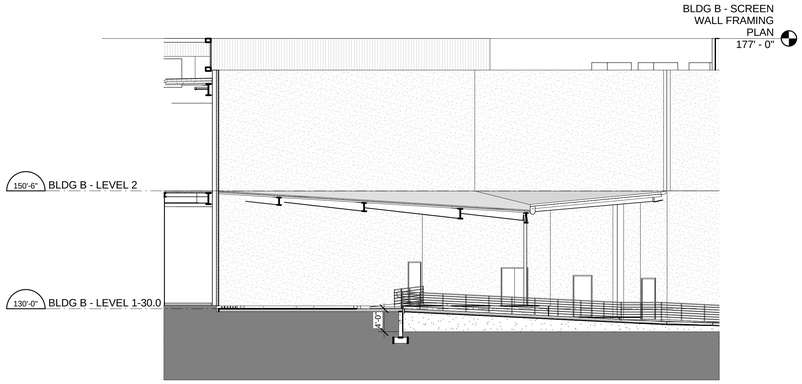

3 A4001 SECTION THROUGH LOADING DOCK
Scale: 3/32" = 1'-0"

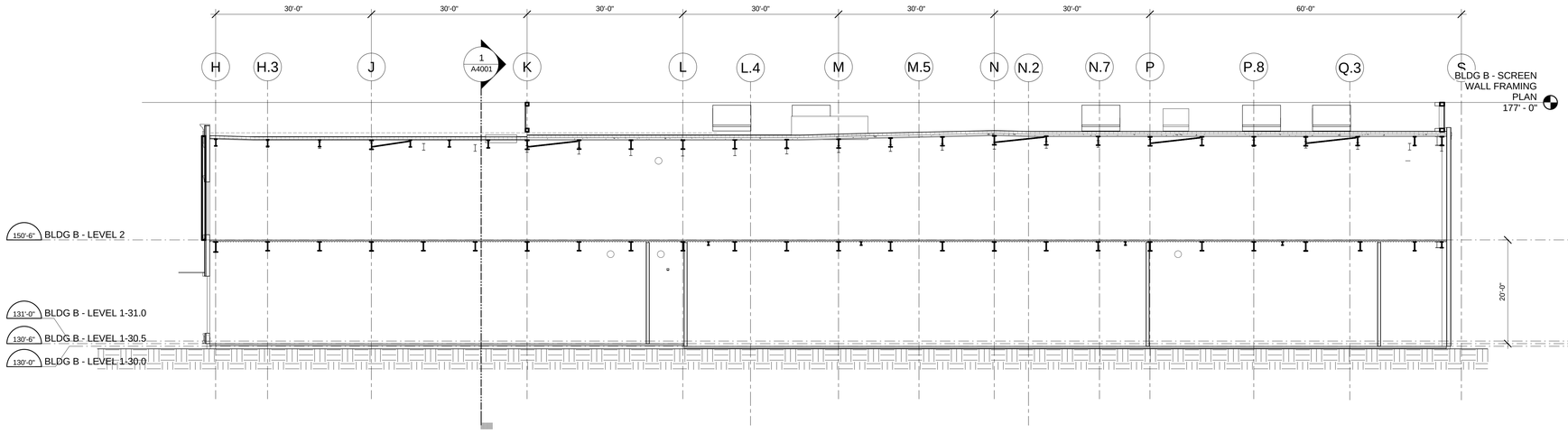

2 A4001 NORTH-SOUTH BUILDING SECTION
Scale: 3/32" = 1'-0"

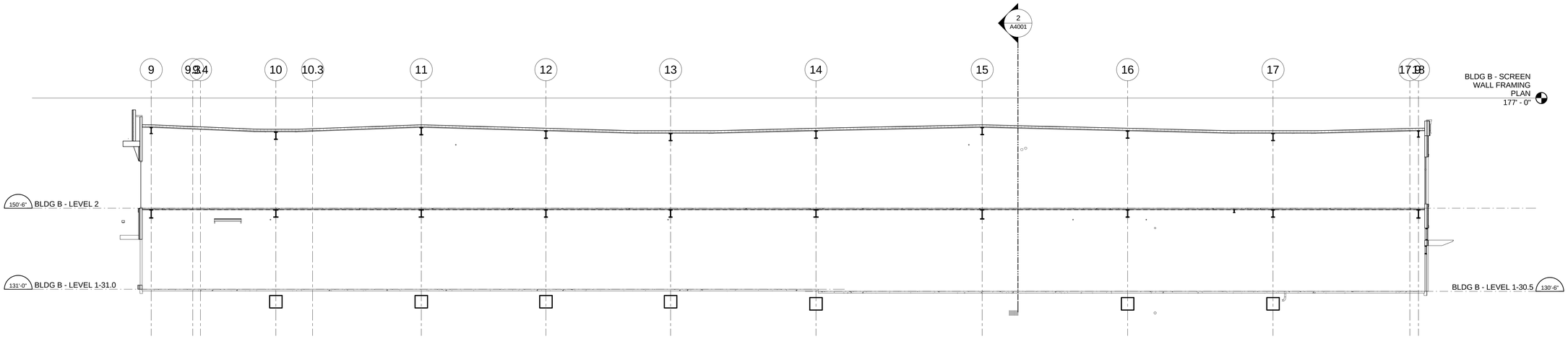

1 A4001 Section 3
Scale: 3/32" = 1'-0"

C:\Users\bjan.shoieh\Documents\ATW_Totem_Bldg B_A_2016_bjan.shoieh.rvt

5/26/2016 7:02:09 PM

CLIENT

CENTERCAL PROPERTIES, LLC

COPYRIGHT:

Any reproduction or distribution for any purpose other than authorized by IBI Group is forbidden. Written dimensions shall have precedence over scaled dimensions. Contractors shall verify and be responsible for all dimensions and conditions on the job, and report any errors, omissions or conflicts in the dimensions and conditions shown on the drawing. Shop drawings shall be submitted to IBI Group for approval before proceeding with fabrication.

COPYRIGHT © 2016 IBI GROUP

ISSUES

NO.	ISSUANCE	STATUS	DATE
1	PROGRESS SET		5/26/2016

SEAL

10759 REGISTERED ARCHITECT
CRAIG ROTHENBURGER
STATE OF WASHINGTON

SUB CONSULTANT

PRIME CONSULTANT

IBI ibigroup.com

PROJECT
The Village at Totem Lake - Building B
Kirkland, Washington

PROJECT NO:	Building B
DRAWN BY:	Author
CHKD' BY:	Checker
SCALE:	3/32" = 1'-0"
DATE:	05/26/2016

SHEET TITLE
BUILDING SECTIONS

BLDG	SHEET NUMBER	ISSUE
B	A4001	

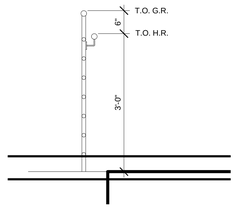

5 A5201 TYPICAL GUARDRAIL SECTION
Scale: 3/4" = 1'-0"

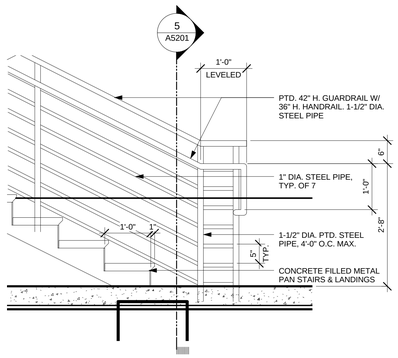

4 A5201 TYPICAL GUARDRAIL DETAIL
Scale: 3/4" = 1'-0"

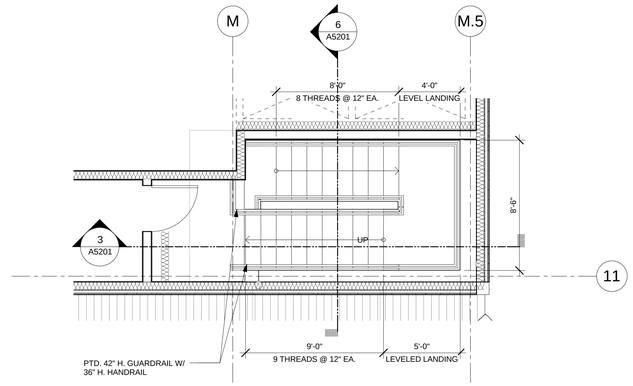

2 A5201 PARTIAL STAIR PLAN - EAST - LEVEL 2
Scale: 1/4" = 1'-0"

N PROJECT N TRUE

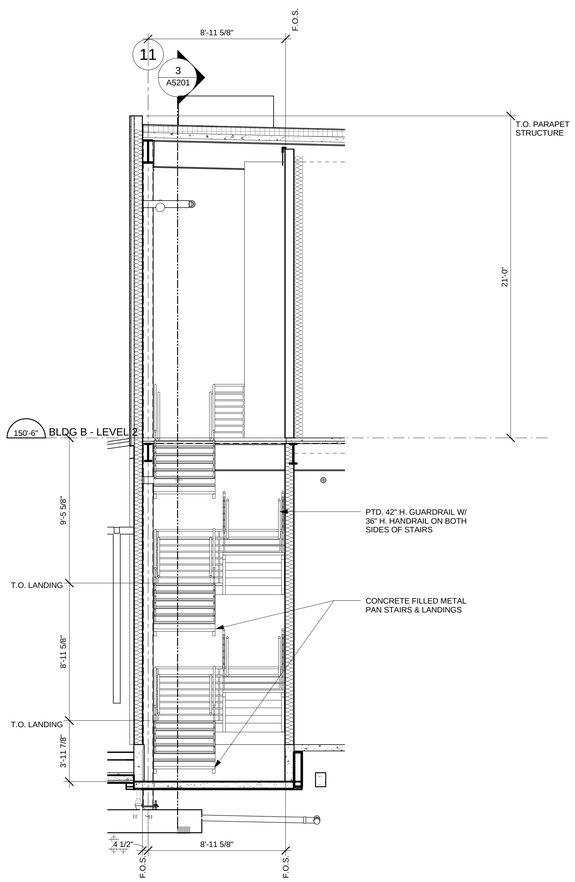

6 A5201 STAIR SECTION LAT. - EAST - B-110
Scale: 1/4" = 1'-0"

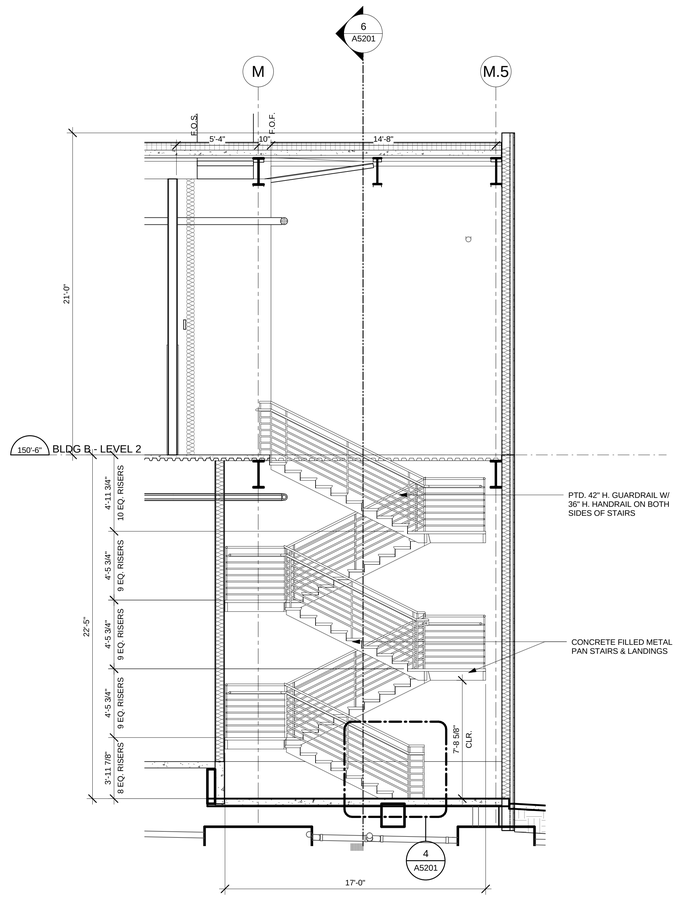

3 A5201 STAIR SECTION LONG. - EAST - B-110
Scale: 1/4" = 1'-0"

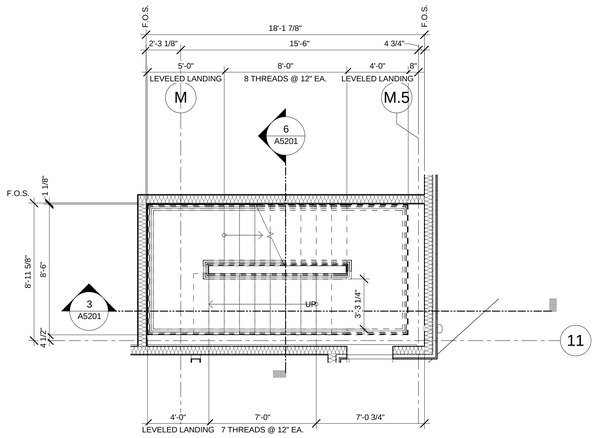

1 A5201 PARTIAL STAIR PLAN - EAST - LEVEL 1
Scale: 1/4" = 1'-0"

N PROJECT N TRUE

CLIENT

CENTERCAL PROPERTIES, LLC

COPYRIGHT:

Any reproduction or distribution for any purpose other than authorized by IBI Group is forbidden. Written dimensions shall have precedence over scaled dimensions. Contractors shall verify and be responsible for all dimensions and conditions on site. This office must be notified of any variation from the dimensions and conditions shown on the drawing. Shop drawings shall be submitted to IBI Group for approval before proceeding with fabrication.

COPYRIGHT © 2016 IBI GROUP

ISSUES

NO.	ISSUANCE	STATUS	DATE
1	PROGRESS SET		5/26/2016

SEAL

10759 REGISTERED ARCHITECT
CRAIG ROTHENBURGER
STATE OF WASHINGTON

SUB CONSULTANT

PRIME CONSULTANT

IBI ibigroup.com

PROJECT
The Village at Totem Lake - Building B
Kirkland, Washington

PROJECT NO:	Building B
DRAWN BY:	Author
CHKD' BY:	Checker
SCALE:	As indicated
DATE:	05/26/2016

SHEET TITLE
STAIR PLANS & SECTIONS - B-110

BLDG	SHEET NUMBER	ISSUE
B	A5201	

C:\Users\bjaya.shoyele\Documents\ATW_Totem_Bldg\B_A_2016_bjaya.shoyele.rvt

5/26/2016 7:02:14 PM

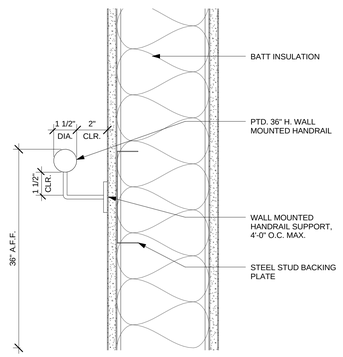

4 A5202 TYPICAL WALL MOUNTED HANDRAIL SECTION
Scale: 3" = 1'-0"

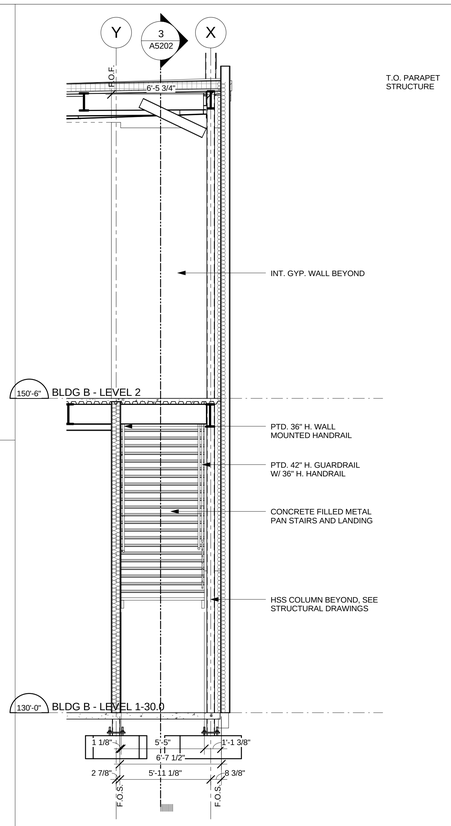

5 A5202 STAIR SECTION LAT. - SOUTHWEST - B-180
Scale: 1/4" = 1'-0"

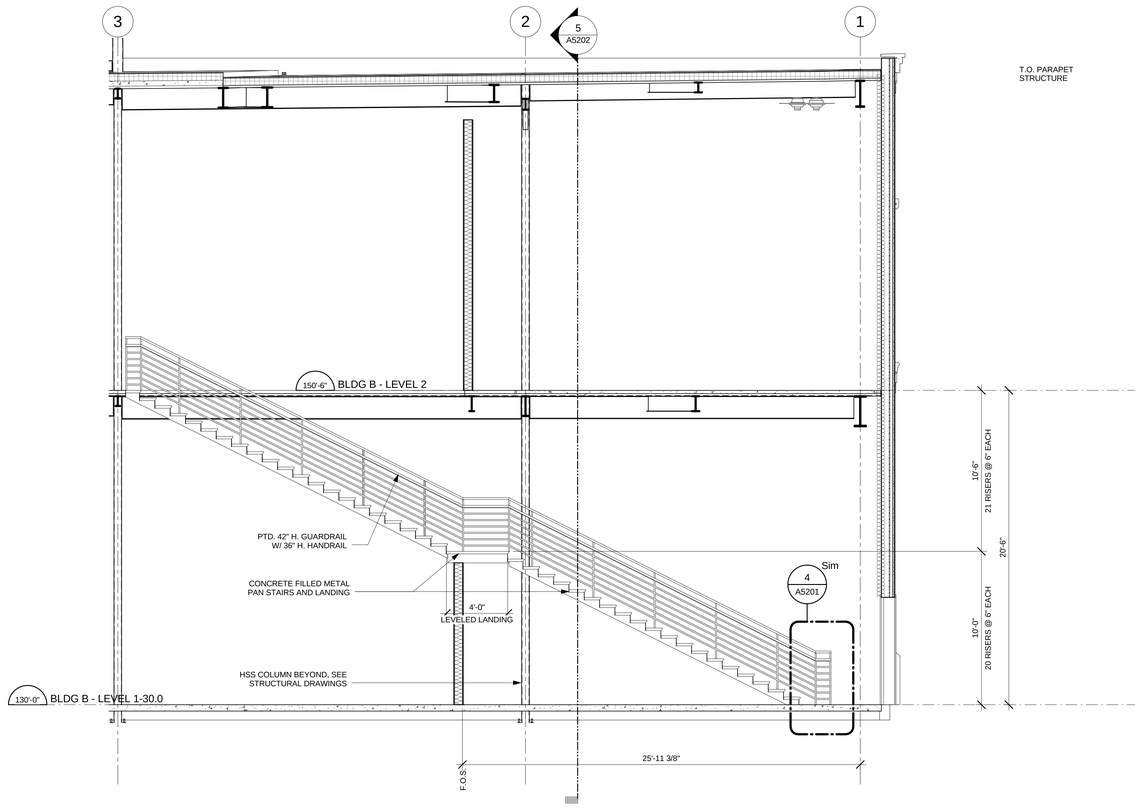

3 A5202 STAIR SECTION LONG. - SOUTHWEST - B-180
Scale: 1/4" = 1'-0"

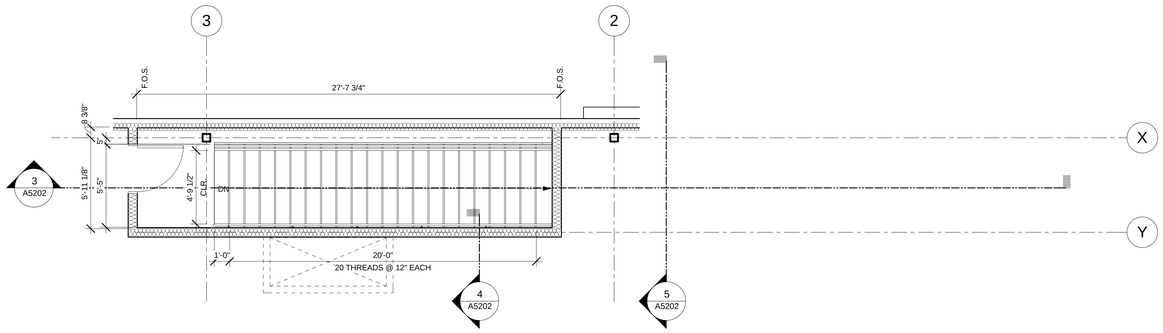

2 A5202 STAIR PLAN - SOUTHWEST - LEVEL 2
Scale: 1/4" = 1'-0"

PROJECT N
TRUE N

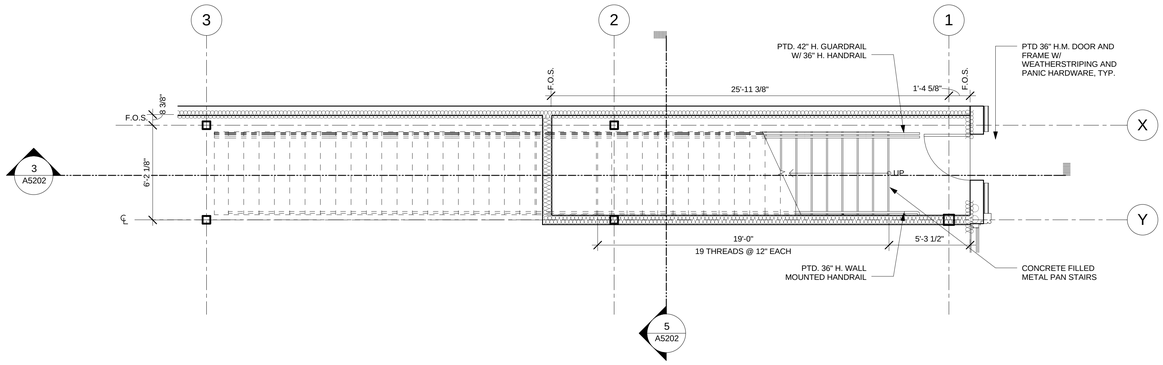

1 A5202 STAIR PLAN - SOUTHWEST - LEVEL 1
Scale: 1/4" = 1'-0"

CLIENT
CENTERCAL PROPERTIES, LLC

COPYRIGHT:

Any reproduction or distribution for any purpose other than authorized by IBI Group is forbidden. Written dimensions shall have precedence over scaled dimensions. Contractors shall verify and be responsible for all dimensions and conditions on the job, and report any errors or omissions to the architect from the dimensions and conditions shown on the drawing. Shop drawings shall be submitted to IBI Group for approval before proceeding with fabrication.

COPYRIGHT © 2016 IBI GROUP

ISSUES

NO.	ISSUANCE	STATUS	DATE
1	PROGRESS SET		5/26/2016

SEAL
10759 REGISTERED ARCHITECT
CRAIG ROTHENBURGER
STATE OF WASHINGTON

SUB CONSULTANT

PRIME CONSULTANT
IBI
ibigroup.com

PROJECT
The Village at Totem Lake - Building B
Kirkland, Washington

PROJECT NO:	Building B
DRAWN BY:	Author
CHKD' BY:	Checker
SCALE:	As indicated
DATE:	05/26/2016

SHEET TITLE
STAIR PLANS & SECTIONS - B-180

BLDG	SHEET NUMBER	ISSUE
B	A5202	

C:\Users\bjan.shoieh\Documents\ATW_Totem_BldgB_A_2016_bjan.shoieh.rvt
5/26/2016 7:02:19 PM

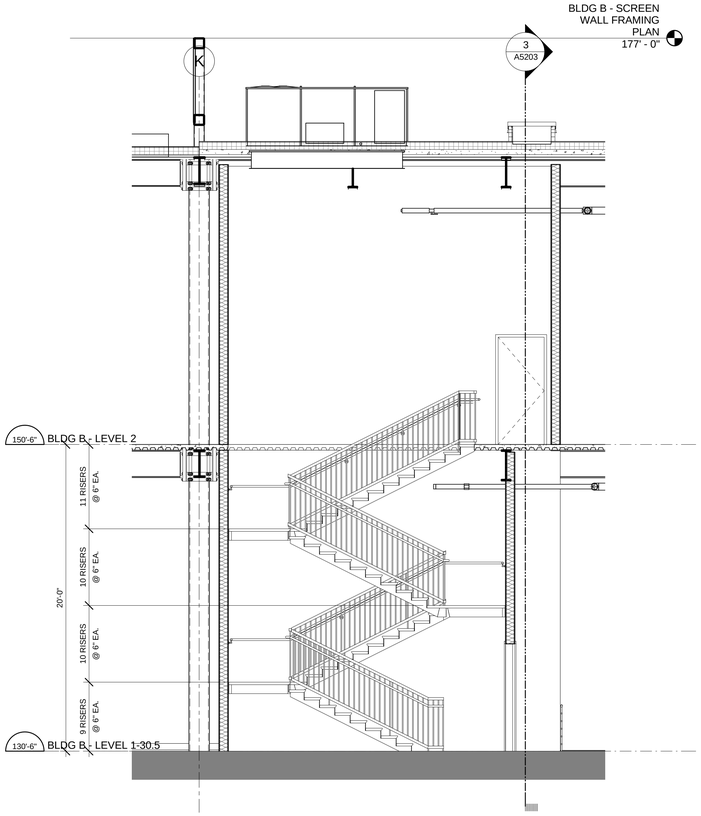

4 A5203 STAIR SECTION LONG. - WEST - B-130 & B-140
Scale: 1/4" = 1'-0"

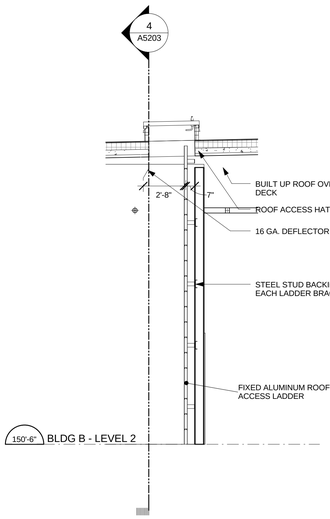

3 A5203 ROOF HATCH SECTION
Scale: 1/4" = 1'-0"

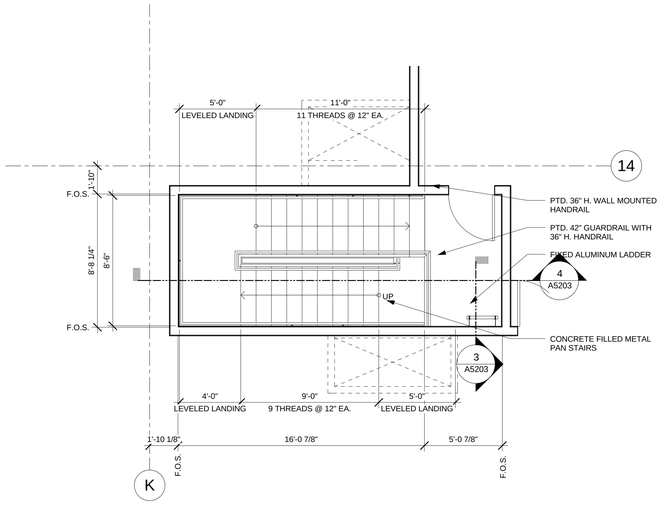

2 A5203 STAIR PLAN - WEST - LEVEL 2
Scale: 1/4" = 1'-0"

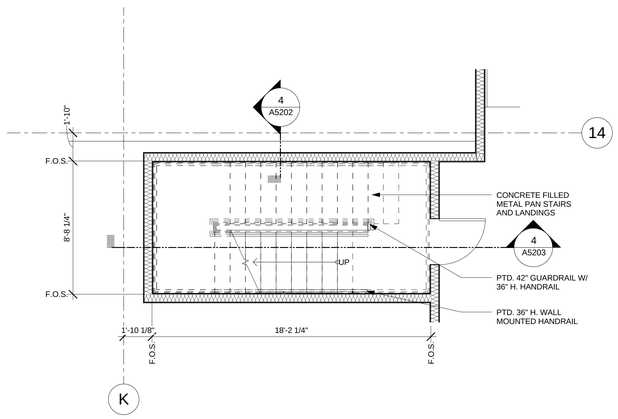

1 A5203 STAIR PLAN - WEST - LEVEL 1
Scale: 1/4" = 1'-0"

CLIENT

CENTERCAL PROPERTIES, LLC

COPYRIGHT:

Any reproduction or distribution for any purpose other than authorized by IBI Group is forbidden. Written dimensions shall have precedence over scaled dimensions. Contractors shall verify and be responsible for all dimensions and conditions on the job, and IBI Group must be informed of any variations from the dimensions and conditions shown on the drawing. Shop drawings shall be submitted to IBI Group for approval before proceeding with fabrication.

COPYRIGHT © 2016 IBI GROUP

ISSUES

NO.	ISSUANCE	STATUS	DATE
1	PROGRESS SET		5/26/2016

SEAL

10759 REGISTERED ARCHITECT
CRAIG ROTHENBURGER
STATE OF WASHINGTON

SUB CONSULTANT

PRIME CONSULTANT

IBI
ibigroup.com

PROJECT

The Village at Totem Lake - Building B
Kirkland, Washington

PROJECT NO:	Building B
DRAWN BY:	Author
CHKD' BY:	Checker
SCALE:	1/4" = 1'-0"
DATE:	05/26/2016

SHEET TITLE

STAIR PLANS & SECTIONS - B-130 & B-140

BLDG	SHEET NUMBER	ISSUE
B	A5203	

C:\Users\jsjas.shoieh\Documents\ATW_Totem_Bldg B_A_2016_\jsjas.shoieh.rvt

5/26/2016 7:02:22 PM

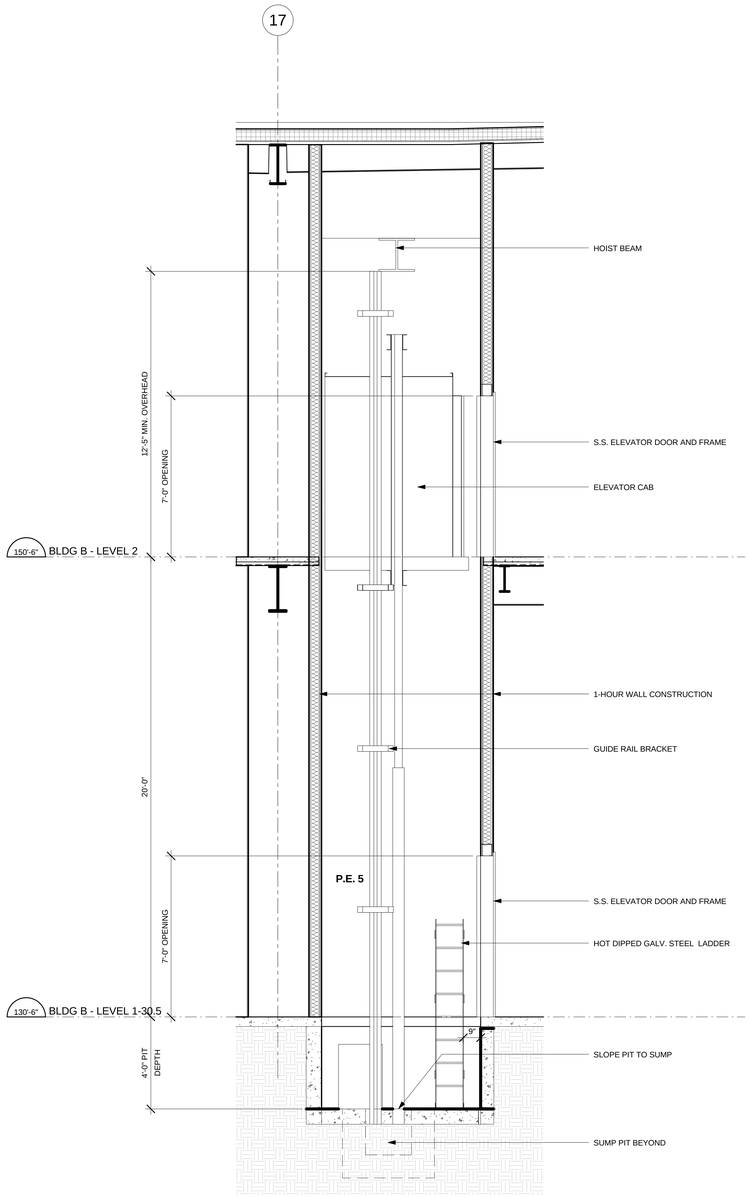

17 A5302 ELEVATOR SECTION - WEST
Scale: 3/8" = 1'-0"

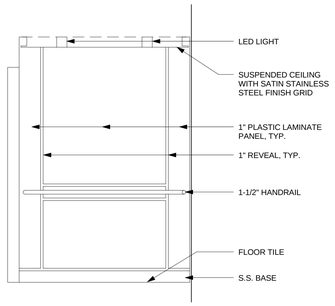

7 A5302 Elevation 1 - d
Scale: 1/2" = 1'-0"

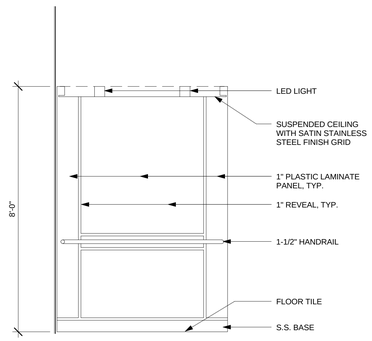

6 A5302 Elevation 1 - b
Scale: 1/2" = 1'-0"

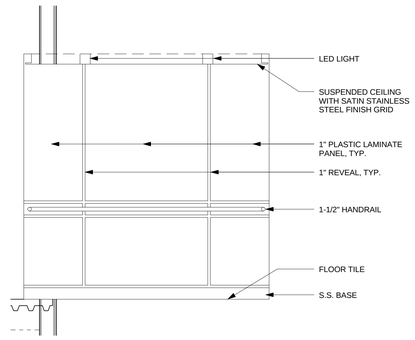

5 A5302 Elevation 1 - a
Scale: 1/2" = 1'-0"

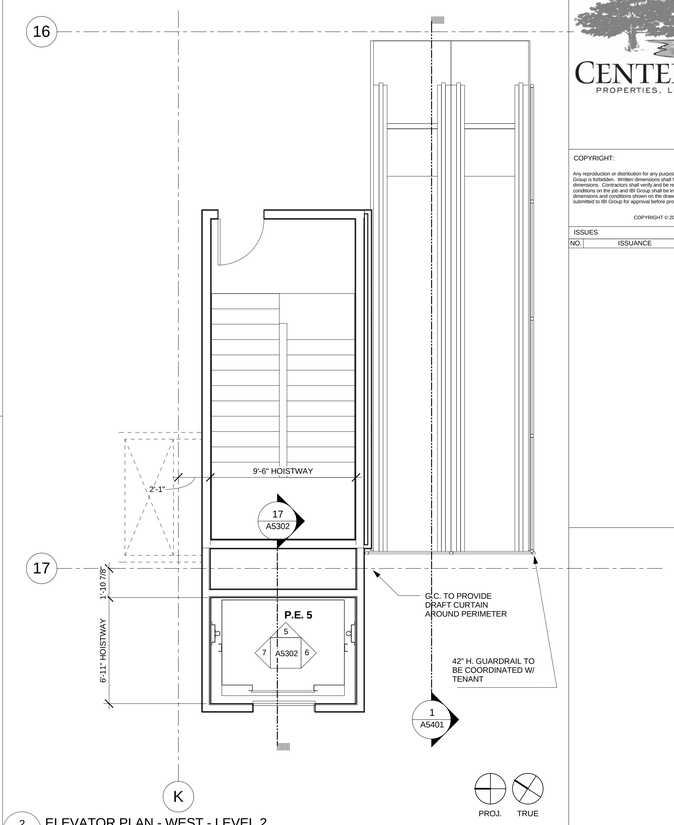

2 A5302 ELEVATOR PLAN - WEST - LEVEL 2
Scale: 1/4" = 1'-0"

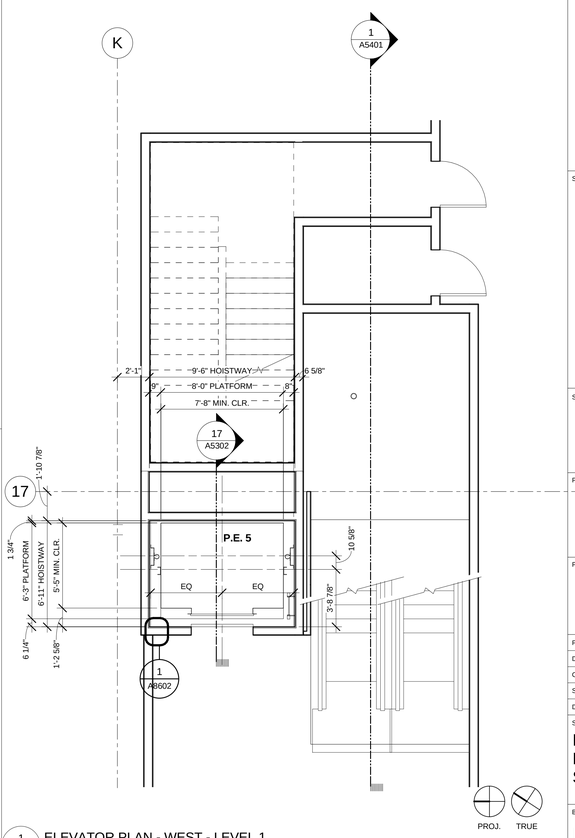

1 A5302 ELEVATOR PLAN - WEST - LEVEL 1
Scale: 1/4" = 1'-0"

CLIENT

CENTERCAL PROPERTIES, LLC

COPYRIGHT:

Any reproduction or distribution for any purpose other than authorized by IBI Group is forbidden. Written dimensions shall have precedence over scaled dimensions. Contractors shall verify and be responsible for all dimensions and conditions on the job, and report any errors or omissions to the architect from the dimensions and conditions shown on the drawing. Shop drawings shall be submitted to IBI Group for approval before proceeding with fabrication.

COPYRIGHT © 2016 IBI GROUP

ISSUES

NO.	ISSUANCE	STATUS	DATE

SEAL

10759 REGISTERED ARCHITECT
CRAIG ROTHENBURGER
STATE OF WASHINGTON

SUB CONSULTANT

PRIME CONSULTANT

IBI ibigroup.com

PROJECT
The Village at Totem Lake - Building B
Kirkland, Washington

PROJECT NO:	Building B
DRAWN BY:	Author
CHKD' BY:	Checker
SCALE:	As indicated
DATE:	05/26/2016

SHEET TITLE
PASSENGER ELEVATOR PLANS & SECTIONS

BLDG	SHEET NUMBER	ISSUE
B	A5302	

C:\Users\bjan.shoeleh\Documents\ATW_Totem_Bldg B_A_2016_bjan.shoeleh.rvt

5/26/2016 7:02:26 PM

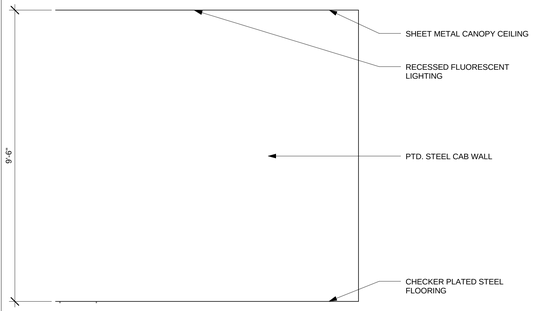

20 A5303 FREIGHT ELEVATOR INTERIOR ELEVATION - EAST
Scale: 1/2" = 1'-0"

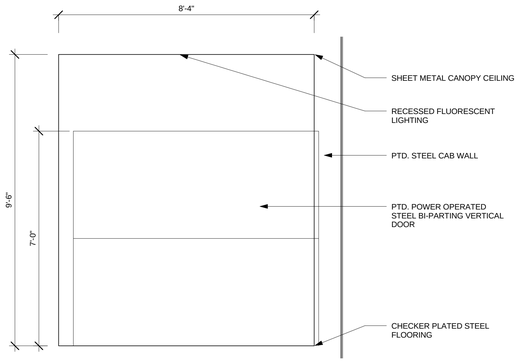

19 A5303 FREIGHT ELEVATOR INTERIOR ELEVATION - NORTH
Scale: 1/2" = 1'-0"

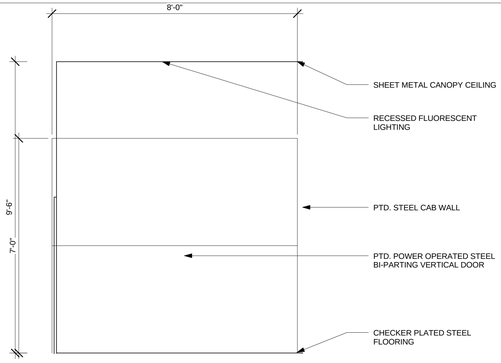

18 A5303 FREIGHT ELEVATOR INTERIOR ELEVATION - SOUTH
Scale: 1/2" = 1'-0"

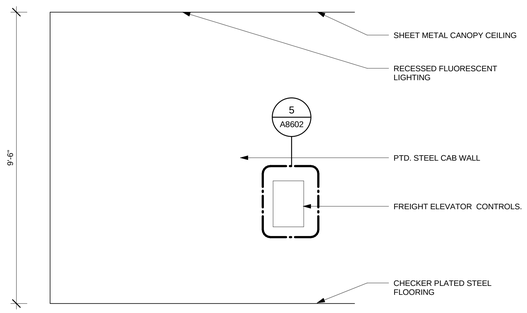

17 A5303 FREIGHT ELEVATOR INTERIOR ELEVATION - WEST
Scale: 1/2" = 1'-0"

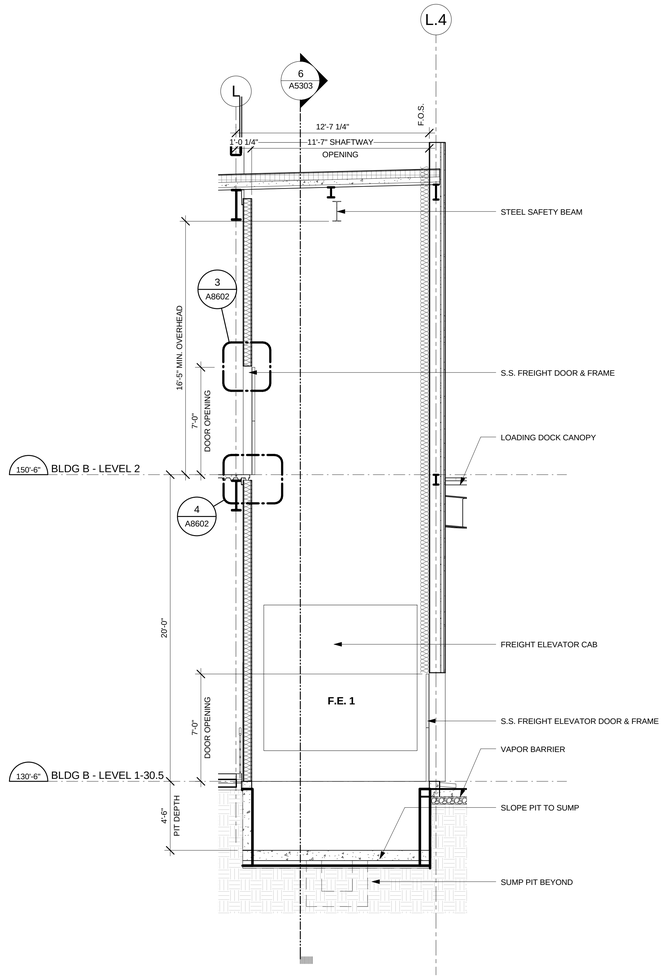

14 A5303 FREIGHT ELEVATOR SECTION
Scale: 1/4" = 1'-0"

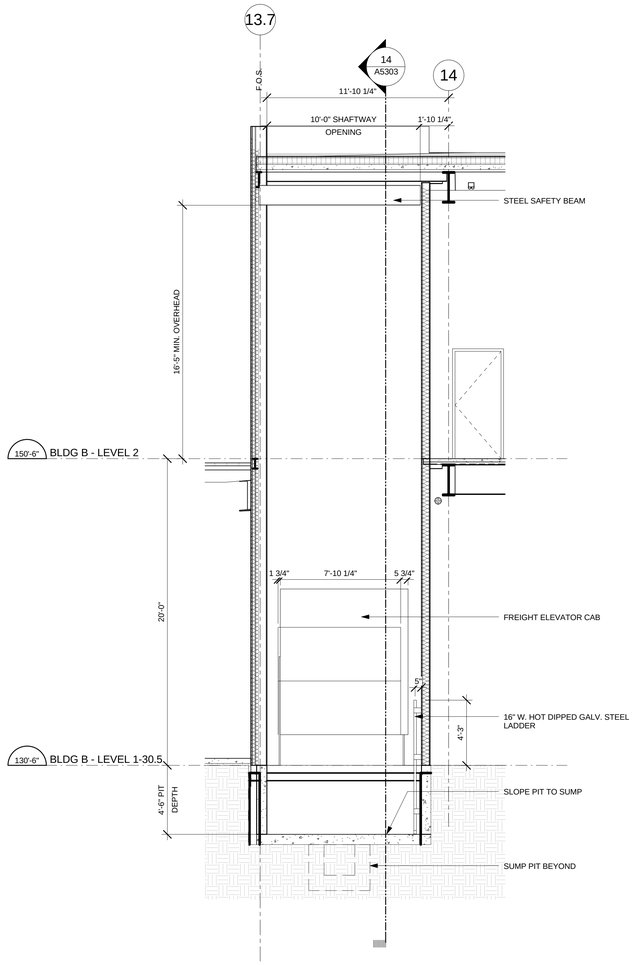

6 A5303 FREIGHT ELEVATOR CROSS SECTION
Scale: 1/4" = 1'-0"

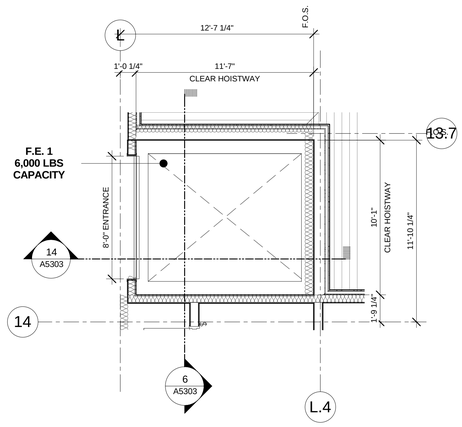

13 A5303 FREIGHT ELEVATOR PLAN - LEVEL 2
Scale: 1/4" = 1'-0"

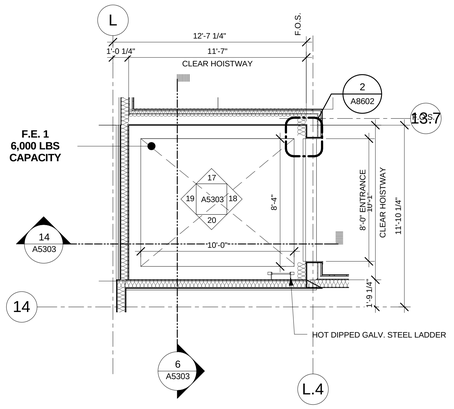

5 A5303 FREIGHT ELEVATOR PLAN - LEVEL 1
Scale: 1/4" = 1'-0"

PROJ. TRUE

C:\Users\craigs.shoreline\Documents\ATW_Totem_Bldg B_A_2016_craigs.shoreline.rvt

5/26/2016 7:02:30 PM

CLIENT

CENTERCAL PROPERTIES, LLC

COPYRIGHT:

Any reproduction or distribution for any purpose other than authorized by IBI Group is forbidden. Written dimensions shall have precedence over scaled dimensions. Contractors shall verify and be responsible for all dimensions and conditions on the job, and report any errors, omissions or conflicts in them the dimensions and conditions shown on the drawing. Shop drawings shall be submitted to IBI Group for approval before proceeding with fabrication.

COPYRIGHT © 2016 IBI GROUP

ISSUES

NO.	ISSUANCE	STATUS	DATE

SEAL

10759 REGISTERED ARCHITECT
CRAIG ROTHENBURGER
STATE OF WASHINGTON

SUB CONSULTANT

PRIME CONSULTANT

IBI
ibigroup.com

PROJECT
The Village at Totem Lake - Building B
Kirkland, Washington

PROJECT NO:	Building B
DRAWN BY:	Author
CHKD' BY:	Checker
SCALE:	As indicated
DATE:	05/26/2016

SHEET TITLE
FREIGHT ELEVATOR PLANS & SECTIONS

BLDG	SHEET NUMBER	ISSUE
B	A5303	

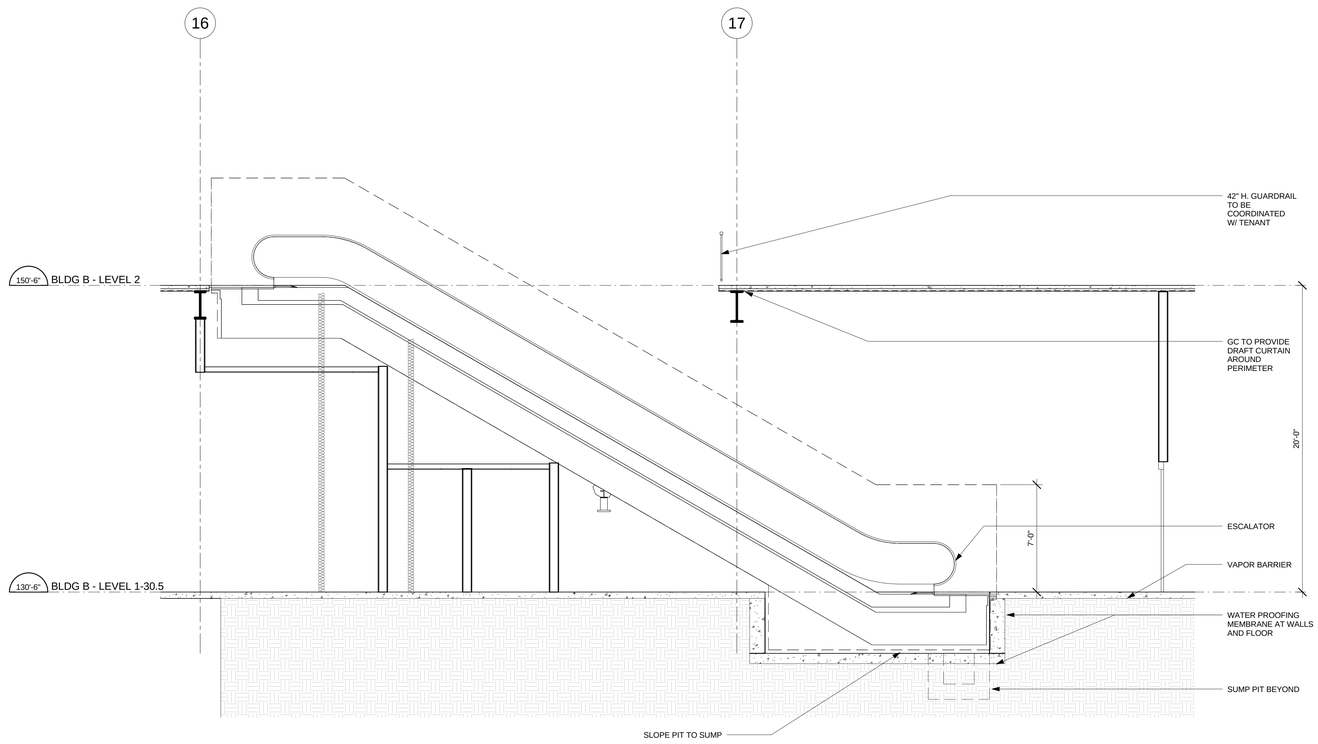

1 A5401 ESCALATOR SECTION
Scale: 1/4" = 1'-0"

CLIENT

CENTERCAL PROPERTIES, LLC

COPYRIGHT:

Any reproduction or distribution for any purpose other than authorized by IBI Group is forbidden. Written dimensions shall have precedence over scaled dimensions. Contractors shall verify and be responsible for all dimensions and conditions on site. Any errors, omissions or conflicts must be reported to IBI Group the dimensions and conditions shown on the drawing. Shop drawings shall be submitted to IBI Group for approval before proceeding with fabrication.

COPYRIGHT © 2016 IBI GROUP

ISSUES

NO.	ISSUANCE	STATUS	DATE
1	PROGRESS SET		5/26/2016

SEAL

10759 REGISTERED ARCHITECT
CRAIG ROTHENBURGER
STATE OF WASHINGTON

SUB CONSULTANT

PRIME CONSULTANT

IBI
ibigroup.com

PROJECT
The Village at Totem Lake - Building B
Kirkland, Washington

PROJECT NO:	Building B
DRAWN BY:	Author
CHKD' BY:	Checker
SCALE:	1/4" = 1'-0"
DATE:	05/26/2016

SHEET TITLE
ESCALATOR PLANS & SECTIONS - B160

BLDG	SHEET NUMBER	ISSUE
B	A5401	

C:\Users\bjan.shoaleh\Documents\ATW_Totem_B\bjgB_A_2016_bjan.shoaleh.rvt

5/26/2016 7:02:31 PM

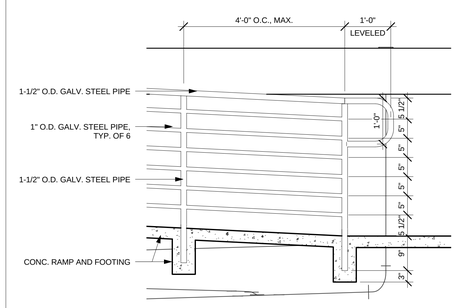

3 A8001 HANDRAIL @ RAMP

Scale: 3/4" = 1'-0"

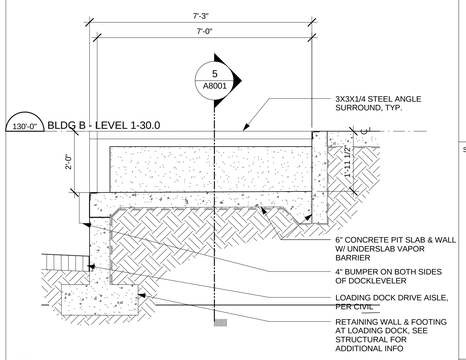

2 A8001 DECK LEVELER CONCRETE PIT SECTION

Scale: 1/2" = 1'-0"

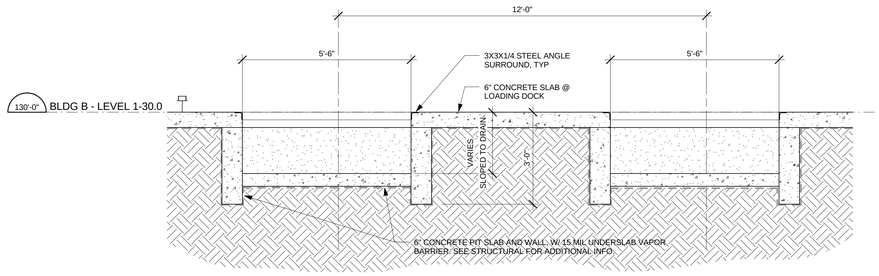

5 A8001 DECK LEVELER CONCRETE PIT

Scale: 1/2" = 1'-0"

CLIENT

CENTERCAL PROPERTIES, LLC

COPYRIGHT:

Any reproduction or distribution for any purpose other than authorized by IBI Group is forbidden. Written dimensions shall have precedence over scaled dimensions. Contractors shall verify and be responsible for all dimensions and conditions on this drawing. Any errors or omissions shall be reported to IBI Group the dimensions and conditions shown on the drawing. Shop drawings shall be submitted to IBI Group for approval before proceeding with fabrication.

COPYRIGHT © 2016 IBI GROUP

ISSUES

NO.	ISSUANCE	STATUS	DATE

SEAL

10759 REGISTERED ARCHITECT

CRAIG ROTHENBURGER
STATE OF WASHINGTON

SUB CONSULTANT

PRIME CONSULTANT

IBI
ibigroup.com

PROJECT

The Village at Totem Lake - Building B
Kirkland, Washington

PROJECT NO:	Building B
DRAWN BY:	Author
CHKD' BY:	Checker
SCALE:	As indicated
DATE:	05/26/2016

SHEET TITLE

SITE DETAILS

BLDG	SHEET NUMBER	ISSUE
B	A8001	

C:\Users\bjan.shoieh\Documents\ATW_Totem_B\bjgB_A_2016_bjan.shoieh.rvt

5/26/2016 7:02:33 PM

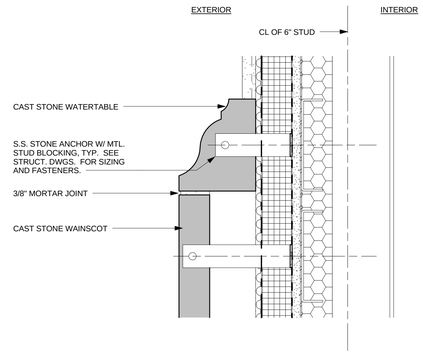

6 A8201 WALL SECTION @ WATERTABLE, TYP.
Scale: 3" = 1'-0"

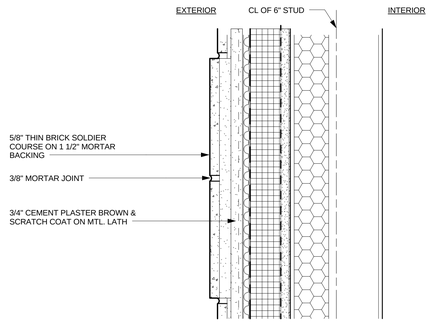

3 A8201 WALL SECTION @ SOLDIER COURSE, TYP.
Scale: 3" = 1'-0"

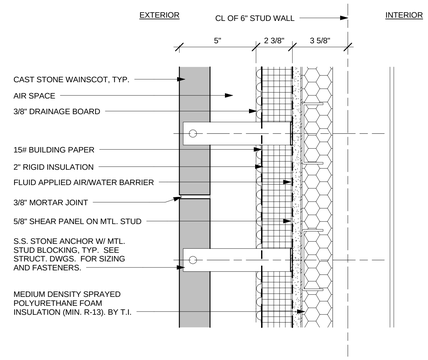

4 A8201 WALL SECTION @ WAINSCOT JOINT, TYP.
Scale: 3" = 1'-0"

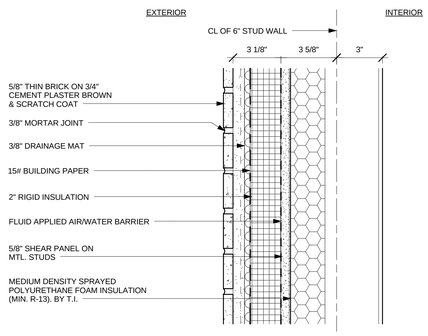

2 A8201 WALL SECTION @ THIN BRICK, TYP.
Scale: 3" = 1'-0"

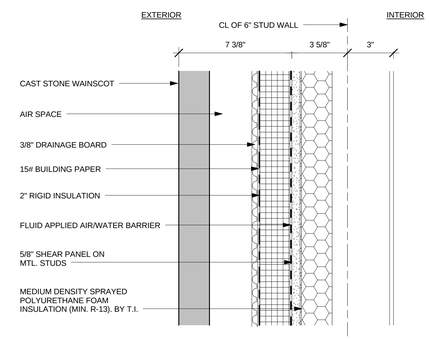

5 A8201 WALL SECTION @ WAINSCOT, TYP.
Scale: 3" = 1'-0"

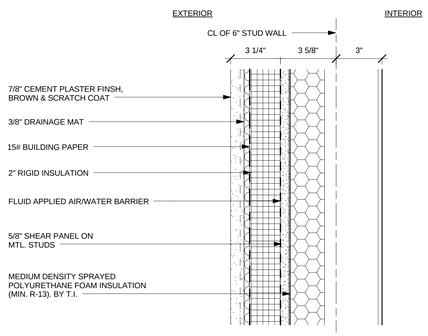

1 A8201 WALL SECTION @ STUCCO, TYP.
Scale: 3" = 1'-0"

CLIENT

CENTERCAL PROPERTIES, LLC

COPYRIGHT:

Any reproduction or distribution for any purpose other than authorized by IBI Group is forbidden. Written dimensions shall have precedence over scaled dimensions. Contractors shall verify and be responsible for all dimensions and conditions on site. IBI Group must be notified of any variation from the dimensions and conditions shown on the drawing. Shop drawings shall be submitted to IBI Group for approval before proceeding with fabrication.

COPYRIGHT © 2016 IBI GROUP

ISSUES

NO.	ISSUANCE	STATUS	DATE

SEAL

10759 REGISTERED ARCHITECT
CRAIG ROTHENBURGER
STATE OF WASHINGTON

SUB CONSULTANT

PRIME CONSULTANT

IBI
ibigroup.com

PROJECT
The Village at Totem Lake - Building B
Kirkland, Washington

PROJECT NO:	Building B
DRAWN BY:	Author
CHKD' BY:	Checker
SCALE:	3" = 1'-0"
DATE:	05/26/2016

SHEET TITLE
WALL DETAILS

BLDG	SHEET NUMBER	ISSUE
B	A8201	

C:\Users\bjan.shoieh\Documents\ATW_Totem_B\bjB_A_2016_bjan.shoieh.rvt

5/26/2016 7:02:34 PM

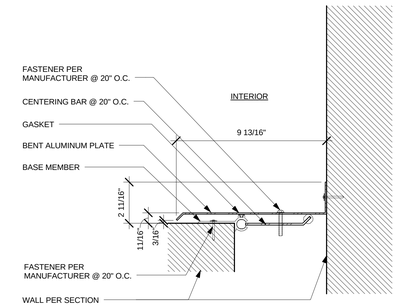

NOTE: SECTION @ CEILING IS SIMILAR

4 A8202 SEISMIC JOINT - INTERIOR WALL OR CEILING CORNER

Scale: 3" = 1'-0"

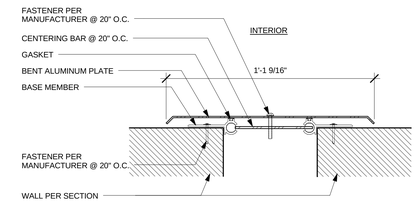

NOTE: SECTION @ CEILING IS SIMILAR

3 A8202 SEISMIC JOINT - INTERIOR WALL OR CEILING

Scale: 3" = 1'-0"

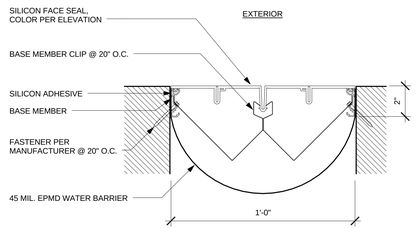

2 A8202 SEISMIC JOINT - EXTERIOR WALL FLUSH

Scale: 3" = 1'-0"

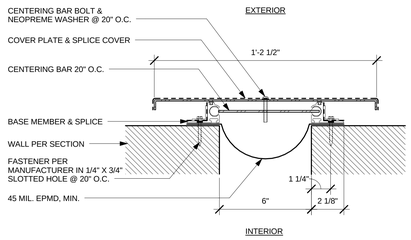

1 A8202 SEISMIC JOINT - EXTERIOR WALL

Scale: 3" = 1'-0"

CLIENT

CENTERCAL PROPERTIES, LLC

COPYRIGHT:

Any reproduction or distribution for any purpose other than authorized by IBI Group is forbidden. Written dimensions shall have precedence over scaled dimensions. Contractors shall verify and be responsible for all dimensions and conditions on this drawing. No ambiguities or discrepancies shall be taken the dimensions and conditions shown on the drawing. Shop drawings shall be submitted to IBI Group for approval before proceeding with fabrication.

COPYRIGHT © 2016 IBI GROUP

ISSUES

NO.	ISSUANCE	STATUS	DATE

SEAL

10759 REGISTERED ARCHITECT

CRAIG ROTHENBURGER
STATE OF WASHINGTON

SUB CONSULTANT

PRIME CONSULTANT

IBI
ibigroup.com

PROJECT

The Village at Totem Lake - Building B
Kirkland, Washington

PROJECT NO:	Building B
DRAWN BY:	Author
CHKD' BY:	Checker
SCALE:	3" = 1'-0"
DATE:	05/26/2016

SHEET TITLE

SEISMIC JOINT

BLDG	SHEET NUMBER	ISSUE
B	A8202	

C:\Users\bjan.shoieh\Documents\ATW_Totem_B\bjgB_A_2016_bjan.shoieh.rvt

5/26/2016 7:02:36 PM

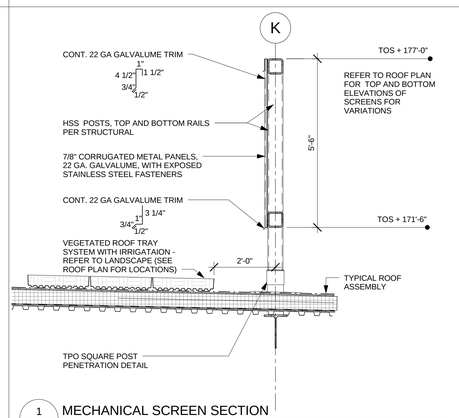

1 A8401 MECHANICAL SCREEN SECTION
Scale: 1/2" = 1'-0"

CLIENT

CENTERCAL PROPERTIES, LLC

COPYRIGHT:

Any reproduction or distribution for any purpose other than authorized by IBI Group is forbidden. Written dimensions shall have precedence over scaled dimensions. Contractors shall verify and be responsible for all dimensions and conditions on site. Any errors or omissions shall be reported to IBI Group from the dimensions and conditions shown on the drawing. Shop drawings shall be submitted to IBI Group for approval before proceeding with fabrication.

COPYRIGHT © 2016 IBI GROUP

ISSUES

NO.	ISSUANCE	STATUS	DATE

SEAL

10759 REGISTERED ARCHITECT
CRAIG ROTHENBURGER
STATE OF WASHINGTON

SUB CONSULTANT

PRIME CONSULTANT

IBI
ibigroup.com

PROJECT

The Village at Totem Lake - Building B
Kirkland, Washington

PROJECT NO:	Building B
DRAWN BY:	Author
CHKD' BY:	Checker
SCALE:	1/2" = 1'-0"
DATE:	05/26/2016

SHEET TITLE

ROOF DETAILS

BLDG	SHEET NUMBER	ISSUE
B	A8401	

C:\Users\bjan.shoieh\Documents\ATW_Totem_BldgB_A_2016_bjan.shoieh.rvt

5/26/2016 7:15:55 PM

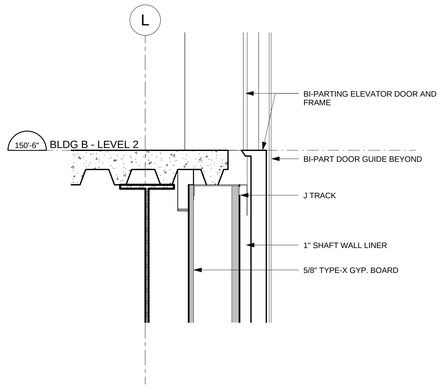

4 A8602 FREIGHT ELEVATOR SILL
Scale: 1 1/2" = 1'-0"

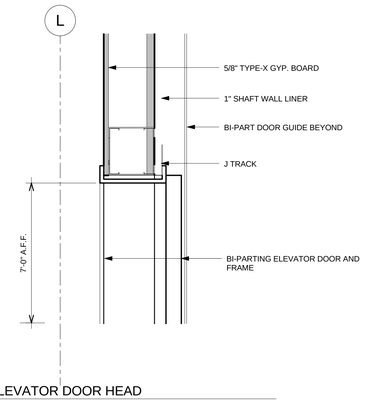

3 A8602 ELEVATOR DOOR HEAD
Scale: 1 1/2" = 1'-0"

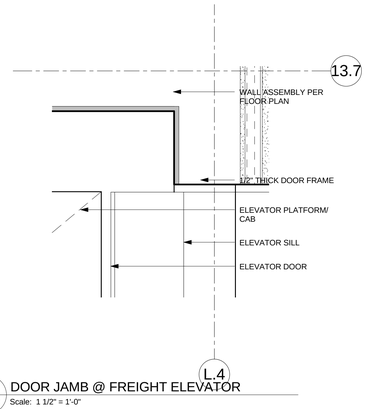

2 A8602 DOOR JAMB @ FREIGHT ELEVATOR
Scale: 1 1/2" = 1'-0"

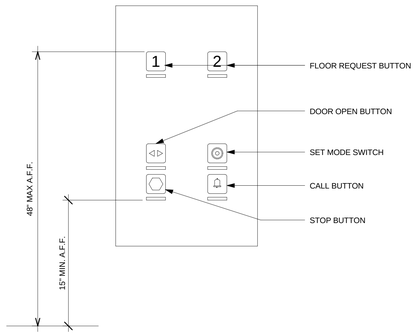

5 A8602 ELEVATOR BUTTON PANEL
Scale: 3" = 1'-0"

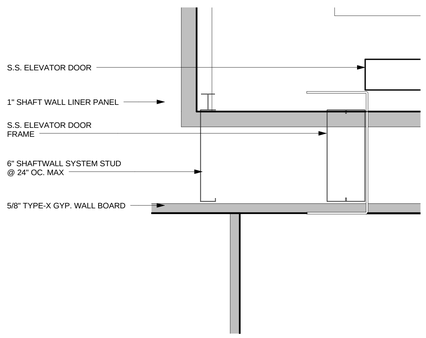

1 A8602 DOOR JAMB @ PASSENGER ELEVATOR
Scale: 3" = 1'-0"

CLIENT

CENTERCAL PROPERTIES, LLC

COPYRIGHT:

Any reproduction or distribution for any purpose other than authorized by IBI Group is forbidden. Written dimensions shall have precedence over scaled dimensions. Contractors shall verify and be responsible for all dimensions and conditions on site. Any errors or omissions shall be reported to IBI Group from the dimensions and conditions shown on the drawing. Shop drawings shall be submitted to IBI Group for approval before proceeding with fabrication.

COPYRIGHT © 2016 IBI GROUP

ISSUES

NO.	ISSUANCE	STATUS	DATE

SEAL

10759 REGISTERED ARCHITECT
CRAIG ROTHENBURGER
STATE OF WASHINGTON

SUB CONSULTANT

PRIME CONSULTANT

IBI
ibigroup.com

PROJECT
The Village at Totem Lake - Building B
Kirkland, Washington

PROJECT NO:	Building B
DRAWN BY:	Author
CHKD' BY:	Checker
SCALE:	As indicated
DATE:	05/26/2016

SHEET TITLE
ELEVATOR DETAILS

BLDG	SHEET NUMBER	ISSUE
B	A8602	

C:\Users\bjan.shoaie\Documents\ATW_Totem_B\bjgB_A_2016_bjan.shoaie.rvt

5/26/2016 7:02:39 PM

CONCRETE

1. ALL CONCRETE IS REINFORCED AND CAST_IN_PLACE UNLESS OTHERWISE NOTED.
2. ALL PHASES OF WORK PERTAINING TO THE CONCRETE CONSTRUCTION SHALL CONFORM TO THE 'BUILDING CODE REQUIREMENTS FOR REINFORCED CONCRETE, ACI 318, WITH MODIFICATIONS AS NOTED IN THE CONTRACT DOCUMENTS.
3. CONCRETE MIXING OPERATION, ETC., SHALL CONFORM TO C-94.
4. PLACEMENT OF CONCRETE SHALL CONFORM TO ACI 304 AND CONTRACT DOCUMENTS.
5. ALL STRUCTURAL CONCRETE SHALL HAVE A MINIMUM COMPRESSIVE STRENGTH AT 28 DAYS AS FOLLOWS:

LOCATION	STRENGTH	TYPE OF CONCRETE
FILL ON METAL DECK	3000 PSI	NORMAL WEIGHT
SLAB ON GRADE	3000 PSI	NORMAL WEIGHT
ALL OTHER CONCRETE	4000 PSI	NORMAL WEIGHT

6. NO MORE THAN ONE GRADE OF CONCRETE SHALL BE ON THE JOB SITE AT ANY ONE TIME.
7. PORTLAND CEMENT SHALL CONFORM TO ASTM C-150, TYPE I OR TYPE II, LOW ALKALI.
8. CONCRETE MIXES SHALL BE DESIGNED BY AN APPROVED LABORATORY. THE DESIGN SHALL BE STAMPED BY A CIVIL OR STRUCTURAL ENGINEER LICENSED IN THE STATE OF WASHINGTON AND SUBMITTED TO THE OWNER'S REPRESENTATIVE FOR REVIEW AND APPROVAL. ADMIXTURES CONTAINING CALCIUM CHLORIDE ARE NOT ALLOWED.
9. NORMAL WEIGHT CONCRETE AGGREGATES SHALL CONFORM TO ASTM C-33.
10. GROUT SHALL BE AN APPROVED NONSHRINK CEMENTIOUS GROUT CONTAINING NATURAL AGGREGATES DELIVERED TO THE JOB SITE IN FACTORY PREPACKAGED CONTAINERS REQUIRING ONLY THE ADDITION OF WATER. THE MINIMUM 28-DAY COMPRESSIVE STRENGTH SHALL BE AT LEAST 1,000 PSI HIGHER THAN THE SUPPORTING CONCRETE STRENGTH, UNLESS OTHERWISE NOTED. APPROVED GROUTS INCLUDE: CHEM REX INC'S "MASTER FLOW 928" SIKA CORPORATION'S "SIKAGROUT 212HP", BURKE COMPANY'S "NONFERROUS NON SHRINK GROUT", OR APPROVED EQUAL. GROUT SHALL BE MIXED APPLIED, AND CURED STRICTLY IN ACCORDANCE WITH THE MANUFACTURER'S PRINTED INSTRUCTIONS.
12. THE CONCRETE SLAB THICKNESS SHALL BE UNIFORM UNLESS OTHERWISE SHOWN.
13. THOROUGHLY CLEAN AND ROUGHEN ALL EXISTING CONCRETE, CONCRETE PREVIOUSLY POURED AND HARDENED AND MASONRY SURFACES TO RECEIVE NEW CONCRETE. INTERFACE SHALL BE ROUGHENED TO A FULL AMPLITUDE OF 1/4" UNLESS NOTED OTHERWISE.
14. THE FOLLOWING MINIMUM CONCRETE COVER SHALL BE PROVIDED FOR REINFORCEMENT PLACED IN CAST-IN-PLACE CONCRETE:
    - A. CONCRETE CAST AGAINST AND PERMANENTLY EXPOSED TO EARTH — 3"
    - B. FORMED CONCRETE EXPOSED TO EARTH OR WEATHER:
      - #5 BAR, W31 OR D31 WIRE, AND SMALLER — 1 1/2"
      - #6 THROUGH # 18 BARS — 2"
    - C. CONCRETE NOT EXPOSED TO WEATHER OR IN CONTACT WITH GROUND:
      - SLABS, WALLS AND JOISTS:
      - #11 BAR AND SMALLER — 1"
      - #14 AND #18 BARS — 1 1/2"
      - BEAMS, COLUMNS AND WALL JAMBS:
      - PRIMARY REINFORCEMENT, TIES, STIRRUPS, AND SPIRALS:
      - #3 THROUGH #11 — 1 1/2"
      - #14 AND #18 BARS — 2 1/2"
15. ALL REINFORCING BARS, ANCHOR BOLTS AND OTHER CONCRETE INSERTS SHALL BE WELL SECURED IN POSITION PRIOR TO PLACING CONCRETE.
16. PROVIDE SLEEVES FOR PLUMBING AND ELECTRICAL OPENINGS IN CONCRETE BEFORE PLACING. DO NOT CUT ANY REINFORCING WHICH MAY CONFLICT. CORING IN CONCRETE IS NOT PERMITTED EXCEPT AS SHOWN. NOTIFY THE STRUCTURAL ENGINEER IN ADVANCE OF CONDITIONS NOT SHOWN ON THE DRAWINGS.
17. CONDUIT OR PIPE SIZE (O.D.) SHALL NOT EXCEED ONE THIRD OF SLAB THICKNESS AND SHALL BE PLACED BETWEEN THE TOP AND BOTTOM REINFORCING, UNLESS SPECIFICALLY DETAILED OTHERWISE. CONCENTRATIONS OF CONDUITS OR PIPES SHALL BE AVOIDED EXCEPT WHERE DETAILED OPENINGS ARE PROVIDED.
18. PROJECTING CORNERS OF BEAMS, WALLS, COLUMNS, ETC., SHALL BE FORMED WITH A 3/4 IN. CHAMFER, UNLESS OTHERWISE NOTED ON ARCHITECTURAL DRAWINGS.
19. CURING COMPOUNDS USED ON CONCRETE TO RECEIVE A FINISH SHALL BE APPROVED BY THE FINISH APPLICATOR BEFORE USE.
20. THE MAXIMUM SIZE OF A SINGLE POUR FOR ANY DAY FOR ELEVATED SLABS SHALL NOT EXCEED 20,000 SQUARE FEET, AND THE RATIO OF LENGTH TO WIDTH OF THE POUR SHALL NOT EXCEED 2 TO 1 WITHOUT THE APPROVAL OF THE OWNER'S REPRESENTATIVE.

REINFORCING STEEL

1. ALL REINFORCING STEEL SHALL BE DETAILED AND PLACED IN CONFORMANCE WITH THE 'BUILDING CODE REQUIREMENTS FOR REINFORCED CONCRETE' (ACI 318) AND THE 'MANUAL OF STANDARD PRACTICE FOR REINFORCED CONCRETE CONSTRUCTION' BY THE C.R.S.I. AND THE W.C.R.S.I., OR AS MODIFIED BY THE CONSTRUCTION DOCUMENTS.
2. ALL REINFORCING STEEL SHALL BE ASTM A615 GR 60, TYPICAL UNO. ASTM A706 GR 60 MAY BE USED AS ALTERNATE TO ASTM A615. WELDED REINFORCING, IF USED, SHALL BE ASTM A 706 OR 60.
3. MECHANICAL COUPLERS: LENTON THREADED COUPLERS BY ERICO, ICC #3967, XTENDER BY HEADED REINFORCEMENT CORPORATION, ICC #2764 OR BAR-LOCK BY DAYTON SUPERIOR CORP, ICC #2495. COUPLERS FOR BEAM AND SLAB BARS AT FORMED CONSTRUCTION JOINTS MAY BE LENTON FORM SAVERS BY ERICO, ICC #3967.
4. WELDING OF REINFORCEMENT SHALL BE WITH LOW HYDROGEN E90XX ELECTRODES FOR WELDING ASTM A615 BARS AND E80XX ELECTRODES FOR WELDING ASTM A706 BARS. ALL WELDING SHALL BE IN CONFORMANCE WITH AMERICAN WELDING SOCIETY, AWS-D1.4. ONLY WELDERS SPECIFICALLY CERTIFIED FOR REINFORCING STEEL AND IN ACCORDANCE WITH AWS D1.4 SHALL PERFORM WELDING OF REINFORCING STEEL.
5. ALL REINFORCING BAR BENDS SHALL BE MADE COLD.
6. REINFORCING SPLICES SHALL ONLY BE MADE AS INDICATED ON THE DRAWINGS.
7. DOWELS BETWEEN FOOTINGS AND WALLS OR COLUMNS SHALL BE THE SAME GRADE, SIZE AND SPACING AS THE VERTICAL REINFORCING, RESPECTIVELY, UNLESS NOTED OTHERWISE.
8. DOWELS BETWEEN SLABS AND WALLS OR COLUMNS SHALL BE THE SAME GRADE, SIZE AND SPACING AS THE VERTICAL REINFORCING, RESPECTIVELY, UNLESS NOTED OTHERWISE.
9. ALL BARS SHALL BE MARKED SO THEIR IDENTIFICATION CAN BE MADE WHEN THE FINAL IN-PLACE INSPECTION IS MADE.
10. CONTRACTOR SHALL PROVIDE FOR AN ALLOWABLE OF 5 TONS OF REINFORCING TO BE FABRICATED AND PLACED DURING PROGRESS OF WORK AS MAY BE DIRECTED BY THE STRUCTURAL ENGINEER. THE UNUSED PORTION SHALL BE CREDITED TO THE OWNER AT THE COMPLETION OF THE CONCRETE WORK.

FOUNDATIONS AND SITE WORK

1. THE DESIGN OF THE FOUNDATION SYSTEM IS BASED UPON THE CRITERIA AND RECOMMENDATIONS CONTAINED IN THE GEOTECHNICAL INVESTIGATION REPORT BY GEODESIGN, INC. DATED MARCH 2, 2016 AND ALL SUBSEQUENT ADDENDA. COPIES ARE AVAILABLE FOR REVIEW AT THE ARCHITECT'S OFFICE.
2. FOOTING DESIGN BASED ON ALLOWABLE SOIL PRESSURE OF 5000 PSF FOR DEAD AND LIVE LOADS, AND 7500 PSF FOR SHORT TERM LOADS INCLUDING WIND OR SEISMIC LOADS. BOTTOM OF FOOTINGS TO BE A MINIMUM OF 1'-6" BELOW LOWEST ADJACENT FINISHED FLOOR OR GRADE.
3. THE GEOTECHNICAL INVESTIGATION REPORT AND ITS RECOMMENDATIONS SHALL BE FOLLOWED AND SHALL BE CONSIDERED MINIMUM REQUIREMENTS UNLESS MORE STRINGENT REQUIREMENTS ARE PRESENTED IN THE CONSTRUCTION DOCUMENTS.
4. THE CONTRACTOR IS SOLELY RESPONSIBLE FOR EXCAVATION PROCEDURES INCLUDING LAGGING, SHORING, UNDERPINNING AND PROTECTION OF EXISTING CONSTRUCTION.
5. CONTRACTOR SHALL PROVIDE DE-WATERING OF EXCAVATIONS FROM SURFACE WATER, GROUND WATER OR SEEPAGE. REMOVE LOOSE SOIL AND STANDING WATER FROM FOUNDATION EXCAVATIONS PRIOR TO PLACING CONCRETE.
6. EXCAVATION AND COMPACTING IF REQUIRED SHALL BE APPROVED BY THE GOVERNING AGENCY AND THE GEOTECHNICAL ENGINEER PRIOR TO PLACING THE CONCRETE AND REINFORCING. THE GEOTECHNICAL ENGINEER SHALL SUBMIT LETTER OF COMPLIANCE TO THE OWNER'S REPRESENTATIVE.
7. ALL EXCAVATIONS SHALL BE PROPERLY BACKFILLED. DO NOT PLACE BACKFILL BEHIND RETAINING WALLS BEFORE WALLS HAVE ATTAINED FULL DESIGN STRENGTH CONTRACTOR SHALL BRACE OR PROTECT ALL BUILDING AND PIT WALLS BELOW GRADE FROM LATERAL LOADS UNTIL ATTACHING FLOORS ARE COMPLETELY IN PLACE AND HAVE ATTAINED FULL STRENGTH. CONTRACTOR SHALL PROVIDE FOR DESIGN, PERMITS AND INSTALLATION OF SUCH BRACING.
8. FOOTINGS SHALL BE PLACED AND ESTIMATED ACCORDING TO DEPTHS SHOWN ON DRAWINGS. SHOULD SOIL ENCOUNTERED AT THESE DEPTHS NOT BE APPROVED BY THE FOUNDATION ENGINEER, FOOTING ELEVATIONS SHALL BE ALTERED AS REQUIRED.
9. FOOTING BACKFILL AND UTILITY TRENCH BACKFILL WITHIN BUILDING AREA SHALL BE MECHANICALLY COMPACTED IN LAYERS IN ACCORDANCE WITH SOIL REPORT. FLOODING IS NOT BE PERMITTED.
10. LOCATE AND PROTECT EXISTING UTILITIES TO REMAIN DURING AND/OR AFTER CONSTRUCTION.
11. ALL ABANDONED FOOTINGS, UTILITIES, ETC., THAT INTERFERE WITH NEW CONSTRUCTION SHALL BE REMOVED EXCEPT THAT THE EXISTING TIMBER PILES SHALL REMAIN IN PLACE.
12. ALL EARTHWORK SHALL BE DONE IN ACCORDANCE WITH SOILS REPORT RECOMMENDATIONS.

DEFERRED DESIGN APPROVAL ITEMS AND REQUIREMENTS

1. THE GENERAL CONTRACTOR SHALL PREPARE PLANS, DETAILS, AND CALCULATIONS FOR ALL "DEFERRED DESIGN APPROVAL" ITEMS (SEE NOTE 4) TO THE BUILDING DEPARTMENT, THE ARCHITECT, AND THE STRUCTURAL ENGINEER, FOR REVIEW AND/OR APPROVAL PRIOR ALL "DEFERRED DESIGN APPROVAL" TO FABRICATION.
2. SHOP DRAWINGS AND CALCULATIONS AS NECESSARY FOR "DEFERRED DESIGN APPROVAL" ITEMS SHALL BOTH BE SIGNED BY A PROFESSIONAL ENGINEER LICENSED IN WASHINGTON. THIS ENGINEER SHALL BE RESPONSIBLE FOR SUBMITTING TO, GAINING REVIEW/ACCEPTANCE FROM, AND MEETING ANY OTHER REQUIREMENTS OF THE BUILDING DEPARTMENT AND THE ARCHITECT.
3. STRUCTURAL BEAMS, GIRDERS, AND COLUMNS HAVE NOT BEEN DESIGNED FOR ANY ECCENTRIC OR TORSIONAL LOADS UNLESS SPECIFICALLY NOTED ON PLAN, THEREFORE IT IS THE RESPONSIBILITY OF THE CONTRACTOR TO DESIGN AND PROVIDE CONNECTIONS AND RELATED ELEMENTS (SUCH AS KICKERS) IN A MANNER THAT LOADS THE BASE BUILDING STRUCTURAL ELEMENTS CONCENTRICALLY.
4. "DEFERRED DESIGN APPROVAL "ITEMS/ELEMENTS (AS DESCRIBED BELOW) SHALL BE DESIGNED BY OTHERS, AND THE GENERAL CONTRACTOR SHALL COORDINATE WITH ALL OTHER TRADES AND THE ARCHITECT. JOHN A. MARTIN & ASSOCIATES, INC. HAS NOT DESIGNED ANY OF THESE "DEFFERED DESIGN APPROVAL" ITEMS. DESIGN SHALL INCLUDE THE DESIGN OF THE ELEMENTS AND THEIR CONNECTIONS TO THE BASE BUILDING STRUCTURE. "DEFERRED DESIGN APPROVAL" ITEMS ON THIS PROJECT ARE AS FOLLOWS:
    - A. ALL CURTAIN WALL, WINDOW, LOUVER, AND GLAZING SYSTEMS.
    - B. ALL HANDRAILS, GUARDRAILS, STAIR FRAMING, LANDINGS, AND ANY RELATED SUPPORT THAT IS NOT SPECIFICALLY SHOWN AND DETAILED ON THE STRUCTURAL DRAWINGS.
    - C. SUPPORTS AND CONNECTIONS FOR PIPES, SPRINKLER, AND WASTE LINES, DUCTS, CONDUITS, SUSPENDED CEILINGS, LIGHTS, MECHANICAL AND ELECTRICAL EQUIPMENT, INCLUDING EQUIPMENT PEDESTAL FRAMING TO HOLD EQUIPMENT ABOVE STRUCTURAL DECKS AND EQUIPMENT ANCHORAGE TO THE BASE BUILDING STRUCTURE.
    - D. SUPPORTS AND CONNECTIONS FOR METAL STUD FRAMING, SOFFITS, AND ANY OTHER ARCHITECTURAL ELEMENTS SUPPORTED BY METAL STUDS.
    - E. ANY STRUCTURE THAT IS NOT SHOWN ON THE STRUCTURAL DRAWINGS BUT IS REQUIRED BY OTHER DISCIPLINES, SUCH AS ARCHITECTURAL, MECHANICAL, ELECTRICAL, LANDSCAPE, ETC.
    - F. ELEVATORS, INCLUDING ELEVATOR MACHINE BEAMS, GUIDERAILS, AND THEIT ASSOCIATED CONNECTIONS.
    - G. METAL GRATING NOT CALLED OUT ON PLANS.
    - H. WINDOW WASHING SYSTEMS AS SPECIFIED ON DRAWINGS BY OTHERS.
5. DOCUMENTS FOR "DEFERRED DESIGN APPROVAL" ITEMS SHALL BE SUBMITTED TO THE ARCHITECT AND BASE BUILDING ENGINEER OF RECORD, WHO SHALL REVIEW THEM AND STAMP THEM WITH A NOTE INDICATING THE DEFERRED APPROVAL SUBMITTAL DOCUMENTS HAVE BEEN REVIEWED AND FOUND TO BE IN CONFORMANCE WITH THE DESIGN CONCEPT OF THE PROJECT AND IN GENERAL COMPLIANCE WITH THE INFORMATION GIVEN IN THE CONTRACT DOCUMENTS. THE BASE BUILDING STRUCTURAL ENGINEER SHALL REVIEW THE DOCUMENTS AND STAMP THEM INDICATING THE DOCUMENTS HAVE BEEN REVIEWED FOR LOADS AS THEY AFFECT THE BASE BUILDING. THE CONTRACTOR SHALL BE RESPONSIBLE FOR FORWARDING THE REVIEWED SUBMITTAL DOCUMENTS TO THE BUILDING OFFICIAL. RESPONSIBILITY FOR THE DESIGN SHOWN ON THESE DOCUMENTS AND FOR OBTAINING APPROVAL FROM THE BUILDING OFFICIAL RESTS WITH THE INDIVIDUAL WHOSE PROFESSIONAL SEAL APPEARS THEREON. DEFERRED DESIGN APPROVAL ITEMS SHALL NOT BE INSTALLED UNTIL ALL NECESSARY REVIEWS AND APPROVALS HAVE BEEN OBTAINED FROM THE DESIGN TEAM AND THE BUILDING OFFICIAL.

GENERAL CONTINUED

21. STRUCTURAL OBSERVATIONS PERFORMED BY THE STRUCTURAL ENGINEER DURING CONSTRUCTION ARE NOT THE REQUIRED CONTINUOUS AND SPECIAL INSPECTION SERVICES AND DO NOT WAIVE THE RESPONSIBILITY FOR THE INSPECTIONS REQUIRED OF THE BUILDING INSPECTOR OR THE DEPUTY INSPECTOR. OBSERVATIONS ALSO DO NOT GUARANTEE CONTRACTOR'S PERFORMANCE AND SHALL NOT BE CONSIDERED AS SUPERVISION OF CONSTRUCTION.
22. CONTRACTOR SHALL REVIEW SHOP DRAWINGS FOR COMPLETENESS AND COMPLIANCE WITH CONTRACT DOCUMENTS AND SHALL STAMP SHOP DRAWINGS PRIOR TO SUBMISSION TO THE OWNER'S REPRESENTATIVE.
23. ARCHITECT'S / ENGINEER'S REVIEW OF THE SHOP DRAWINGS SHALL NOT BE CONSTRUED AS AN AUTHORIZATION TO DEVIATE FROM CONTRACT DOCUMENTS.
24. SHOP DRAWINGS WILL NOT BE PROCESSED DUE TO INCOMPLETENESS, LACK OF COORDINATION WITH RELEVANT PORTION OF CONTRACT DOCUMENTS, LACK OF CALCULATIONS IF REQUIRED AND WHERE DEVIATIONS, MODIFICATIONS AND SUBSTITUTIONS ARE INDICATED WITHOUT PRIOR WRITTEN APPROVAL FROM THE OWNER'S REPRESENTATIVE.
25. ALLOW SEVEN WORKING DAYS FOR PROCESSING SHOP DRAWINGS OTHER THAN STRUCTURAL STEEL & DESIGN-BUILD ITEMS AFTER RECEIPT BY THE STRUCTURAL ENGINEER. ALLOW FOURTEEN WORKING DAYS FOR PROCESSING STRUCTURAL STEEL & DESIGN-BUILD ITEMS SHOP DRAWINGS. SHOP DRAWINGS AND SUBMITTALS WILL BE REVIEWED A MAXIMUM OF TWO TIMES.
26. THE LATERAL SYSTEM OF THE STRUCTURE IS DESIGNED WITH LATERAL RESTRAINT AT THE GROUND FLOOR. STRUCTURAL FRAMES ARE NOT LATERALLY SELF SUPPORTING UNTIL THE ENTIRE DESIGN LATERAL RESTRAINT FLOOR AND STRUCTURAL WALLS BELOW ARE IN PLACE.
27. DO NOT SPLICE STRUCTURAL MEMBERS UNLESS SPECIFICALLY DETAILED AN INDICATED IN THIS SET OF DRAWINGS. DO NOT PLACE OPENINGS, POCKETS, ETC. IN STRUCTURAL MEMBERS UNLESS SPECIFICALLY DETAILED AND INDICATED IN THIS SET OF STRUCTURAL DRAWINGS. NOTIFY THE STRUCTURAL ENGINEER IF DRAWINGS BY OTHERS REQUIRE MODIFICATIONS TO STRUCTURAL MEMBERS AS SHOWN IN THIS SET OF STRUCTURAL DRAWINGS PRIOR TO PROCEEDING WITH THE WORK.
28. SAFETY MEASURES: CONTRACTOR AGREES THAT HE SHALL ASSUME SOLE AND COMPLETE RESPONSIBILITY FOR JOB SITE CONDITIONS DURING THE COURSE OF CONSTRUCTION OF THIS PROJECT, INCLUDING SAFETY OF ALL PERSONS AND PROPERTY, AND FOR ALL NECESSARY INDEPENDENT ENGINEERING REVIEWS OF THESE CONDITIONS, REQUIREMENTS SHALL APPLY CONTINUOUSLY AND NOT BE LIMITED TO NORMAL WORKING HOURS.
29. CONTRACTOR ACKNOWLEDGES THAT HE HAS THOROUGHLY FAMILIARIZED HIMSELF WITH THE BUILDING SITE CONDITIONS, GRADES, ETC., WITH THE DRAWINGS AND SPECIFICATIONS, WITH THE DELIVERY FACULTIES AND ALL OTHER MATTERS AND CONDITIONS WHICH MAY AFFECT THE OPERATION AND COMPLETION OF THE WORK AND ASSUMES ALL RISKS THEREFROM.
30. CONTRACTOR SHALL SUBMIT THE FOLLOWING DOCUMENTS TO THE BUILDING DEPARTMENT OR THEIR RECORD:
    - A. FASTENER INSTALLATION PROCEDURES
    - B. WELDING PROCEDURES AND SPECIFICATIONS
    - C. WELDING PERFORMANCE QUALIFICATION RECORDS
    - D. INSPECTOR QUALIFICATIONS
    - E. CONTRACTOR'S QUALITY CONTROL PLAN
31. STANDARD TOLERANCES SHALL BE BASED ON THE REQUIREMENTS OF THE AISC CODE OF STANDARD PRACTICE AND ACI 117, STANDARD SPECIFICATIONS FOR TOLERANCE FOR CONCRETE CONSTRUCTION AND MATERIALS.
32. DESIGN LOADS:
    - A. DEAD LOADS: CONSIST OF BUILDING SELF-WEIGHT PLUS SUPERIMPOSED DEAD LOADS. REFER TO COMPLETE SET OF DRAWINGS FOR DETERMINING DEAD LOADS
    - B. LIVE LOADS:

AREA	DESIGN LIVE LOAD	REMARK
RETAIL	125 PSF + 15 PSF PARTITIONS	UNREDUCIBLE
STAIRS,EXITS	100 PSF	UNREDUCIBLE
ROOF	20 PSF	REDUCIBLE

C. SEISMIC DESIGN LOADS:

S_S	= 1.254
S_1	= 0.483
S_{DS}	= 0.836
S_{D1}	= 0.489
SITE CLASS	= D
RESPONSE MODIFICATION FACTOR, R	= 8.0
DISPLACEMENT AMPLIFICATION FACTOR, C_d	= 5.5
OVERSTRENGTH FACTOR, Ω_0	= 3.0
SEISMIC RESPONSE COEFFICIENT, C_S	= 0.085 (ULTIMATE)
SEISMIC DESIGN CATEGORY	= D
RISK CATEGORY	= II
SEISMIC IMPORTANCE FACTOR I_e	= 1.0
ANALYSIS PROCEDURE USED	= MODAL RESPONSE (LINEAR DYNAMIC)
SEISMIC BASE SHEAR (APPROXIMATE)	= 795 K

D. WIND DESIGN LOADS:

BASIC WIND SPEED (3 SEC. GUST)	= 110 MPH
WIND IMPORTANCE FACTOR, I_w	= 1.0
EXPOSURE TYPE	= B
RISK CATEGORY	= II

1

E. SNOW DESIGN LOADS:

ROOF SNOW LOAD	= 25 PSF

STRUCTURAL OBSERVATION

1. PERIODIC STRUCTURAL OBSERVATION WILL BE PROVIDED BY JOHN A. MARTIN & ASSOCIATES INC., STRUCTURAL ENGINEERS, PER SECTION 1704 OF THE INTERNATIONAL BUILDING CODE AND ALL APPLICABLE AMENDMENTS, FOR THE WORK INDICATED BELOW. CONTRACTOR SHALL NOTIFY ENGINEER 72 HOURS BEFORE REQUIRED OBSERVATIONS. DELINQUENT NOTIFICATION MAY REQUIRE DEMOLITION OF COVERING MATERIAL TO FACILITATE OBSERVATION.
    - PLACING OF CONCRETE
    - PLACING OF REINFORCING
    - PLACING OF STRUCTURAL STEEL
    - PLACING OF METAL DECK
    - PLACING OF ANCHOR BOLTS
2. STRUCTURAL OBSERVATIONS PERFORMED BY JOHN A. MARTIN & ASSOCIATES CONSIST ON THE VISUAL OBSERVATION OF THE MAJOR ELEMENTS AND CONNECTIONS OF THE STRUCTURAL SYSTEM AT SIGNIFICANT CONSTRUCTION STAGES AND THE COMPLETED STRUCTURE FOR GENERAL CONFORMANCE TO THE APPROVED PLANS AND SPECIFICATIONS. STRUCTURAL OBSERVATION DOES NOT WAIVE THE REQUIREMENT/RESPONSIBILITY FOR THE INSPECTIONS REQUIRED OF THE BUILDING INSPECTOR OR THE SPECIAL INSPECTOR.
3. THE ENGINEER OF RECORD SHALL DEVELOP ALL CHANGES RELATING TO THE STRUCTURAL SYSTEMS. THE BUILDING DEPARTMENT SHALL REVIEW AND APPROVE ALL CHANGES TO THE APPROVED PLANS AND SPECIFICATIONS.

GENERAL

1. THE PROJECT SPECIFICATIONS FORM A PART OF THESE GENERAL NOTES.
2. THE CONTRACTOR SHALL VERIFY ALL DIMENSIONS PRIOR TO CONSTRUCTION. THE OWNER'S REPRESENTATIVE SHALL BE NOTIFIED OF ANY DISCREPANCIES OR INCONSISTENCIES.
3. INFORMATION SHOWN ON THE DRAWINGS RELATED TO EXISTING CONDITIONS REPRESENTS THE PRESENT KNOWLEDGE, BUT WITHOUT GUARANTEE OF ACCURACY. REPORT CONDITIONS THAT CONFLICT WITH THE CONTRACT DOCUMENTS TO THE OWNER'S REPRESENTATIVE. DO NOT DEVIATE FROM THE CONTRACT DOCUMENTS WITHOUT WRITTEN DIRECTION FROM THE OWNER'S REPRESENTATIVE.
4. DIMENSIONS SHALL TAKE PRECEDENCE OVER SCALED DRAWINGS. DRAWINGS SHALL NOT BE SCALED.
5. DETAILS IN SHEETS TITLED 'TYPICAL DETAILS', TYPICAL DETAILS AND GENERAL NOTES APPLY TO ALL PARTS OF THE WORK, EXCEPT WHERE SPECIFICALLY DETAILED OR UNLESS NOTED OTHERWISE. THESE DETAILS ARE NOT SPECIFICALLY REFERENCED WHERE THEY OCCUR.
6. NOTES AND DETAILS ON DRAWINGS SHALL TAKE PRECEDENCE OVER GENERAL NOTES AND TYPICAL DETAILS. WHERE NOTES AND DETAILS ON DRAWINGS AND THESE GENERAL NOTES AND TYPICAL DETAILS ARE IN CONFLICT WITH THE PROJECT SPECIFICATIONS THE MOST STRINGENT SHALL APPLY. CONDITIONS NOT SPECIFICALLY SHOWN SHALL BE CONSTRUCTED AS SHOWN FOR SIMILAR WORK.
7. ALL WORK SHALL CONFORM TO THE STANDARDS OF THE FOLLOWING:

   INTERNATIONAL BUILDING CODE, 2012 AND ANY OTHER REGULATING AGENCIES WHICH HAVE AUTHORITY OVER ANY PORTION OF THE WORK, INCLUDING BUT NOT LIMITED TO OSHA, DIVISION OF OCCUPATIONAL SAFETY AND HEALTH, AND THOSE CODES AND STANDARDS LISTED IN THE CONTRACT DOCUMENTS.
8. SPECIFICATIONS, CODES, AND STANDARDS NOTED IN THE CONTRACT DOCUMENTS SHALL BE OF THE LATEST APPROVED ISSUE, INCLUDING SUPPLEMENTS, UNLESS OTHERWISE NOTED. MATERIAL SPECIFICATIONS SHALL COMPLY WITH ASTM REFERENCED STANDARDS LATEST EDITION.
9. MANUFACTURED MATERIALS SHALL BE APPROVED BY THE CHECKING AGENCY PRIOR TO THEIR USE. ALL REQUIREMENTS OF THOSE APPROVALS SHALL BE FOLLOWED
10. SEE ARCHITECTURAL DRAWINGS FOR THE FOLLOWING:
    - A. SIZE AND LOCATION OF ALL DOOR AND WINDOW OPENINGS.
    - B. SIZE AND LOCATION OF ALL NON-BEARING PARTITIONS.
    - C. SIZE AND LOCATION OF ALL CONCRETE CURBS, FLOOR DRAINS, SLOPES, DEPRESSED AREAS, CHANGES IN LEVEL, CHAMFERS, GROOVES, INSERTS, ETC.
    - D. EXTERIOR WALL SYSTEM.
    - E. SIZE AND LOCATION OF ALL FLOOR AND ROOF OPENINGS.
    - F. DIMENSIONS NOT SHOWN ON STRUCTURAL DRAWINGS.
11. SEE MECHANICAL, PLUMBING AND ELECTRICAL DRAWINGS FOR THE FOLLOWING:
    - A. PIPE RUNS, SLEEVES, HANGERS, TRENCHES, WALL, ROOF AND FLOOR OPENINGS, ETC., NOT SHOWN OR NOTED.
    - B. ELECTRICAL CONDUIT RUNS, BOXES, OUTLETS IN WALLS AND SLABS.
    - C. ANCHORAGE AND BRACING FOR ELECTRICAL, MECHANICAL OR PLUMBING EQUIPMENT TO THE STRUCTURE.
    - D. ANCHOR BOLTS FOR EQUIPMENT MOUNTS.
    - E. SIZE, WEIGHT, AND LOCATION OF MACHINE AND EQUIPMENT BASES.
12. OPENINGS, POCKETS, ETC. SHALL NOT BE PLACED IN STRUCTURAL MEMBERS UNLESS SPECIFICALLY DETAILED ON THE STRUCTURAL DRAWINGS. NOTIFY THE STRUCTURAL ENGINEER OF RECORD WHEN DRAWINGS BY OTHERS SHOW OPENINGS, POCKETS, ETC., NOT SHOWN ON THE STRUCTURAL DRAWINGS, BUT WHICH ARE LOCATED IN STRUCTURAL MEMBERS.
13. HANDRAILS, CLADDING SYSTEMS, METAL STUD FRAMING, MEP EQUIPMENT AND PIPING, ANCHORAGE/BRACING AND ANY OTHER DESIGN-BUILD ELEMENTS, WHEN NOT SPECIFICALLY DETAILED ON THE STRUCTURAL DRAWINGS, SHALL BE THE DESIGN RESPONSIBILITY OF THE CONTRACTOR AND MAY BE SUPPORTED BY THE PRIMARY STRUCTURE. CONTRACTOR SHALL PROVIDE AND INSTALL ALL ANCILLARY MEMBERS INCLUDING BUT NOT LIMITED TO BEAMS, COLUMNS, POSTS, FOOTINGS, STIFFENERS, GUSSETS, KICKERS, BRACES, ETC., AND THE ATTENDANT CONNECTIONS, AS REQUIRED BY THE STRUCTURAL ENGINEER OF RECORD, TO SUPPORT LOADS IMPOSED BY THE STAIR FRAMING AND DESIGN-BUILD ELEMENTS ON THE PRIMARY STRUCTURE. DESIGN AND DETAILING OF THESE ELEMENTS SHALL BE DEVELOPED AND STAMPED BY A LICENSED STRUCTURAL ENGINEER IN THE STATE OF WASHINGTON. CONTRACTOR SHALL SUBMIT THE CALCULATIONS, DRAWINGS AND DESIGN TO THE STRUCTURAL ENGINEER OF RECORD FOR REVIEW AND TO THE GOVERNING AGENCY FOR PERMITTING AND APPROVAL PRIOR TO STARTING FABRICATION CONTRACTOR SHALL OBTAIN ALL PERTINENT PERMITS PRIOR TO STARTING FABRICATION. DESIGN-BUILD ELEMENTS SHALL BE DESIGNED TO AVOID TORSIONAL LOADS INTO THE PRIMARY STRUCTURE.
14. CONTRACTOR SHALL CAREFULLY REVIEW THE DRAWINGS TO IDENTIFY THE EXTENT OF THE SCOPE OF WORK. VISIT THE SITE TO RELATE THE SCOPE OF WORK TO EXISTING CONDITIONS AND DETERMINE THE EXTENT TO WHICH THOSE CONDITIONS AND PHYSICAL SURROUNDINGS WILL IMPACT THE WORK.
15. THE CONTRACTOR SHALL RESOLVE ANY CONFLICTS ON THE CONSTRUCTION DOCUMENTS WITH THE OWNER'S REPRESENTATIVE BEFORE PROCEEDING WITH THE WORK.
16. UNLESS NOTED OTHERWISE, COLUMNS, WALLS, BEAMS, FOOTINGS, ETC, ARE CENTERED AT GRIDLINES. WHERE BEAM TO BEAM SPACING IS NOT SHOWN, BEAM SHALL BE EQUALLY SPACED BETWEEN GRIDLINES.
17. ANY DEVIATION FROM THE APPROVED SET OF STRUCTURAL DRAWINGS SHALL BE SUBMITTED TO THE OWNER'S REPRESENTATIVE FOR REVIEW/APPROVAL BEFORE PROCEEDING WITH THE WORK. SUBSTITUTIONS OF PRODUCTS OR MATERIALS SPECIFIED ON THE CONSTRUCTION DOCUMENTS ARE NOT ALLOWED.
18. THE CONTRACT DOCUMENTS REPRESENT THE FINISHED STRUCTURE. THEY DO NOT INDICATE THE METHOD OF CONSTRUCTION. THE CONTRACTOR SHALL PROVIDE MEANS, METHOD, TECHNIQUES, SEQUENCE AND PROCEDURE OF CONSTRUCTION AS REQUIRED. SITE VISITS PERFORMED BY THE OWNER'S REPRESENTATIVE DO NOT INCLUDE INSPECTIONS OF MEANS AND METHODS OF CONSTRUCTION PERFORMED BY CONTRACTOR.
19. THE CONTRACTOR SHALL PROVIDE ALL NECESSARY SHORES, BRACES AND GUYS REQUIRED TO SUPPORT ALL LOADS TO WHICH THE BUILDING STRUCTURE AND COMPONENTS, SOILS, OTHER STRUCTURES AND UTILITIES MAY BE SUBJECTED DURING CONSTRUCTION. SHORING SYSTEMS SHALL BE DESIGNED AND STAMPED BY A CIVIL OR STRUCTURAL ENGINEER LICENSED IN THE STATE OF WASHINGTON. VISITS TO THE SITE BY THE SEOR WILL NOT INCLUDE OBSERVATION OF THE ABOVE NOTED ITEMS.
20. CONSTRUCTION MATERIALS SHALL BE SPREAD OUT IF PLACED ON FRAMED FLOORS OR ROOFS. LOAD SHALL NOT EXCEED THE DESIGN LIVE LOAD PER SQUARE FOOT SPECIFIED ON THIS SET OF DRAWINGS. PROVIDE ADEQUATE SHORING AND/OR BRACING WHERE STRUCTURE HAS NOT ATTAINED DESIGN STRENGTH OR WHERE OVERLOAD IS ANTICIPATED.

SECONDARY STEEL SUBMITTAL

THIS SUBMITTAL REPRESENTS A "SECONDARY STEEL ONLY" PACKAGE WHICH INCLUDES THE FOLLOWING:
1. FRAMING AROUND OPENINGS AND BELOW IDENTIFIED EQUIPMENT KNOWN AT THIS TIME.
2. ROOF SCREEN FRAMING MEMBERS (GIRTS AND POSTS)
3. EDGE OF SLAB SUPPORT

THIS SUBMITTAL EXCLUDES SECONDARY STEEL FOR CANOPIES AND ELEVATOR GUIDE RAIL SUPPORTS, AS THOSE ARE BEING DEVELOPED AT THIS TIME BY DESIGN TEAM. PRIMARY STEEL ELEMENTS MAY BE IMPACTED BY THE COMPLETION OF THE SECONDARY STEEL ELEMENTS, WHICH IS FORTHCOMING. IF ANY CHANGES TO THE PRIMARY STEEL ARE MADE, THOSE ITEMS WILL BE IDENTIFIED AND CLOUDED FOR PRICING UPDATES. THIS IS NOT A SUBMITTAL FOR ISSUANCE TO THE CITY BUILDING DEPARTMENT. IT IS FOR STEEL PRICING ONLY. NO ORDERING OF STEEL SHOULD BE MAKE UNITL FINAL DESIGN IS CONFIRMED BY JAMA.

CLIENT

CENTERCAL PROPERTIES, LLC

COPYRIGHT:

Any reproduction or distribution for any purpose other than authorized by IBI Group is forbidden. Written dimensions shall have precedence over scaled dimensions. Contractors shall verify and be responsible for all dimensions and conditions on the job and IBI Group shall be informed of any variations from the dimensions and conditions shown on the drawing. Shop drawings shall be submitted to IBI Group for approval before proceeding with fabrication.

COPYRIGHT © 2016 IBI GROUP

ISSUES

NO.	ISSUANCE	STATUS	DATE
1	STRUCTURAL ADDENDUM 1		05/25/16

SEAL

BARRY SCHINDLER
STATE OF WASHINGTON
21669
REGISTERED PROFESSIONAL ENGINEER
EXPIRES

SUB CONSULTANT

MARTIN & associates
JOHN A. MARTIN & ASSOCIATES
Structural Engineers
950 S. Grand Avenue
Los Angeles, Calif. 90015
Phone (213) 483-6490
Fax (213) 483-3084
J14261

PRIME CONSULTANT

IBI GROUP
18401 Von Karman Avenue, Suite 110
Irvine, CA 92612 United States
tel +1 949 833 5588 ext 146 fax +1 949 833 5511
ibigroup.com

PROJECT

The Village at Totem Lake - Building B
Kirkland, Washington

PROJECT NO:	J14261
DRAWN BY:	Author
CHKD' BY:	Checker
SCALE:	3/4" = 1'-0"
DATE:	05/25/16

SHEET TITLE

GENERAL NOTES

BLDG	SHEET NUMBER	ISSUE
B	S0001	

C:\Users\bkirton\Documents\ATW_Totem_BldgB_S_2016_bkirton.rvt
5/26/2016 12:53:55 PM

METAL DECK

1. THE STEEL DECKING SHALL BE OF TYPE AND GAUGE AS CALLED FOR ON THE DRAWINGS MANUFACTURED BY ASC PROFILES, INC., ESR-1414, VERCO MANUFACTURING COMPANY, ICC-1735 OR APPROVED EQUAL. DECKING AND ALL ACCESSORIES SHALL BE FORMED FROM STEEL SHEETS HAVING A MINIMUM YIELD STRENGTH OF 40,000 PSI FOR ROOF DECK CONFIGURATIONS AND 50,000 PSI FOR FORMLOCK DECK CONFIGURATIONS, AND CONFORMING TO ASTM A-653. THE STEEL SHALL BE ZINC-COATED CONFORMING TO ASTM A525, MINIMUMN CLASS G30. DECK UNITS SHALL BE CONTINUOUS OVER THREE OR MORE SPANS WHERE POSSIBLE.

2. MINIMUM BEARING OF DECKING ON SUPPORTS SHALL BE 2 INCHES. SHEETS SHALL BE ATTACHED TO ALL SUPPORTING STEEL MEMBERS BY WELDING AS INDICATED ON DRAWINGS AND IN ACCORDANCE WITH MANUFACTURER'S RECOMMENDATIONS. UPON COMPLETION OF ERECTION, ALL WELDS IN EXPOSED DECK AREAS SHALL HAVE TOUCH-UP, DE-SLAG, CLEAN AND PRIME WITH A ZINC RICH PRIMER. DECK WELDING SHALL BE AS NOTED ON PLANS. WHERE NO WELDING IS NOTED, THE SIDE LAP OF EACH PANEL SHALL BE FASTENED BY 1 INCH LONG FILLET WELDS AT 3 FEET ON CENTER MAXIMUM, OR BUTTON PUNCHED AT 18 INCHES ON CENTER.

3. SEE DRAWINGS FOR DETAIL OF REINFORCING OF DECK OPENINGS. SEE ARCHITECTURAL, MECHANICAL, ELECTRICAL DRAWINGS, ETC., FOR SIZE AND LOCATION F REQUIRED OPENINGS.

4. ALL WELDING OF STEEL DECK SHALL BE PERFORMED BY LIGHT GAUGE WELDERS CERTIFIED BY THE GOVERNING JURISDICTION.

5. HANGERS SUPPORTED BY METAL DECKING ONLY OR METAL DECKING WITH INSULATING FILL SHALL BE ATTACHED TO STEEL BARS, 3/8" ROUND X 12" OR 1/8" x 1 1/2" x 12" FLAT, PLACED PERPENDICULAR TO FLUTES. ONLY LIGHT DUCTWORK (12" X 16" MAX.), PIPING (1 1/2" ROUND PIPING MAX), OR CEILINGS MAY BE HUNG FROM SUCH INSTALLATIONS. HANGERS MUST BE TWO FLUTES APART WHERE THEY OCCUR ON THE SAME SPAN.

6. HANGERS SUPPORTED BY METAL DECK WITH STRUCTURAL CONCRETE FILL SHALL BE INSTALLED USING ICC APPROVED ANCHORAGE SYSTEMS. SUCH HANGERS SHALL BE USED TO SUPPORT DUCTWORK (54" X 16" MAX.), PIPING (4" ROUND MAX.), OR CEILINGS, HANGERS MUST BE AT LEAST TWO FLUTES APART ON SAME DECK SPAN. LARGER DUCTWORK AND PIPING SHALL BE SUPPORTED BY STRUCTURAL BEAMS OR COLUMNS.

7. METAL DECK AT ROOFS, EXTERIOR BALCONIES, CANOPIES OR EXPOSED TO WEATHER SHALL BE VENTED.

STRUCTURAL STEEL AND MISCELLENEOUS METAL (ALL OTHER STEEL)

1. ALL STEEL SHALL BE DETAILED, FABRICATED AND ERECTED IN ACCORDANCE WITH THE LATEST EDITION OF AISC SPECIFICATION FOR THE DESIGN, FABRICATION AND ERECTION OF STRUCTURAL STEEL FOR BUILDINGS AND THE LATEST EDITION OF AISC SEISMIC PROVISIONS FOR STRUCTURAL STEEL BUILDINGS. WHERE THE STRUCTURAL STEEL IS EXPOSED AND INDICATED AS 'AESS' ON PLANS OR DETAILS, FABRICATION AND ERECTION SHALL ALSO BE IN ACCORDANCE WITH AISC CODE OF STANDARD PRACTICE FOR ARCHITECTURALLY EXPOSED STRUCTURAL STEEL.

2. GENERAL CONTRACTOR TO DETERMINE SCOPE OF WORK FOR BOTH STRUCTURAL STEEL AND MISCELLANEOUS METAL SUBCONTRACTORS (IF MULTIPLE SUBCONTRACTORS ARE USED). THE COMBINED SCOPE OF WORK FOR ALL SUBCONTRACTORS SHALL INCLUDE ALL STRUCTURAL STEEL AND MISCELLANEOUS METAL WORK SHOWN ON THE CONTRACT DRAWINGS.

3. STRUCTURAL STEEL SHALL CONFORM TO ASTM DESIGNATION AS INDICATED BELOW UNLESS NOTED OTHERWISE:

ALL WIDE FLANGE AND WT SHAPES	A992, GRADE 50
STEEL ANGLES AND CHANNELS	A36 UNO
ALL OTHER STRUCTURAL SECTIONS	A572, GRADE 50
DECK CLOSURE PLATES AND SHIM MATERIALS	A36
BEAM SHEAR PLATES, STIFFENER PLATES ALL OTHER PLATES	A572, GRADE 50 UNO
HSS (SQUARE FOR CONXTECH SUPERSTRUCTURE)	A500, GRADE B/C, 50 KSI MIN (SEE MF ELEVATIONS FOR COLS REQUIRING HIGHER YEILD STRESS)
HSS (RECTANGULAR, SQUARE, OR ROUND) FOR OTHER THAN SUPERSTRUCTURE	A500, GRADE B
STEEL PIPE (NOT LABELED AS HSS)	A53, GRADE B
STAINLESS STEEL SHAPES, PLATES AND BARS	A276
BOLTS	A325N
MACHINE BOLTS (USE ONLY WHERE INDICATED)	A307
ANCHOR BOLTS	F1554, GRADE 36 OR 105, HEADED (SEE COL SCHED AND FRAME ELEVATIONS)
THREADED AND HANGER ROD	A572, GR50
NUTS FOR BOLTS AND MACHINE BOLTS	A563
HARDENED WASHERS	F436
UNHARDENED WASHERS	F844
PLAIN WASHERS	ANSI B18.22.1

4. HIGH STRENGTH BOLTS SHALL BE INSTALLED IN ACCORDANCE WITH THE LATEST EDITION OF AISC SPECIFICATIONS FOR STRUCTURAL JOINTS USING ASTM A325. 1

5. HEADED ANCHOR STUDS AND THREADED STUDS SHALL BE NELSON (ICC ER-2856) GRANULAR FLUX-FILLED, AND SHALL BE MADE FROM COLD FINISHED LOW CARBON STEEL, CONFORMING TO ASTM A-108, GRADES 1010 THROUGH 1020 WITH A MINIMUM TENSILE STRENGTH OF 60,000 PSI. STUD WELDING INSPECTION AND TESTING SHALL CONFORM TO AWS D1.1.

6. DEFORMED BAR ANCHOR STUDS SHALL BE NELSON D2L (ICC ER-2907) GRANULAR FLUX-FILLED REBAR STUDS, AND SHALL BE MADE OF LOW CARBON COLD ROLLED STEEL WITH A MINIMUM TENSILE STRENGTH OF 80,000 PSI. STUD WELDING INSPECTION AND TESTING SHALL CONFORM TO AWS D1.1.

7. HOT DIP GALVANIZE IN ACCORDANCE WITH ASTM A123 AND ASTM A153 STRUCTURAL STEEL, MISCELLANEOUS METAL AND FASTENERS THAT ARE EXPOSED TO THE WEATHER. REPAIR GALVANIZING AFTER WELDING IN ACCORDANCE WITH ASTM A780.

8. WHEN FABRICATING BEAMS, PLACE NATURAL CAMBER UP. PROVIDE UPWARD CAMBER TO ALL MEMBERS SHOWN TO HAVE CAMBER. AMOUNT MEASURED IN THE FIELD PRIOR TO ERECTION SHALL NOT DEVIATE BY MORE THAN ALLOWED BY THE AISC SPECIFICATIONS. DO NOT CAMBER MEMBERS OCCURRING BELOW ELEVATOR ENTRANCE DOORS.

9. SPLICE MEMBERS ONLY WHERE INDICATED.

10. THE STRUCTURAL STEEL FABRICATOR SHALL FURNISH SHOP DRAWINGS FOR OWNER'S REPRESENTATIVE REVIEW BEFORE FABRICATION. SUBMITTALS SHALL BE IN SIZES COMMENSURATE WITH A TWO WEEK TURNAROUND TIME. A MAXIMUM OF 250 SHOP DRAWINGS EVERY TWO WEEKS IS PERMITTED UNLESS WRITTEN AUTHORIZATION IS PROVIDED BY THE ARCHITECT TO CHANGE THIS LIMIT.

11. AFTER FABRICATION, ALL STEEL SHALL BE CLEANED FREE OF RUST, LOOSE MILL SCALE AND OIL.

12. BOLT HOLES IN STEEL SHALL BE STANDARD HOLES, 1/16 INCH LARGER IN DIAMETER THAN NOMINAL SIZE OF BOLT USED, UNLESS NOTED OTHERWISE. BOLT HOLES IN BASE PLATES MAY BE OVERSIZED PER AISC TABLE 14-2 IF WASHERS ARE PROVIDED IN ACCORDANCE WITH THIS TABLE.

13. BOLTS SHALL BE SPACED AT 3" O.C. UNLESS NOTED OTHERWISE. THE DISTANCE FROM THE EDGE OF A STANDARDS HOLE TO THE EDGE OF A CONNECTING PART IN ANY DIRECTION SHALL NOT BE LESS THAN 1 1/2" U.N.O. THE EDGE DISTANCE MAYBE 1 1/4" AT THE ENDS OF BEAM CONNECTION ANGLES AND SHEAR END PLATES. THE DISTANCE FROM CENTER OF AN OVERSIZED OR SLOTTED HOLE TO THE EDGE OF A CONNECTING PART SHALL NOT BE LESS THAN THAT REQUIRED FOR A STANDARD HOLE TO THE EDGE OF A CONNECTED PART PLUS THE APPLICABLE INCREMENT C/2 FROM AISC TABLE J3.5.

14. ALL STRUCTURAL STEEL SURFACES TO BE WELDED OR HIGH-STRENGTH BOLTED, TO BE ENCASED IN CONCRETE OR TO RECEIVE SPRAY-APPLIED FIREPROOFING SHALL BE LEFT UNPAINTED.

15. SEE ARCHITECTURAL DRAWINGS FOR DETAILS OF FIREPROOFING.

16. COLUMN SHORTENING MAY OCCUR DUE TO THE WEIGHT OF CONSTRUCTION IN THE LEVELS ABOVE. COLUMNS WILL CONTINUE TO SHORTEN UNTIL ALL OF THE DEAD LOAD IS ON THE STRUCTURE, INCLUDING THE WEIGHT OF CLADDING, FLOOR BEAMS, TRANSFER GIRDERS, AND CANTILEVERS WILL CONTINUE TO DEFLECT WHEN ADDITIONAL LOAD IS APPLIED. HOWEVER, THIS MAY OR MAY NOT OCCUR UNTIL ALL OF THE DEAD LOAD IS APPLIED TO THE MEMBER.
THE FLOOR STRUCTURE (COMPOSITE SLAB DECK AND FRAMING) WILL DEFLECT DURING CONCRETE PLACEMENT. THE CONTRACTOR SHALL PROVIDE ADDITIONAL CONCRETE MATERIALS AS NECESSARY TO PROVIDE A FLAT FLOOR UP TO A MAXIMUM 1/4" ADDITIONAL THICKNESS.

17. REFER TO ARCHITECTURAL PLANS FOR MINIMUM HOURLY VALUES OF STEEL FIRE PROTECTION FOR DETERMINING THE THICKNESS OF SPRAY APPLIED FIREPROOFING. THE STRUCTURAL FRAME CONSISTS OF COLUMNS, STRUCTURAL ELEMENTS SUPPORTING TRIBUTARY AREAS EXCEEDING 200 SQUARE FEET, AND ALL BRACING MEMBERS IN PLAN AND ELEVATION. FLOOR OR ROOF MEMBERS WHICH HAVE NO CONNECTION TO COLUMNS AND ARE NOT SUPPORTING TRIBUTARY AREAS EXCEEDING 200 SQUARE FEET SHALL BE CONSIDERED SECONDARY MEMBERS.

POWDER ACTUATED FASTENERS (SHOT PINS)

1. POWDER ACTUATED FASTENERS INTO STEEL SHALL BE HILTI X-U FASTENERS (ESR-2269) OR RAMSET SP FASTENERS (ESR-1799). INSTALL ANCHORS IN (ESR-2269) OR RAMSET SP FASTENERS (ESR-1799). INSTALL ANCHORS IN ACCORDANCE WITH ICC REPORT AND MANUFACTURER'S RECOMMENDATIONS. FASTENERS SHALL BE OF SUFFICIENT LENGTH SUCH THAT THE POINT OF THE PIN PENETRATES THROUGH THE STEEL BASE MATERIAL WHEN CONNECTING TO STEEL LESS THAN 3/4 IN THICKNESS. FASTENERS LENGTH SHALL PROVIDE MINIMUM POINT PENETRATION OF 1/2" WHEN CONNECTING TO STEEL 3/4" OR THICKER IN THICKNESS U.N.O.

2. POWDER ACTUATED FASTENERS INTO CONCRETE SHALL BE HILTI X-U FASTENERS (ESR-2269) OR RAMSET SP STEPPED SHANK FASTENERS (ESR-1799). INSTALL ANCHORS IN ACCORDANCE WITH ICC REPORT AND MANUFACTURER'S RECOMMENDATIONS. PROVIDE FASTENERS WITH SUFFICIENT LENGTH TO PROVIDE 1-1/2" MINIMUM PENETRATION INTO CONCRETE U.N.O

3. FASTENERS SHALL NOT BE INSTALLED UNTIL THE CONCRETE HAS REACHED ITS DESIGNATED STRENGTH.

4. FASTENERS SHALL NOT BE INSTALLED IN CONCRETE WITH THICKNESS LESS THAN THREE TIMES THE PENETRATION REQUIRED, EXCEPT 1-1/2" PENETRATION IN 2-1/2" THICK CONCRETE FILL OVER METAL DECK IS ACCEPTABLE.

5. PROVIDE A MINIMUM OF 3" BETWEEN THE EDGE OF CONCRETE TO CENTER OF ANCHOR.

6. FASTENERS IN THE UNDERSIDE OF CONCRETE FILL OVER METAL DECK SHALL BE PLACED IN THE LOW FLUTES ONLY.

7. FASTENERS SHALL BE INSTALLED, BY A PRE-QUALIFIED OPERATOR, ACCORDING TO THE APPLICABLE ICC RESEARCH REPORT AND TESTED AS FOLLOWS: INSPECTOR SHALL OBSERVE THE TESTING OF THE FIRST 10 FASTENERS INSTALLATION. A TEST PULL-OUT LOAD OF NOT LESS THAN TWICE THE APPLICABLE ALLOWABLE LOAD PER ICC TABLES SHALL BE APPLIED TO THE PIN IN SUCH A MANNER AS NOT TO RESIST THE SPALLING TENDENCY OF THE CONCRETE SURROUNDING THE PIN (NOT APPLICABLE TO PINS INSTALLED INTO STEEL). RANDOM TESTS UNDER THE PROJECT INSPECTOR'S SUPERVISION SHALL BE MADE OF APPROXIMATELY 1 IN 20 PINS. SHOULD FAILURE OCCUR ON ANY PIN TESTED, ALL OF THE INSTALLATIONS MUST BE TESTED AND FAILED PINS REPLACED AT CONTRACTOR'S EXPENSE.

8. WHEN INSTALLING POWDER DRIVEN PINS IN EXISTING REINFORCED CONCRETE, USE CARE AND CAUTION TO AVOID CUTTING OR DAMAGING THE EXISTING REINFORCING BARS

STRUCTURAL STEEL AND MISCELLANEOUS METAL (ALL OTHER STEEL) WELDING

1. ALL WELDING SHALL BE IN STRICT CONFORMANCE WITH THE LATEST EDITION OF AWS D1.1 AND THE INTERNATIONAL BUILDING CODE WITH ALL APPLICABLE AMENDMENTS. ALL WELDED JOINTS SHALL BE PRE-QUALIFIED PER THE LATEST EDITION OF AWS D1.1. AND THE INTERNATIONAL BUILDING CODE WITH ALL APPLICABLE AMENDMENTS. ALL NON PRE- QUALIFIED WELDED JOINTS SHALL BE QUALIFIED BY TEST & PROCEDURE QUALIFICATION TEST RECORD INCLUDED PER THE 2010 AWS D1.1.

2. WELDING OF SHEET METAL AND METAL STUDS SHALL BE IN ACCORDANCE WITH AWS D1.3.

3. WELD LENGTHS CALLED FOR ON PLANS ARE THE NET EFFECTIVE LENGTH REQUIRED. WELD SIZE SHALL BE AISC MINIMUM UNLESS A LARGER SIZE IS NOTED. WHERE LENGTH OF WELD IS NOT SHOWN IT SHALL BE FULL LENGTH OF JOINT. ALL BUTT AND GROOVE WELDS SHALL BE FULL PENETRATION, UNLESS NOTED OTHERWISE.

4. ALL WELDING ELECTRODES AND ELECTRODE FLUX COMBINATIONS (FILLER METAL) SHALL BE E7XTX, E7XTXX OR E70XXX (MINIMUM 70 KSI), UNLESS NOTED OTHERWISE, AND SHALL MEET THE REQUIREMENTS FOR H16 PER AISC SEISMIC PROVISIONS.

5. ALL WELDS SHALL HAVE A FILLER METAL WITH CHARPY V-NOTCH TOUGHNESS OF 20 FT-LBS AVERAGE AT MINUS TWENTY DEGREES FAHRENHEIT AND 40FT-LBS AT SEVENTY DEGREES FAHRENHEIT. CERTIFY CONFORMANCE TO CHARPY V-NOTCH TOUGHNESS REQUIREMENTS WITH TESTS BY AN INDEPENDENT TESTING LABORATORY.

6. GMAW AND FCAW-G WELDING PROCESSES SHALL NOT BE PERMITTED WHEN WIND SPEED EXCEEDS 3 MPH.

7. WHERE FIELD WELDING IS NOTED, THE DESIGNATION IS GIVEN AS A SUGGESTED CONSTRUCTION PROCEDURE ONLY. THE CONTRACTOR IS SOLELY RESPONSIBLE FOR IDENTIFYING THE METHOD OF FABRICATION.

8. ALL SHOP WELDS SHALL BE PERFORMED BY A FABRICATOR LICENSED BY THE LOCAL JURISDICTION.

9. ALL WELDERS SHALL BE QUALIFIED FOR THE WORK THEY WILL BE PERFORMING AND SHALL HAVE CURRENT VALID CERTIFICATIONS ISSUED BY AWS AND THE GOVERNING JURISDICTION.

10. FACES OF FILLET WELDS EXPOSED TO VIEW SHALL HAVE AS-WELDED SURFACES THAT ARE REASONABLY SMOOTH AND UNIFORM. NO FINISHING OR GRINDING SHALL BE REQUIRED, EXCEPT WHERE CLEARANCES OR FIT OF OTHER ITEMS MAY SO NECESSITATE.

11. ALL PARTIAL AND FULL PENETRATION WELDS WHICH ARE EXPOSED TO VIEW SHALL BE GROUND SMOOTH AND FLUSH WITH FINISH SURFACE OF STEEL. HOLES EXPOSED TO VIEW SHALL BE FILLED WITH WELD METAL OR BODY SOLDER AND SMOOTHED BY GRINDING OR FILING.

12. CLEAN GROOVE PREPARATION THERMAL CUTS BY GRINDING.

13. WELDS SHALL BE TERMINATED AT THE END OF A JOINT IN A MANNER THAT WILL ENSURE SOUND WELDS. WHENEVER NECESSARY THIS SHALL BE DONE BY USE OF EXTENSION BARS AND RUN OFF TABS.

14. A WRITTEN "WELDING PROCEDURE SPECIFICATION" (WPS), PER AWS D1.1, SHALL BE DEVELOPED BY THE FABRICATOR/ERECTOR, AND REVIEWED BY THE OWNER'S REPRESENTATIVE AND BUILDING DEPARTMENT. THE WPS SHALL CONTAIN ALL THE NECESSARY INFORMATION REQUIRED BY THE CODE, THE SPECIFICATIONS, AND ANY OTHER INFORMATION NECESSARY TO PRODUCE WELDS THAT ARE IN COMPLIANCE WITH THESE REQUIREMENTS. THE WPS SHALL INCLUDE THE WELDING PARAMETERS RECOMMENDED BY THE ELECTRODE MANUFACTURER. ALL WELDERS AND INSPECTORS SHALL ADHERE TO THE WPS AND SHALL RETAIN A COPY

ADHESIVE ANCHORS AND DOWELS

1. ANCHORS AND DOWELS INSTALLED INTO CONCRETE SHALL BE INSTALLED USING HILTI HIT RE 500-SD (ICC ESR-2322) OR HILTI HIT-HY200 (ICC ESR 3187). INSTALLATION SHALL BE IN ACCORDANCE WITH ICC REPORT AND MANUFACTURER'S RECOMMENDATIONS. EMBEDMENT DEPTH FOR ANCHORS AND DOWELS IS AS FOLLOWS, UNLESS OTHERWISE NOTED. THE TESTING LABORATORY WILL PERFORM TENSION TESTS ON 25% OF ANCHORS AND DOWELS TO THE FOLLOWING TEST LOADS:

ROD DIA OR BAR SIZE	EMBEDMENT	TEST LOAD	BASE MATERIAL
3/8"	4"	3,000#	CONCRETE
1/2"	5"	4,500#	CONCRETE
5/8"	6"	6,500#	CONCRETE
3/4"	7"	9,000#	CONCRETE
7/8"	9"	11,000#	CONCRETE
1"	11"	15,000#	CONCRETE
1 1/4"	14"	20,000#	CONCRETE
#3	5"	3,500#	CONCRETE
#4	6 1/2"	5,500#	CONCRETE
#5	8"	8,500#	CONCRETE
#6	10"	12,000#	CONCRETE
#7	12"	16,500#	CONCRETE
#8	18"	21,500#	CONCRETE
#9	16"	23,000#	CONCRETE
#10	19"	26,500#	CONCRETE

2. ANCHORS SHALL CONFORM WITH ASTM A193 GRADE B7 THREADED RODS USING ASTM A 563 GRADE DH HEAVY HEX NUTS AND ASTM F436 WASHERS U.N.O.

3. DOWELS SHALL CONFORM WITH ASTM A615 OR ASTM A706 GRADE 60 REINFORCING STEEL U.N.O.

4. REPLACE ANCHORS AND DOWELS THAT FAIL DURING TESTING AND RETEST. IF MORE THAN 10% OF THE TESTED DOWELS AND ANCHORS FAIL TO ACHIEVE THE SPECIFIED TEST LOAD, TEST 100% OF THE DOWELS AND ANCHORS INSTALLED IN THE LAST 2 DAYS OF ANCHOR INSTALLATION.

5. CENTER BAR IN THE HOLE AND WEDGE TIGHT WITH WOODEN WEDGES TO HOLD IT IN PLACE UNTIL THE ADHESIVE SETS.

6. IF REINFORCEMENT IS ENCOUNTERED DURING DRILLING, ABANDON AND SHIFT THE HOLE LOCATION TO AVOID THE REINFORCEMENT. PROVIDE A MINIMUM OF 2 ANCHOR DIAMETERS OR 1 INCH, WHICHEVER IS LARGER, OF SOUND CONCRETE BETWEEN THE DOWEL AND THE ABANDONED HOLE. FILL THE ABANDONED HOLE WITH NON-SHRINK GROUT. IF THE ANCHOR OR DOWEL MAY NOT BE SHIFTED AS NOTED ABOVE, THE ENGINEER WILL DETERMINE A NEW LOCATION.

7. LOCATE REINFORCEMENT AND CONFIRM FINAL ANCHOR LOCATIONS PRIOR TO FABRICATING PLATES, MEMBERS, OR OTHER STEEL ASSEMBLIES ATTACHED WITH ADHESIVE ANCHORS.

MECHANICAL ANCHORS

1. EXPANSION OR WEDGE ANCHORS INTO CONCRETE: HILTI KB TZ (ICC ESR-1917) OR SIMPSON STRONG BOLT 2 (ICC 3037) TO BE INSTALLED IN ACCORDANCE WITH ICC REPORT AND MANUFACTURER'S RECOMMENDATIONS.

2. FASTENERS SHALL BE STAINLESS STEEL FOR EXTERIOR USE OR WHEN EXPOSED TO WEATHER. PROVIDE GALVANIZED CARBON STEEL ANCHORS AT OTHER LOCATIONS, UNLESS OTHERWISE NOTED.

3. IF REINFORCEMENT IS ENCOUNTERED DURING DRILLING, ABANDON AND SHIFT THE HOLE LOCATION TO AVOID THE REINFORCEMENT. PROVIDE A MINIMUM OF 2 ANCHOR DIAMETERS OR 1 INCH, WHICHEVER IS LARGER, OF SOUND CONCRETE BETWEEN THE DOWEL AND THE ABANDONED HOLE. FILL THE ABANDONED HOLE WITH NON-SHRINK GROUT. IF THE ANCHOR OR DOWEL MAY NOT BE SHIFTED AS NOTED ABOVE, THE STRUCTURAL ENGINEER WILL DETERMINE A NEW LOCATION.

4. LOCATE REINFORCEMENT AND CONFIRM FINAL ANCHOR LOCATIONS PRIOR TO FABRICATING PLATES, MEMBERS, OR OTHER STEEL ASSEMBLIES ATTACHED WITH MECHANICAL ANCHORS.

5. ANCHORS SHALL BE PROOF-TESTED BY OWNER'S TESTING AND INSPECTION AGENCY.

6. TEST ANCHORS NO SOONER THAN 24 HOURS AFTER INSTALLATION.

7. APPLY TEST LOAD BY ANY METHOD THAT WILL EFFECTIVELY MEASURE THE TENSION ON THE ANCHOR SUCH AS DIRECT PULL WITH A HYDRAULIC JACK, TORQUE WRENCH, OR CALIBRATED SPRING_LOADING DEVICES, ETC.

8. REACTION LOADS FROM TEST FIXTURES MAY BE APPLIED CLOSE TO THE ANCHOR BEING TESTED, PROVIDED THE ANCHOR IS NOT RESTRAINED FROM WITHDRAWING BY A BASE PLATE OR OTHER FIXTURE. IF RESTRAINT IS FOUND, LOOSEN AND SHIM OR REMOVE THE FIXTURE PRIOR TO TESTING.

9. UNLESS OTHERWISE NOTED, PROVIDE MINIMUM EMBEDMENT OF ANCHORS AS SHOWN IN TABLES BELOW.

10. TEST 50% OF ANCHORS PER ONE OF THE FOLLOWING METHODS AND IN ACCORDANCE WITH THE VALUES SHOWN IN THE TABLE:
    A. HYDRAULIC RAM METHOD: APPLY PROOF TEST LOAD WITHOUT REMOVING THE NUT. IF IT IS NOT POSSIBLE TO TEST WITH THE NUT INSTALLED, REPLACE THE NUT WITH A THREADED COUPLER TO THE SAME TORQUE MEASURED WITH A TORQUE WRENCH, AND THEN APPLY THE LOAD. ANCHOR IS ACCEPTABLE IF NO MOVEMENT IS OBSERVED AT THE TEST LOAD. MOVEMENT MAY BE DETERMINED WHEN THE WASHER UNDER THE NUT BECOMES LOOSE.
    B. TORQUE WRENCH METHOD: TEST ANCHORS TO THE TORQUE LOAD INDICATED IN THE TABLE WITHIN ONE-HALF TURN OF THE NUT.

11. IF ANY ANCHOR FAILS TESTING, REPLACE ANCHOR AND TEST ADDITIONAL ANCHORS OF THE SAME CATEGORY NOT PREVIOUSLY TESTED UNTIL TWENTY (20) CONSECUTIVE TESTS PASS, THEN RESUME INITIAL TESTING FREQUENCY.

WEDGE OR EXPANSION ANCHOR EMBEDMENT DEPTH AND TEST LOAD

ANCHOR DIAMETER	MIN EMBED	ANCHORS IN CONCRETE		ANCHORS IN MASONRY	
		TENSION LOAD (LBS)	TORQUE LOAD (FT-LBS)	TENSION LOAD (LBS)	TORQUE LOAD (FT-LBS)
1/4"	2"	800	10	300	10
3/8"	2"	1500	25	500	30
1/2"	3 1/4"	3000	40	1000	35
5/8"	4	4900	80	1250	55
3/4"	4 3/4"	6300	110	1700	120

CLIENT
CENTERCAL PROPERTIES, LLC

COPYRIGHT:
Any reproduction or distribution for any purpose other than authorized by IBI Group is forbidden. Written dimensions shall have precedence over scaled dimensions. Contractors shall verify and be responsible for all dimensions and conditions on the job and IBI Group shall be informed of any variations from the dimensions and conditions shown on the drawing. Shop drawings shall be submitted to IBI Group for approval before proceeding with fabrication.
COPYRIGHT © 2016 IBI GROUP

ISSUES

NO.	ISSUANCE	STATUS	DATE
1	STRUCTURAL ADDENDUM 1		05/25/16

SEAL
BARRY SCHINDLER
STATE OF WASHINGTON
21669
REGISTERED PROFESSIONAL ENGINEER
EXPIRES

SUB CONSULTANT
MARTIN & associates
JOHN A. MARTIN & ASSOCIATES
Structural Engineers
950 S. Grand Avenue
Los Angeles, Calif. 90015
Phone (213) 483-6490
Fax (213) 483-3084
J14261

PRIME CONSULTANT
IBI GROUP
18401 Von Karman Avenue, Suite 110
Irvine, CA 92612 United States
tel +1 949 833 5588 ext 146 fax +1 949 833 5511
ibigroup.com

PROJECT
The Village at Totem Lake - Building B
Kirkland, Washington

PROJECT NO:	J14261
DRAWN BY:	Author
CHKD' BY:	Checker
SCALE:	3/4" = 1'-0"
DATE:	05/25/16

SHEET TITLE
GENERAL NOTES

BLDG	SHEET NUMBER	ISSUE
B	S0002	

5/26/2016 12:53:56 PM

INSPECTION / TESTING

1. AN INDEPENDENT TESTING AGENCY AND SPECIAL INSPECTORS SHALL BE RETAINED BY THE OWNER TO PERFORM THE TESTS AND INSPECTION AS REQUIRED BY SECTION 1704 OF THE INTERNATIONAL BUILDING CODE. THE CONTRACTOR SHALL PROVIDE ACCESS TO THE SPECIAL INSPECTOR TO THE SITE OR FABRICATION SHOPS AND SHALL FURNISH SAMPLES OF MATERIALS FOR TESTING AS REQUESTED BY THE TESTING AGENCY AND THE GOVERNING CODE.

2. IF INITIAL TESTS OR INSPECTIONS MADE BY THE OWNER'S TESTING AGENCY REVEAL THAT ANY PORTION OF THE WORK DOES NOT COMPLY WITH THE CONTRACT DOCUMENTS, ADDITIONAL TESTS, INSPECTIONS, AND NECESSARY REPAIRS WILL BE MADE AT THE CONTRACTOR'S EXPENSE.

3. PROVIDE CONTINUOUS OR PERIODIC SPECIAL INSPECTION FOR ITEMS NOTED IN "TEST AND INSPECTION LIST", AS REQUIRED PER THE CHAPTER 17 OF THE INTERNATIONAL BUILDING CODE AND ALL APPLICABLE CITY OF KIRKLAND AMENDMENTS:

4. SPECIAL INSPECTIONS MAY NOT BE REQUIRED WHEN THE WORK IS DONE ON THE PREMISES OF A FABRICATOR REGISTERED AND APPROVED BY THE BUILDING OFFICIAL OR GOVERNING AGENCY HAVING JURISDICTION OVER THE PROJECT TO PERFORM SUCH WORK WITHOUT SPECIAL INSPECTION.

5. EACH CONTRACTOR RESPONSIBLE FOR THE CONSTRUCTION OF A WIND OR SEISMIC FORCE RESISTING SYSTEM ELEMENT SHALL SUBMIT A WRITTEN STATEMENT OF RESPONSIBILITY TO THE BUILDING OFFICIAL AND TO THE OWNER'S REPRESENTATIVE, PRIOR TO THE COMMENCEMENT OF THE WORK ON THE SYSTEM OR COMPONENT. THE CONTRACTOR'S STATEMENT OF RESPONSIBILITY SHALL CONTAIN THE FOLLOWING INFORMATION:
   - A. ACKNOWLEDGEMENT OF AWARENESS OF THE SPECIAL REQUIREMENTS CONTAINED IN THE STATEMENT OF SPECIAL INSPECTIONS.
   - B. ACKNOWLEDGEMENT THAT CONTROL WILL BE EXERCISED TO OBTAIN CONFORMANCE WITH THE CONSTRUCTION DOCUMENTS APPROVED BY THE BUILDING OFFICIAL
   - C. PROCEDURES FOR EXERCISING CONTROL WITHIN THE CONTRACTOR'S ORGANIZATION, THE METHOD AND FREQUENCY OF REPORTING AND DISTRIBUTION OF THE REPORTS.
   - D. IDENTIFICATION AND QUALIFICATIONS OF THE PERSONS EXERCISING SUCH CONTROL AND THEIR POSITIONS IN THE ORGANIZATION.

6. SPECIAL INSPECTIONS FOR THE STRUCTURAL STEEL PORTIONS OF THE LATERAL FORCE RESISTING SYSTEM SHALL ALSO COMPLY WITH THE REQUIREMENTS OF AISC 341.

7. NON-DESTRUCTIVE WELD TESTING: ULTRASONIC TESTING IS REQUIRED FOR ALL (100%) COMPLETE PENETRATION WELDS. TESTING SHALL BE PERFORMED 24 HOURS OR MORE AFTER COMPLETION OF WELDING. WELD BACKING REMOVAL AREAS AND FILLET WELDS SHALL BE SUBJECTED TO MAGNETIC PARTICLE EXAMINATION.

8. BASE METAL THICKER THAN 1-1/2", SUBJECTED TO THROUGH THICKNESS WELD SHRINKAGE STRAINS, SHALL BE ULTRASONICALLY TESTED DIRECTLY BEHIND SUCH WELDS 48 HOURS OR MORE AFTER COMPLETION OF WELDING

9. TEST BY CALIBRATED TORQUE WRENCH A MINIMUM OF ONE (1) HIGH STRENGTH BOLT AT EACH SHEAR CONNECTION. A MINIMUM OF TWO (2) BOLTS PER CONNECTION FOR CONNECTION WITH 8 BOLTS OR MORE AND A MINIMUM OF 2 BOLTS PER FRAME BEAM SHEAR CONNECTION.

10. TEST A MINIMUM OF 10% OF FILLET WELDS BY MAGNETIC PARTICLE (ASTM 109 METHOD). TEST A MINIMUM OF 25% OF CONTINUITY PLATE FILLET WELDS AND BEAM FILLET WELDS (100% IN MOMENT ZONES) BY MAGNETIC PARTICLE.

11. ALL HEAVY SECTION COLUMN FLANGES LOCATED AT WELDED MOMENT CONNECTIONS SHALL BE ULTRASONICALLY EXAMINED, PRIOR TO WELDING, FOR EVIDENCE OF LAMINATIONS, INCLUSIONS OR OTHER DISCONTINUITIES. TESTING SHALL BE IN ACCORDANCE WITH ASTM A435 (STRAIGHT BEAM ULTRASONIC EXAMINATION OF STEEL PLATES), OR ASTM A898 (STRAIGHT BEAM ULTRASONIC EXAMINATION OF ROLLED STEEL STRUCTURAL SHAPES) AS APPLICABLE. THE AREA TO BE TESTED IS A ZONE 6 IN. ABOVE AND BELOW EACH BEAM FLANGE CONNECTION. FOR PLATES, ANY DISCONTINUITY CAUSING A TOTAL LOSS OF BACK REFLECTION THAT CANNOT BE CONTAINED WITHIN A CIRCLE 3 INCHES IN DIAMETER, OR ONE-HALF THE PLATE THICKNESS, WHICHEVER IS GREATER, SHALL BE REJECTED. FOR SHAPES, ASTM 898 LEVEL I CRITERIA IS APPLICABLE.

12. APPROVAL BY THE INSPECTOR OF MATTERS NOT SPECIFICALLY CONSTRUCTED PER THE APPROVED DRAWINGS DOES NOT MEAN THE FAILURE TO COMPLY WITH THE CONSTRUCTION DOCUMENTS HAS BEEN ACCEPTED. ANY DETAIL THAT FAILS TO BE CLEAR OR IS AMBIGUOUS MUST BE REFERRED TO THE STRUCTURAL ENGINEER FOR INTERPRETATION OR CLARIFICATION.

13. INSPECTION AND TESTING REPORTS SHALL BE SUBMITTED TO THE STRUCTURAL ENGINEER WITHIN SEVEN DAYS OF WHEN THE INSPECTION WAS MADE OR WHEN THE TESTING WAS PERFORMED.

14. THE STRUCTURAL ENGINEER SHALL BE NOTIFIED IMMEDIATELY OF ANY INSPECTION OR TESTING WHICH DOES NOT COMPLY WITH THE REQUIREMENTS OF THE CONTRACT DOCUMENTS.

TEST AND INSPECTION LIST

STRUCTURAL STEEL						
X	REVIEW MILL CERTIFICATE, TEST REPORTS AND MATERIAL IDENTIFICATION DELIVERED TO THE SITE					
C	REVIEW WELDING PROCEDURE SPECIFICATION & WELDER CERTIFICATION					
P	INSTALLATION OF NON-SLIP CRITICAL HIGH-STRENGTH BOLTS & WASHERS (PROVIDE CONTINUOUS INSPECTION IF INSTALLATION IS PERFORMED WITH CALIBRATED WRENCH)					
C	INSTALLATION OF SLIP CRITICALHIGH-STRENGTH BOLTS & WASHERS					
P	FIELD ERECTION INSPECTION					
X	FABRICATION INSPECTION	P	SHOP	P	FIELD	
X	WELDING INSPECTION	C	SHOP	C	FIELD	
X	NON-DESTRUCTIVE WELD TEST	X	SHOP	X	FIELD	
X	BOLTING INSPECTION	X	SHOP	X	FIELD	
P	COMPOSITE STUD INSPECTION & TESTING					
P	STEEL JOIST INSTALLATION INSPECTION					
C	INSTALLATION OF ANCHOR BOLTS BEFORE & DURING CONCRETE POUR					

METAL DECK	
X	REVIEW MILL CERTIFICATES & TEST REPORTS
P	PLACEMENT INSPECTION
P	WELDING & FASTENING INSPECTION

REINFORCING STEEL					
X	REVIEW MILL CERTIFICATES & TEST REPORTS				
X	SAMPLE & TEST	X	REINFORCING BARS	X	WELDED WIRE FABRIC
P	PLACEMENT INSPECTION				
C	WELDING INSPECTION				
P	TEST REINFORCING FOR WELDABILITY OTHER THAN ASTM A706				

CONCRETE, SHOTCRETE, CMU, GROUT & MORTAR

CONCRETE	SHOTCRETE	CMU	GROUT	MORTAR	
X	X	X	X	X	MIX DESIGN REVIEW
X	X	X	X	X	VERIFICATION OF CORRECT MIX DESIGN USED DURING POUR
	C	C			PREPARATION OF SAMPLES FOR TESTING PURPOSES
X					BATCH PLANT INSPECTIONS
C	C	C			CAST, PICK-UP, AND COMPRESSION TEST SAMPLES
C	C				SLUMP, ENTRAINED AIR, & TEMPERATURE TEST
X					SHRINKAGE TEST
C	C	C	C	P	PLACEMENT INSPECTION
P	P	P			CURING TEMPERATURE AND TECHNIQUES
P					FORMWORK INSPECTION

MISCELLANEOUS	
C	MECHANICAL ANCHORS
C	ADHESIVE OR GROUTED ANCHORS AND DOWELS
C	BOLTS CAST IN CONCRETE OR MASONRY
C	COLD FORM METAL FRAMING INSTALLATION AND WELDING

NOTES:
C: INDICATES CONTINUOUS INSPECTION
P: INDICATES PERIODIC INSPECTION
X: INDICATES REQUIRED INSPECTION

CLIENT
CENTERCAL PROPERTIES, LLC

COPYRIGHT:
Any reproduction or distribution for any purpose other than authorized by IBI Group is forbidden. Written dimensions shall have precedence over scaled dimensions. Contractors shall verify and be responsible for all dimensions and conditions on site. Any work that is not in accordance with the drawing shall then the dimensions and conditions shown on the drawing. Shop drawings shall be submitted to IBI Group for approval before proceeding with fabrication.

COPYRIGHT © 2016 IBI GROUP

ISSUES

NO.	ISSUANCE	STATUS	DATE

SEAL
STATE OF WASHINGTON
DANIEL SCHNUPER
21669
REGISTERED PROFESSIONAL ENGINEER
EXPIRES

SUB CONSULTANT
MARTIN & associates
JOHN A. MARTIN & ASSOCIATES
Structural Engineers
950 S. Grand Avenue
Los Angeles, Calif. 90015
Phone (213) 483-6490
Fax (213) 483-3084
J14261

PRIME CONSULTANT
IBI GROUP
18401 Von Karman Avenue, Suite 110
Irvine, CA 92612 United States
tel +1 949 833 5588 ext 146 fax +1 949 833 5511
ibigroup.com

PROJECT
The Village at Totem Lake - Building B
Kirkland, Washington

PROJECT NO:	J14261
DRAWN BY:	Author
CHKD BY:	Checker
SCALE:	3/4" = 1'-0"
DATE:	05/25/16

SHEET TITLE
GENERAL NOTES

BLDG	SHEET NUMBER	ISSUE
B	S0003	

5/26/2016 12:53:57 PM C:\Users\daniel\Documents\ATW_Totem_B\bldB_S_2016_daniel.rvt

STRUCTURAL ABBREVIATIONS

		INFO	INFORMATION
AB	ANCHOR BOLT	INT	INTERIOR
ABV	ABOVE		
ADDL	ADDITIONAL	JST	JOIST
ALT	ALTERNATE	JT	JOINT
ANCH	ANCHOR		
&	AND	KSI	KIP PER SQUARE INCH
ARCH	ARCHITECT(URAL)		
@	AT	LBS	POUNDS
		LLBB	LONG LEG BACK-BACK
BF	BRACE FRAME	LLH	LONG LEG HORIZONTAL
BLDG	BUILDING	LLV	LONG LEG VERTICAL
BLK	BLOCK	LONG	LONGITUDINAL
BLKG	BLOCKING	LT WT	LIGHT WEIGHT
BEL	BELOW	LVL	LAMINATED VENEER (LUMBER)
BM	BEAM	LVL	LEVEL (FLOOR)
BN	BOUNDARY NAILING		
B or BOT	BOTTOM	MAX	MAXIMUM
BRG	BEARING	MB	MACHINE BOLT
BTWN	BETWEEN	MECH	MECHANICAL
BU	BUILT-UP	MEZZ	MEZZANINE
BUB	BACK-UP BAR	MFR	MANUFACTURER
		MIN	MINIMUM
CAMB(C)	CAMBER(ED)	MISC	MISCELLANEOUS
CBC	CALIFORNIA BUILDING CODE	MTL	METAL
CG	CENTER OF GRAVITY	MS	MIDDLE STRIP
CIP	CAST IN PLACE		
CJ	CONSTRUCTION JOINT	(N)	NEW
	OR CONTROL JOINT	NIC	NOT IN CONTRACT
CJP	COMPLETE JOINT	NO (#)	NUMBER
	PENETRATION	NS	NEAR SIDE
CL(℄)	CENTERLINE	NTS	NOT TO SCALE
CLG	CEILING	NORM WT	NORMAL WEIGHT
CLR	CLEAR		
CMU	CONCRETE MASONRY UNIT	OC	ON CENTER (NOT NECESSARY)
COL	COLUMN	OD	OUTSIDE DIAMETER
CONC	CONCRETE	OF	OUTSIDE FACE
CONN	CONNECTION	OH	OPPOSITE HAND
CONT	CONTINUOUS	O-O	OUT TO OUT
CS	COLUMN STRIP	OPNG	OPENING
CRC	COLD ROLLED CHANNEL		
CTR	CENTER(ED)	PARA	PARALLEL
CTRSK	COUNTERSINK	P/C	PRECAST
C-C	CENTER TO CENTER	PERP	PERPENDICULAR
		PJP	PARTIAL JOINT PENETATION
d	PENNEY(NAILS)	PL (℘)	PLATE
DBL	DOUBLE	PLY	PLYWOOD
DET	DETAIL	PSF	POUNDS PER SQUARE FOOT
DF	DOUGLAS FIR	PSI	POUNDS PER SQUARE INCH
DIA(Ø)	DIAMETER	PT	PRESSURE TREATED
DIAG	DIAGONAL	P/T	POSTTENSIONED(PRESTRESSED)
DIM	DIMENSION		
DN	DOWN	RAD (R)	RADIUS
DO	DITTO (REPEAT)	REF	REFERENCE
DP	DEEP	REQ'D	REQUIRED
DWG	DRAWING	REINF	REINFORCEMENT(ING)
DWL	DOWELS	RJ	ROOF JOIST
EA	EACH	SC	SLIP CRITICAL
EBF	ECCENTRIC BRACE FRAME	SEP	SEPARATION
EF	EACH FACE	SCHED	SCHEDULE
EJ	EXPANSION JOINT	SIM	SIMILAR
ELEC	ELECTRICAL	SIMP	SIMPSON
ELEV	ELEVATION/ELEVATOR	SHT	SHEET
EMBED	EMBEDMENT	SHTG	SHEATHING
EN	EDGE NAILING	SLBB	SHORT LEB BACH-BACK
EQ	EQUAL	SLV	SHORT LEB VERTICAL
EQUIP	EQUIPMENT	SMS	SHEET METAL SCREWS
ES	SIDE EACH	SOG	SLAB ON GRADE
EW	EACH WAY	SPECS	SPECIFICATIONS
EXIST(E)	EXISTING	SP	SPACE (S)
EXP	EXPANSION	SQ	SQUARE
EXT	EXTERIOR	SSC	SINGLE SHEAR CONNECTION
		STAGG	STAGGER(ED)
FIN	FINISH(ED)	STD	STANDARD
FLR	FLOOR	STIFF	STIFFENER
FDN	FOUNDATION	STL	STEEL
FLG	FLANGE	STRUC	STRUCTURAL
FN	FIELD NAILING	SYMM	SYMMETRICAL
FOB	FACE OF BLOCK OR BRICK		
FOC	FACE OF CONCRETE	T & B	TOP AND BOTTOM
FO PLY	FACE OF PLYWOOD	T & G	TONGUE AND GROOVE
FOS	FACE OF STUDS	TEMP	TEMPORARY
FMG	FRAMING	THK	THICK(NESS)
FS	FAR SIDE	THRD	THREADED
FT	FOOT	THRU	THROUGH
FTG	FOOTING	TP	TOP OF PARAPET
		T PLY	TOP OF PLYWOOD
GA	GAGE	TRANS	TRANSVERSE
GALV	GALVANIZED	TOC	TOP OF CONCRETE
GB	GRADE BEAM	TOS	TOP OF STEEL
GL	GRID LINE	TSG	TAPERED STEEL GIRDER
GLB	GLUE-LAMINATED BEAM	TOW	TOP OF WALL
		TYP	TYPICAL
HCA	HEADED CONCRETE		
	ANCHOR	UNO	UNLESS NOTED OTHERWISE
HD	HOLD DOWN		
HDR	HEADER	VERT	VERTICAL
HGR	HANGER		
HORIZ	HORIZONTAL	W/	WITH
HSB	HIGH STRENGTH BOLT	WBS	WELDED BEAM SEAT
HS	HIGH STRENGTH	WD	WOOD
HT	HEIGHT	WP	WORK POINT
		WPJ	WEAKENED PLANE JOINT
IBC	INTERNATIONAL BUILDING CODE	WS	WELDED STUDS
ID	INSIDE DIAMETER	WT	WEIGHT
IF	INSIDE FACE	WWF	WELDED WIRE FABRIC
IN	INCH		

COLUMN NOMENCLATURE

CG = HSS GRAVITY COLUMN
CM = HSS16x16 CONXL MOMENT COLUMN
CB = BOX16x16 CONXL MOMENT COLUMN

C = COLUMN (MEMBER TYPE)

BEAM NOMENCLATURE

BMM - PROFILE
BMG - PROFILE
BGM - PROFILE
BMC - PROFILE
BCM - PROFILE
BGG - PROFILE
BGC - PROFILE
BCG - PROFILE

BEAM PROFILE:
W18
W21
W24
W27
W30

See ANSI/AISC 358-10 Prequalified Connections for Special and Intermediate Steel Moment Frames for Seismic Applications, Chapter 10. "Conxtech ConXL Moment Connection", for design procedures.

CONNECTION TYPE FAR END (RIGHT)
CONNECTION TYPE NEAR END (LEFT)

CONNECTION TYPE LEGEND
C = CANTILEVER BEAM TO BEAM OR BEAM TO COLUMN MOMENT CONN. (FULLY RESTRATINED)
G = GRAVITY BEAM TO BEAM OR BEAM TO COLUMN CONN. (PINNED)
M = CONXL BEAM TO COLUMN MOMENT CONN. (FULLY RESTRAINED)

B=BEAM (MEMBER TYPE)

COLUMN BASE NOMENCLATURES

CBF-X- #

NUMBER OF BOLTS REQ'D
B: BOLTED
E: EMBED
CBF=COLUMN BASEPLATE FOR A FIXED CONDITION

CBP-X- #

NUMBER OF BOLTS REQ'D
B: BOLTED
E: EMBED
CBP=COLUMN BASE PLATE FOR A PINNED CONNECTION

XL400 MOMENT COLLAR NOMENCLATURE

XL400-CCA — CONNECTOR CORNER ASSEMBLY
-CT — CORNER TOP
-CM — CORNER MIDDLE
-CB — CORNER BOTTOM
XL400-CFA — CONNECTOR FLANGE ASSEMBLY
-FT — FLANGE TOP
-FM — FLANGE MIDDLE
-FB — FLANGE BOTTOM

GRAVITY FASTENER NOMENCLATURE

CWA=COLUMN WEB ANGLE
(FOR USE ON COLUMNS)

CWA-_ x _ x _ x _ - #

NUMBER OF BOLTS PER LEG
CWA HEIGHT
CWA THICKNESS
CWA SHORT LEG LENGTH
CWA LONG LEG LENGTH

BWA=BEAM WEB ANGLE
(FOR USE ON BEAMS)

BWA-_ x _ x _ x _ - #

NUMBER OF BOLTS PER LEG
BWA HEIGHT
BWA THICKNESS
BWA SHORT LEG LENGTH
BWA LONG LEG LENGTH

NOTE: REFERENCE SHEET SX-4.20 FOR REQUIRED CLIP SIZES

CLIENT
CENTERCAL PROPERTIES, LLC

COPYRIGHT:
Any reproduction or distribution for any purpose other than authorized by IBI Group is forbidden. Written dimensions shall have precedence over scaled dimensions. Contractors shall verify and be responsible for all dimensions and conditions on the job, and report any errors or omissions to the architect then the dimensions and conditions shown on the drawing. Shop drawings shall be submitted to IBI Group for approval before proceeding with fabrication.
COPYRIGHT © 2016 IBI GROUP

ISSUES

NO.	ISSUANCE	STATUS	DATE

SEAL
BARRY SCHRAMM STATE OF WASHINGTON 21669 REGISTERED PROFESSIONAL ENGINEER
EXPIRES

SUB CONSULTANT
MARTIN & associates
JOHN A. MARTIN & ASSOCIATES
Structural Engineers
950 S. Grand Avenue
Los Angeles, Calif. 90015
Phone (213) 483-6490
Fax (213) 483-3084
J14261

PRIME CONSULTANT
IBI
IBI GROUP
18401 Von Karman Avenue, Suite 110
Irvine, CA 92612 United States
tel +1 949 833 5588 ext 146 fax +1 949 833 5511
ibigroup.com

PROJECT
The Village at Totem Lake - Building B
Kirkland, Washington

PROJECT NO:	J14261
DRAWN BY:	Author
CHKD' BY:	Checker
SCALE:	As indicated
DATE:	05/25/16

SHEET TITLE
GENERAL NOTES

BLDG	SHEET NUMBER	ISSUE
B	S0004	

5/26/2016 12:53:58 PM C:\Users\jskelton\Documents\ATW_Totem_Bldg\B_S_2016_jskelton.rvt

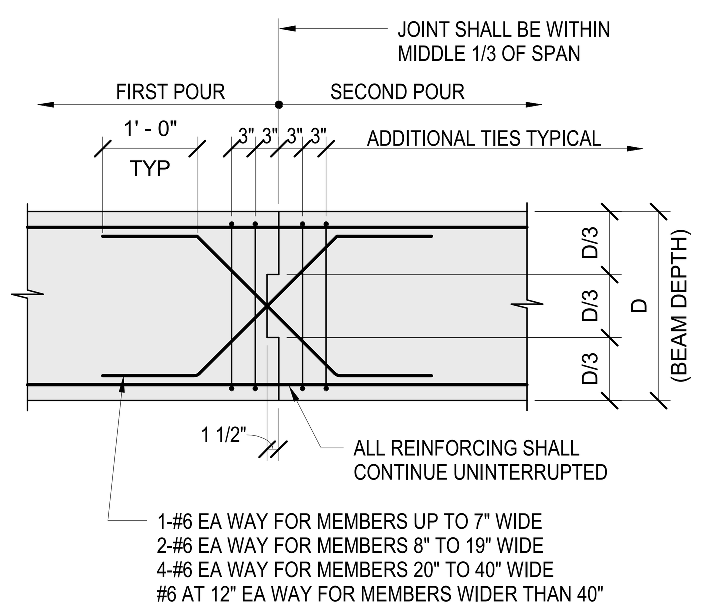

CONCRETE BEAM AND GIRDER CONSTRUCTION JOINT — 5

TENSION DEVELOPMENT LENGTH SCHEDULE (L_d)

BAR SIZE	f'c=3000 PSI		f'c=4000 PSI		f'c=5000 PSI		f'c=6000 PSI		f'c=7000 PSI		f'c=8000 PSI	
	TOP BARS	OTHER BARS	TOP BARS	OTHER BARS	TOP BARS	OTHER BARS	TOP BARS	OTHER BARS	TOP BARS	OTHER BARS	TOP BARS	OTHER BARS
#3	22	17	19	15	17	13	15	12	14	12	13	12
#4	29	22	25	19	22	17	20	16	19	15	18	14
#5	36	28	31	24	28	22	25	20	24	18	22	17
#6	43	33	37	29	33	26	31	24	28	22	26	20
#7	63	48	54	42	49	37	44	34	41	32	38	30
#8	72	55	62	48	55	43	51	39	47	36	44	34
#9	81	62	70	54	63	48	57	44	53	41	49	38
#10	91	70	79	61	70	54	64	49	59	46	56	43
#11	101	78	87	67	78	60	71	55	66	51	62	48
#14	121	93	105	81	94	72	86	66	79	61	74	57
#18	161	124	139	107	125	96	114	88	106	81	99	76

BAR SPLICE LENGTH SCHEDULE

BAR SIZE	f'c=3000 PSI		f'c=4000 PSI		f'c=5000 PSI		f'c=6000 PSI		f'c=7000 PSI		f'c=8000 PSI	
	TOP BARS	OTHER BARS	TOP BARS	OTHER BARS	TOP BARS	OTHER BARS	TOP BARS	OTHER BARS	TOP BARS	OTHER BARS	TOP BARS	OTHER BARS
#3	28	22	24	19	22	17	20	16	18	16	17	16
#4	37	29	32	25	29	22	26	20	25	19	23	18
#5	47	36	40	31	36	28	33	25	31	24	29	22
#6	56	43	48	37	43	33	40	31	37	28	34	26
#7	81	63	70	54	63	49	58	44	53	41	50	38
#8	93	72	80	62	72	55	66	51	61	47	57	44
#9	105	81	91	70	81	63	74	57	69	53	64	49
#10	118	91	102	79	91	70	83	64	77	59	72	56
#11	131	101	113	87	101	78	93	71	86	66	80	62
#14	SEE NOTE #12											
#18	SEE NOTE #12											

NOTES:
1. LAP SPLICES ARE SHOWN ON DRAWINGS. WHERE NO LAP LENGTH IS SHOWN, USE THIS SCHEDULE.
2. BAR SPLICE SCHEDULE BASED ON CASE #1, LAP CLASS B
3. C-C BARS MUST BE 3.0d_b MIN BY CODE = CASE 1
4. BAR COVER ON BEAMS & COLUMNS 1 1/2" + 1/2" = 2" > d_b = CASE 1 REQUIRED LAP LENGTH.

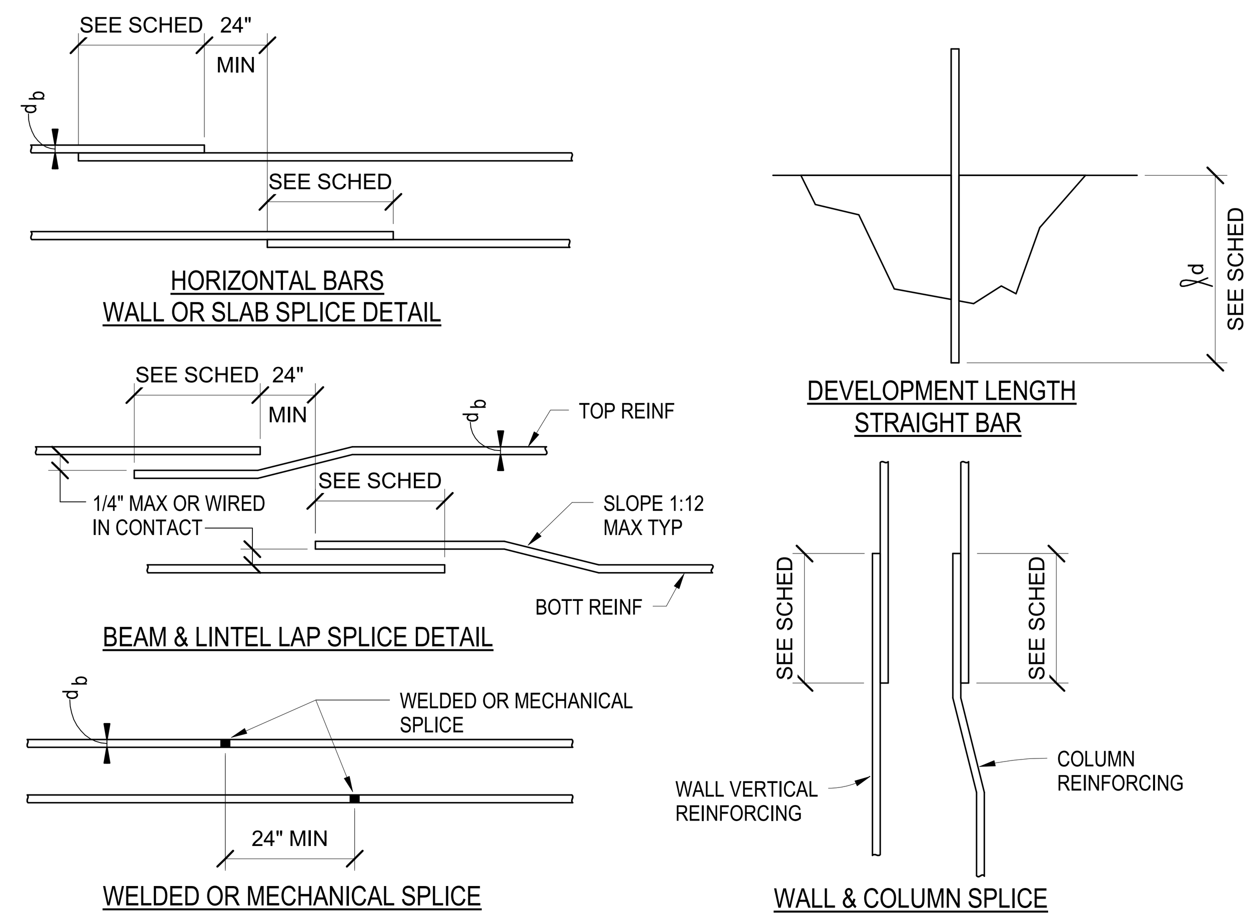

5. TABULATED VALUES ARE IN INCHES AND ARE BASED ON GRADE 60 REINFORCING (NOT COATED), NORMAL WEIGHT CONCRETE PER ACI 318-2008. USE THESE VALUES ONLY WHERE LENGTHS ARE NOT INDICATED ON THE DWGS.
6. TOP BARS ARE HORIZONTAL BARS SO PLACED THAT MORE THAN 12" OF CONCRETE IS CAST IN THE MEMBER BELOW THE BAR.
7. INCREASE SCHEDULED LENGTHS BY 30% FOR LIGHTWEIGHT CONCRETE.
8. THE SMALLER BAR LAP LENGTH SHALL BE USED WHEN SPLICING DIFFERENT SIZE BARS.
9. THE CONTRACTOR, AT HIS OPTION, MAY USE A BUTT WELDED SPLICE, OR APPROVED MECHANICAL IN LIEU OF THE LAP SPLICE SHOWN-SEE TYPICAL WELDED SPLICE DETAIL.
10. ALL DETAILING AND PLACING OF REINFORCING SHALL COMPLY WITH THE PLANS AND DETAILS.
11. USE BUTT-WELDED SPLICE OR APPROVED MECHANICAL SPLICE TO #14 AND #18 BARS.

CONCRETE REINFORCING DEVELOPMENT LENGTH AND SPLICE LENGTH SCHEDULE — 7

NOTE: FOR SIZE AND SPACING OF ALL TIES AND STIRRUPS, REFER TO SCHEDULE AND/OR DETAILS TYPICAL.

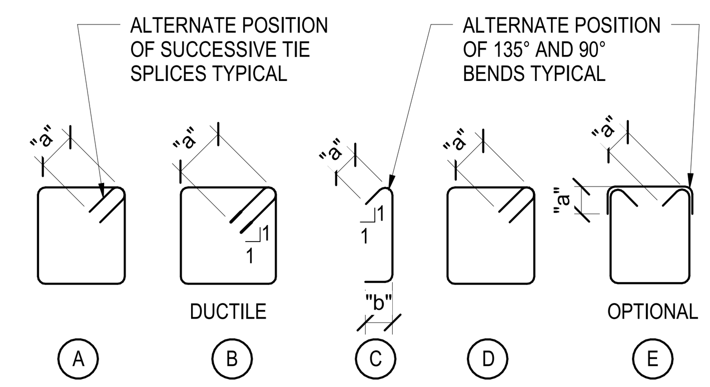

TYPICAL COLUMN TIES — BEAM STIRRUPS

DIMENSION "a" FOR #5 TIES & SMALLER = 6db, 3" MIN
FOR #6-#8 TIES = 6db
DIMENSION "b" FOR #5 TIES & SMALLER = 6db, 3" MIN
FOR #6-#8 TIES = 12db

TYPICAL COLUMN TIES AND BEAM STIRRUPS — 1

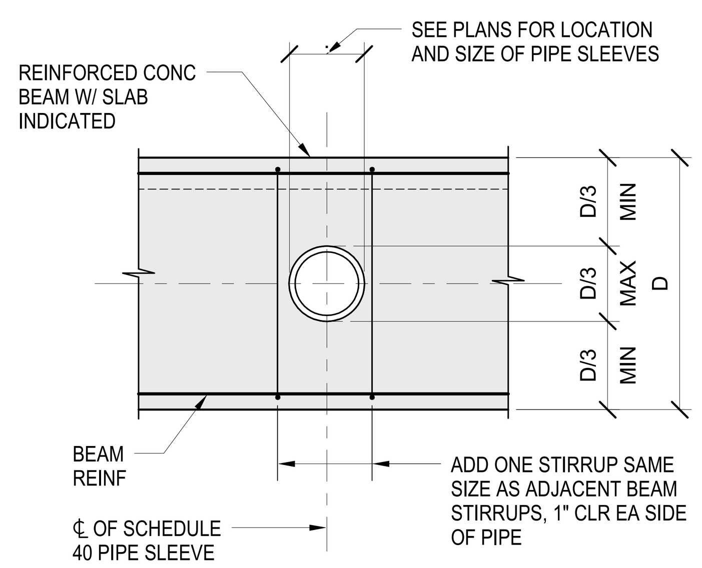

ELEVATION

NOTE:
PENETRATIONS THRU BEAMS ARE PERMITTED ONLY WITH THE REVIEW OF THE STRUCTURAL ENGINEER.

PIPE SLEEVE THROUGH CONCRETE BEAM — 10

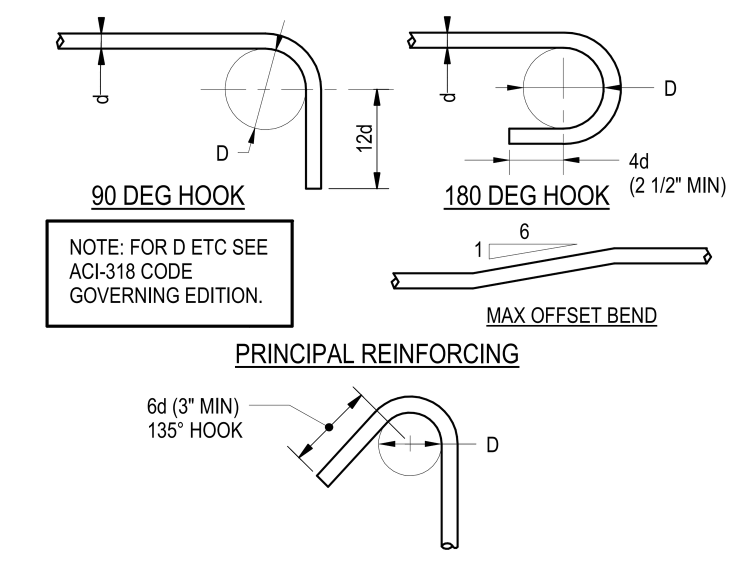

NOTES: 1. ALL BENDS SHALL BE MADE COLD
2. #14 & #18 BARS SHALL BE BEND-TESTED AND APPROVED PRIOR TO BENDING

BAR BENDS — 6

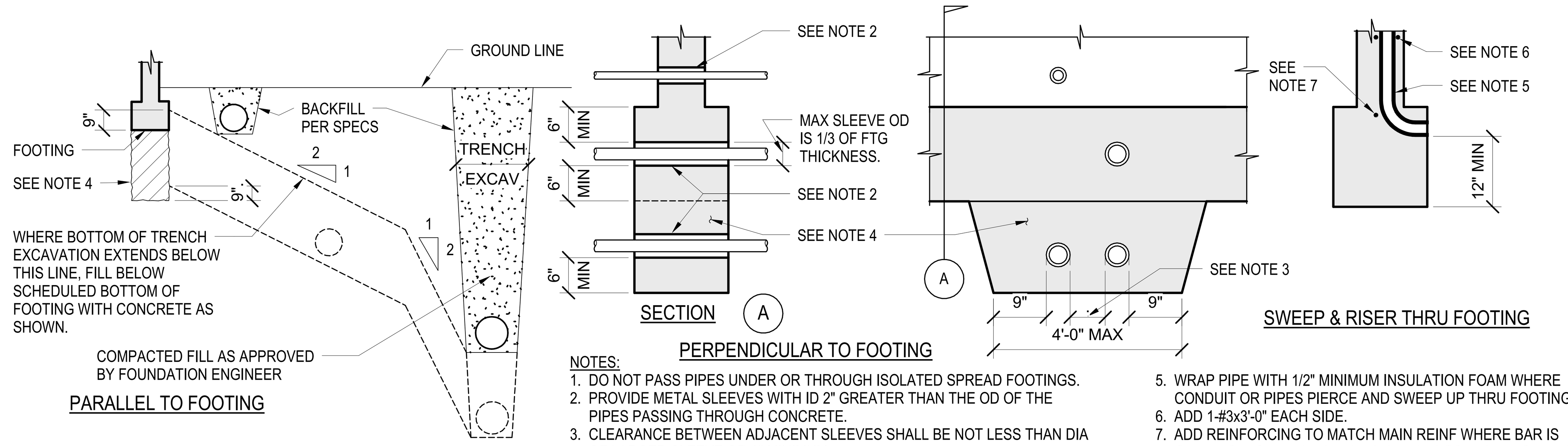

NOTES:
1. DO NOT PASS PIPES UNDER OR THROUGH ISOLATED SPREAD FOOTINGS.
2. PROVIDE METAL SLEEVES WITH ID 2" GREATER THAN THE OD OF THE PIPES PASSING THROUGH CONCRETE.
3. CLEARANCE BETWEEN ADJACENT SLEEVES SHALL BE NOT LESS THAN DIA OF LARGER SLEEVE OR 6" MINIMUM.
4. FOR PIPES BELOW FOOTINGS, EXCAVATE AS SHOWN AND FILL WITH CONCRETE. THE CONTRACTOR SHALL BE RESPONSIBLE FOR SHORING, SHEATHING OR OTHERWISE MAINTAINING THE SIDES OF THE EXCAVATION FROM CAVE-INS UNTIL ALL BACKFILL IS COMPLETED.
5. WRAP PIPE WITH 1/2" MINIMUM INSULATION FOAM WHERE CONDUIT OR PIPES PIERCE AND SWEEP UP THRU FOOTING.
6. ADD 1-#3x3'-0" EACH SIDE.
7. ADD REINFORCING TO MATCH MAIN REINF WHERE BAR IS CUT AT CHASE. LAP W/ MAIN REINF PER SCHEDULE ON EACH SIDE OF CHASE.
8. THE TERMS "PIPES" & "CONDUITS" ARE SYNONYMS.

PIPE TRENCES AND PENETRATIONS AT FOOTING — 12

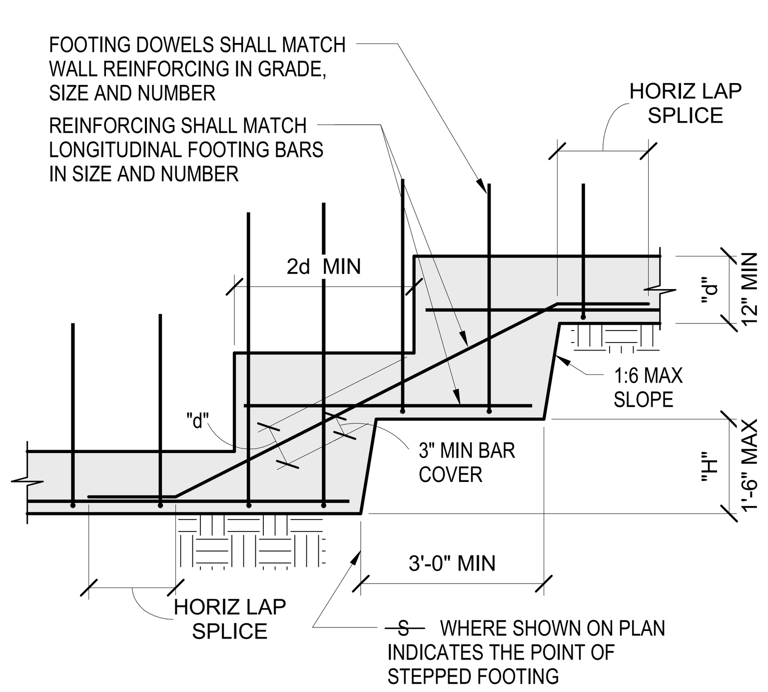

STEPPED FOOTING — 18
3/4" = 1'-0"

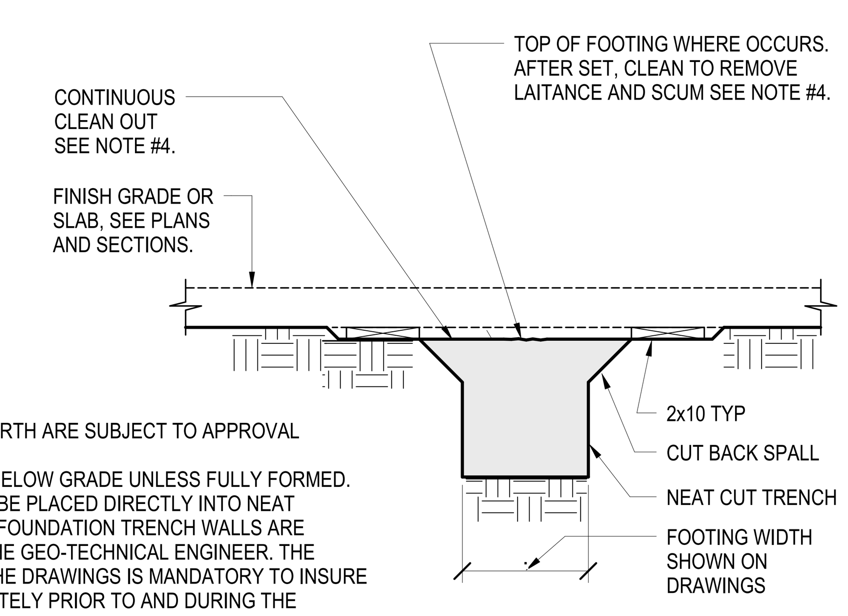

NOTES:
1. FOOTING POURED AGAINST EARTH ARE SUBJECT TO APPROVAL OF GEO-TECHNICAL ENGINEER
2. FORMWORK NOT PERMITTED BELOW GRADE UNLESS FULLY FORMED.
3. FOUNDATION CONCRETE MAY BE PLACED DIRECTLY INTO NEAT EXCAVATIONS PROVIDED THE FOUNDATION TRENCH WALLS ARE STABLE AS DETERMINED BY THE GEO-TECHNICAL ENGINEER. THE MIN FORMWORK SHOWN ON THE DRAWINGS IS MANDATORY TO INSURE CLEAN EXCAVATIONS IMMEDIATELY PRIOR TO AND DURING THE PLACING OF CONCRETE.
4. STAKES NOT PERMITTED IN THE FOOTING AREA.

FOOTING POURED AGAINST EARTH — 16

CLIENT
CENTERCAL PROPERTIES, LLC

COPYRIGHT:
Any reproduction or distribution for any purpose other than authorized by IBI Group is forbidden. Written dimensions shall have precedence over scaled dimensions. Contractors shall verify and be responsible for all dimensions and conditions on the job and IBI Group shall be informed of any variations from the dimensions and conditions shown on the drawing. Shop drawings shall be submitted to IBI Group for approval before proceeding with fabrication.
COPYRIGHT © 2016 IBI GROUP

ISSUES

NO.	ISSUANCE	STATUS	DATE

SEAL

EXPIRES

SUB CONSULTANT
JOHN A. MARTIN & ASSOCIATES
Structural Engineers
950 S. Grand Avenue
Los Angeles, Calif. 90015
Phone (213) 483-6490
Fax (213) 483-3084
J14261

PRIME CONSULTANT
IBI GROUP
18401 Von Karman Avenue, Suite 110
Irvine, CA 92612 United States
tel +1 949 833 5588 ext 146 fax +1 949 833 5511
ibigroup.com

PROJECT
The Village at Totem Lake - Building B
Kirkland, Washington

PROJECT NO:	J14261
DRAWN BY:	Author
CHKD' BY:	Checker
SCALE:	3/4" = 1'-0"
DATE:	05/25/16

SHEET TITLE
TYPICAL DETAILS

BLDG	SHEET NUMBER	ISSUE
B	S1001	

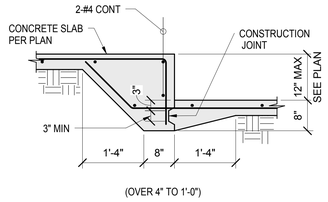

TYPICAL STEP IN SLAB ON GRADE (4)
3/4" = 1'-0"

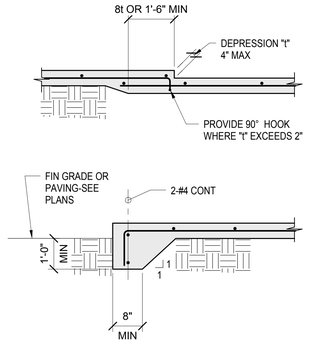

DEPRESSED SLAB ON GRADE AND SLAB EDGE (3)

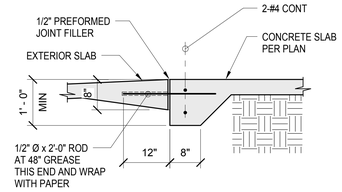

TYPICAL SLAB TOEDOWN (2)

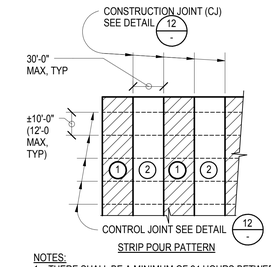

STRIP POUR PATTERN

NOTES:
1. THERE SHALL BE A MINIMUM OF 24 HOURS BETWEEN POURS 1 & 2.
2. CONSTRUCTION JOINTS MUST BE USED AT THE END OF THE DAY'S WORK AND AT EVERY 120 FEET.
3. WHERE STRIP POUR PATTERN IS NOT USED (SLAB POURED MONOLITHICALLY), PROVIDE CONTROL JOINTS @ 12'-0" OC MAXIMUM EACH WAY.

SLAB ON GRADE POUR PATTERN (1)

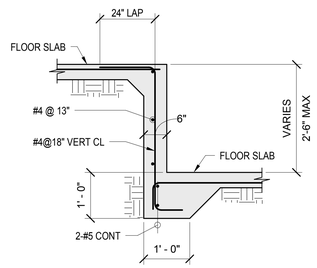

STEP IN SLAB ON GRADE (9)
3/4" = 1'-0"

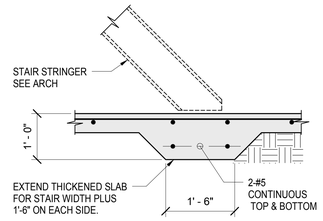

STAIR STRINGER TO SLAB ON GRADE (8)

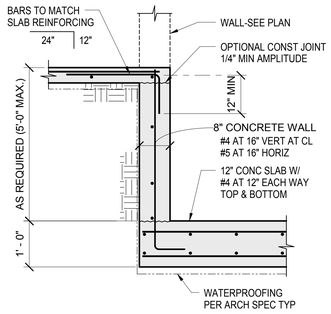

SECTION AT ELEVATOR PIT (7)

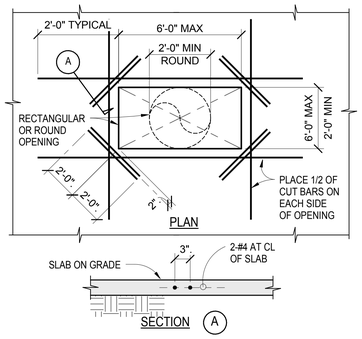

OPENING IN SLAB ON GRADE (6)

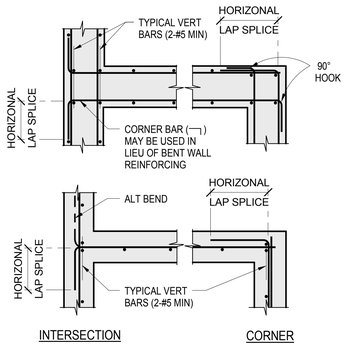

REINFORCING AT WALL INTERSECTIONS (13)
3/4" = 1'-0"

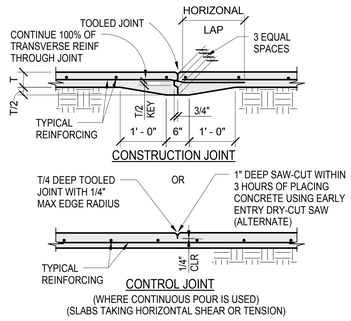

JOINTS IN SLAB ON GRADE (12)

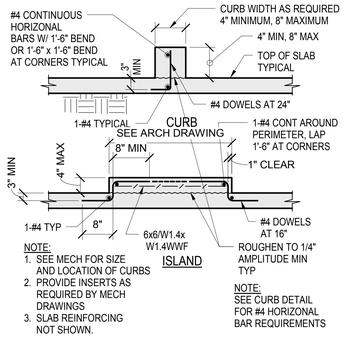

NOTE:
1. SEE MECH FOR SIZE AND LOCATION OF CURBS
2. PROVIDE INSERTS AS REQUIRED BY MECH DRAWINGS
3. SLAB REINFORCING NOT SHOWN.

NOTE:
SEE CURB DETAIL FOR #4 HORIZONAL BAR REQUIREMENTS

CONCRETE CURBS AND ISLANDS (11)

CLIENT
CENTERCAL PROPERTIES, LLC

COPYRIGHT:
Any reproduction or distribution for any purpose other than authorized by IBI Group is forbidden. Written dimensions shall have precedence over scaled dimensions. Contractors shall verify and be responsible for all dimensions and conditions on this drawing. No ambiguities or discrepancies shall be taken from the dimensions and conditions shown on the drawing. Shop drawings shall be submitted to IBI Group for approval before proceeding with fabrication.
COPYRIGHT © 2016 IBI GROUP

ISSUES

NO.	ISSUANCE	STATUS	DATE

SEAL
BARRY SCHNAPP
STATE OF WASHINGTON
21669
REGISTERED PROFESSIONAL ENGINEER
EXPIRES

SUB CONSULTANT
MARTIN & associates
JOHN A. MARTIN & ASSOCIATES
Structural Engineers
950 S. Grand Avenue
Los Angeles, Calif. 90015
Phone (213) 483-6490
Fax (213) 483-3084
J14261

PRIME CONSULTANT
IBI
IBI GROUP
18401 Von Karman Avenue, Suite 110
Irvine, CA 92612 United States
tel +1 949 833 5588 ext 146 fax +1 949 833 5511
ibigroup.com

PROJECT
The Village at Totem Lake - Building B
Kirkland, Washington

PROJECT NO:	J14261
DRAWN BY:	Author
CHKD' BY:	Checker
SCALE:	3/4" = 1'-0"
DATE:	05/25/16

SHEET TITLE
TYPICAL DETAILS

BLDG	SHEET NUMBER	ISSUE
B	S1002	

5/26/2016 12:54:31 PM C:\Users\kbrown\Documents\ATW_Totem_Bldg B_S_2016_B#rbrn.rvt

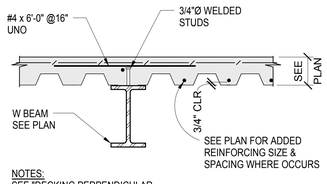

NOTES:
SEE "DECKING PERPENDICULAR TO BEAMS" FOR ADDED NOTES.

METAL DECK PARALLEL TO BEAM (4)

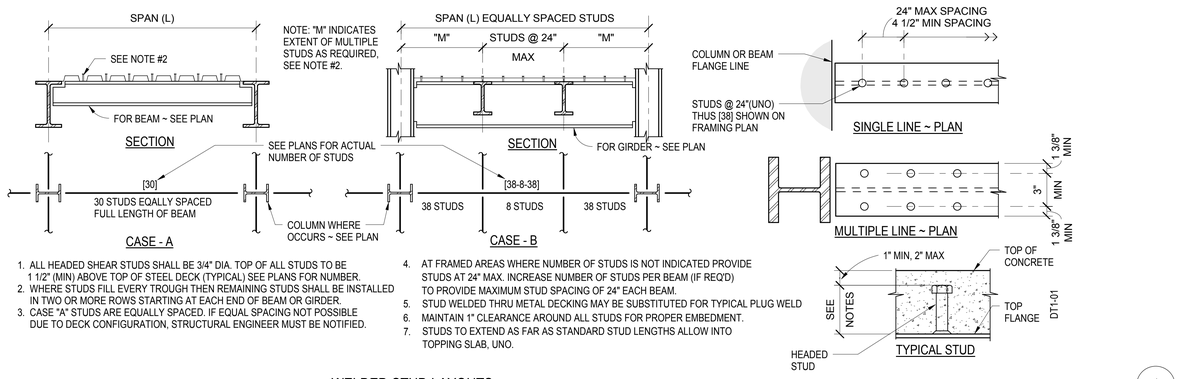

1. ALL HEADED SHEAR STUDS SHALL BE 3/4" DIA. TOP OF ALL STUDS TO BE 1 1/2" (MIN) ABOVE TOP OF STEEL DECK (TYPICAL) SEE PLANS FOR NUMBER.
2. WHERE STUDS FILL EVERY TROUGH THEN REMAINING STUDS SHALL BE INSTALLED IN TWO OR MORE ROWS STARTING AT EACH END OF BEAM OR GIRDER.
3. CASE "A" STUDS ARE EQUALLY SPACED. IF EQUAL SPACING NOT POSSIBLE DUE TO DECK CONFIGURATION, STRUCTURAL ENGINEER MUST BE NOTIFIED.
4. AT FRAMED AREAS WHERE NUMBER OF STUDS IS NOT INDICATED PROVIDE STUDS AT 24" MAX. INCREASE NUMBER OF STUDS PER BEAM (IF REQ'D) TO PROVIDE MAXIMUM STUD SPACING OF 24" EACH BEAM.
5. STUD WELDED THRU METAL DECKING MAY BE SUBSTITUTED FOR TYPICAL PLUG WELD
6. MAINTAIN 1" CLEARANCE AROUND ALL STUDS FOR PROPER EMBEDMENT.
7. STUDS TO EXTEND AS FAR AS STANDARD STUD LENGTHS ALLOW INTO TOPPING SLAB, UNO.

WELDED STUD LAYOUTS (1)

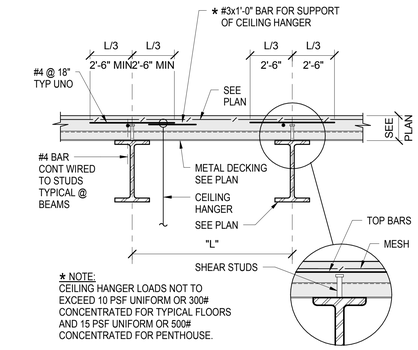

★ NOTE:
CEILING HANGER LOADS NOT TO EXCEED 10 PSF UNIFORM OR 300# CONCENTRATED FOR TYPICAL FLOORS AND 15 PSF UNIFORM OR 500# CONCENTRATED FOR PENTHOUSE.

METAL DECK PERPENDICULAR TO BEAM (10)

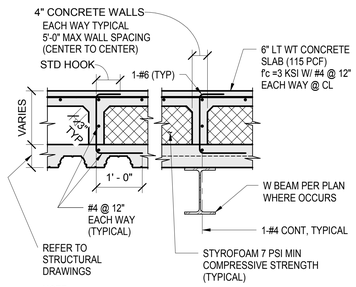

NOTE:
ALLOWABLE MECHANICAL LOAD = 80 PSF.

TYPICAL SECTIONOF BUILT-UP SLAB ON DECK (9)

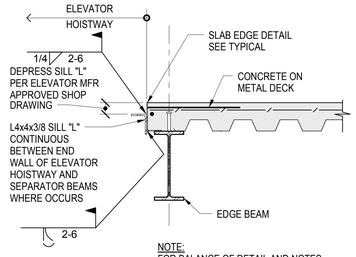

NOTE:
FOR BALANCE OF DETAIL AND NOTES SEE TYPICAL SLAB EDGE DETAIL.

TYPICAL ELEVATOR SILL ANGLE (8)

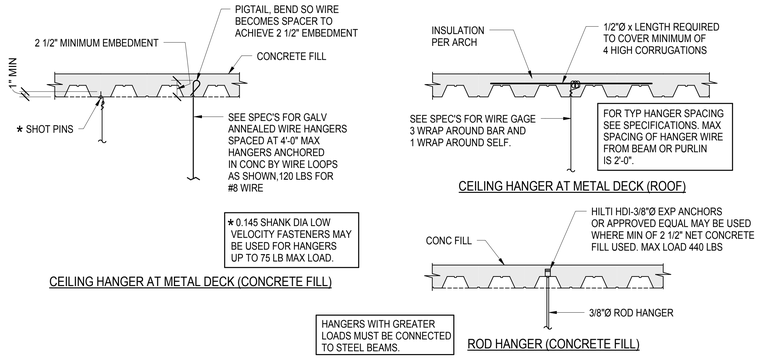

HANGER DETAILS (6)

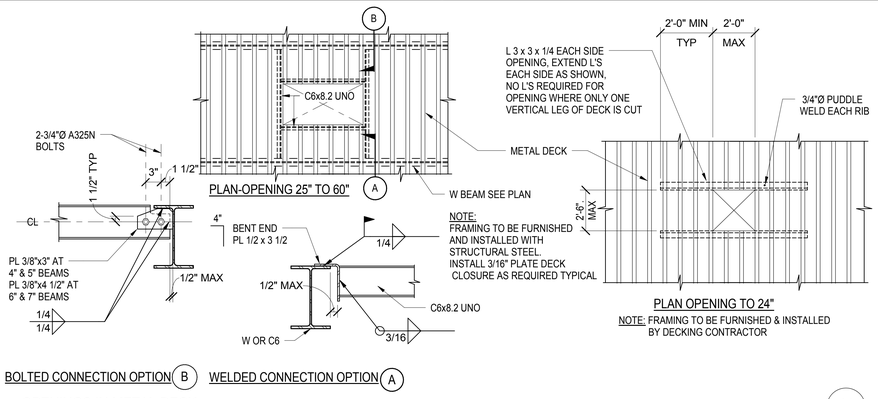

NOTE: FRAMING TO BE FURNISHED & INSTALLED BY DECKING CONTRACTOR

BOLTED CONNECTION OPTION (B) WELDED CONNECTION OPTION (A)

OPENINGS IN METAL DECK (14)

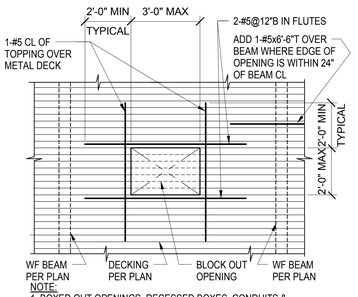

NOTE:
1. BOXED OUT OPENINGS, RECESSED BOXES, CONDUITS & PIPE SLEEVED CLUSTERS, CLOSER THAN 3" OC SHALL BE TREATED AS SLAB OPENINGS.
2. CUT DECK OPENING AFTER CONCRETE HAS ATTAINED 28 DAY DESIGN STRENGTH

UNFRAMED FLOOR OPENING WITH CONCRETE FILL (13)

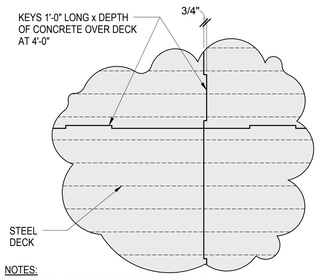

NOTES:
1. SLAB REINFORCING CONTINUOUS THRU JOINT.
2. CONSTRUCTION JOINT LOCATION TO BE SUBMITTED FOR REVIEW.
3. LIMIT CONC POUR RATIO TO 2 MAX:1 (LENGTH TO WIDTH)

CONSTRUCTION JOINT IN CONCRETE SLAB ON COMPOSITE METAL DECK (12)

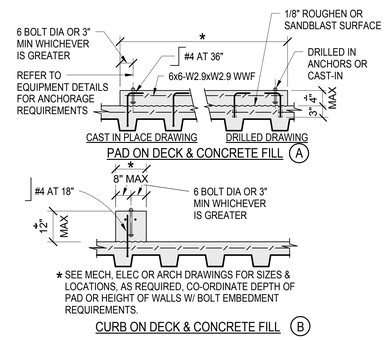

★ SEE MECH, ELEC OR ARCH DRAWINGS FOR SIZES & LOCATIONS, AS REQUIRED, CO-ORDINATE DEPTH OF PAD OR HEIGHT OF WALLS W/ BOLT EMBEDMENT REQUIREMENTS.

CONCRETE EQUIPMENT SUPPORTS (11)

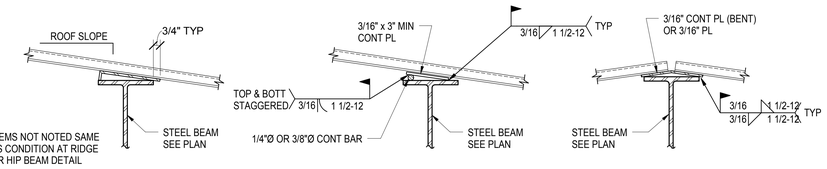

AT BEAM PERPENDICULAR TO DECK SPAN

ALTERNATE CONNECTION AT BEAM PERPENDICULAR TO DECK SPAN

AT RIDGE OR HIP BEAM

NOTE: USE BENT PL WHEN DECK SLOPE RELATIVE TO ROOF BEAM IS 1/2" TO 12" AND GREATER.

DETAIL FOR LEVEL BEARING OF METAL DECK (19)
3/4" = 1'-0"

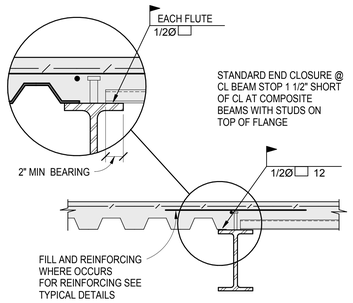

METAL DECK DIRECTION CHANGE ON CENTER LINE BEAM (18)
3/4" = 1'-0"

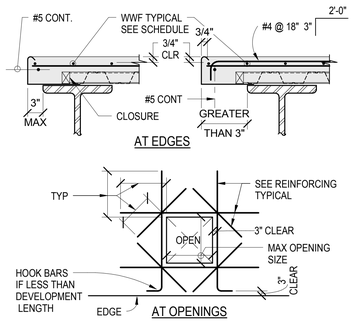

TOPPING TRIM REINFORCING (17)

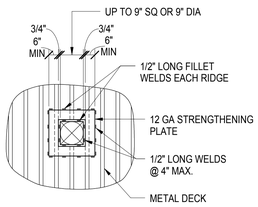

SMALL REINFORCED DECK OPENING UP TO 9" MAX. (16)

CLIENT
CENTERCAL PROPERTIES, LLC

COPYRIGHT:
Any reproduction or distribution for any purpose other than authorized by IBI Group is forbidden. Written dimensions shall have precedence over scaled dimensions. Contractors shall verify and be responsible for all dimensions and conditions on site. IBI Group must be notified of any variations from the dimensions and conditions shown on the drawing. Shop drawings shall be submitted to IBI Group for approval before proceeding with fabrication.
COPYRIGHT © 2016 IBI GROUP

ISSUES

NO.	ISSUANCE	STATUS	DATE
1	STRUCTURAL ADDENDUM 1		05/25/16

SEAL
EXPIRES

SUB CONSULTANT
JOHN A. MARTIN & ASSOCIATES
Structural Engineers
950 S. Grand Avenue
Los Angeles, Calif. 90015
Phone (213) 483-6490
Fax (213) 483-3084
J14261

PRIME CONSULTANT
IBI GROUP
18401 Von Karman Avenue, Suite 110
Irvine, CA 92612 United States
tel +1 949 833 5588 ext 146 fax +1 949 833 5511
ibigroup.com

PROJECT
The Village at Totem Lake - Building B
Kirkland, Washington

PROJECT NO:	J14261
DRAWN BY:	Author
CHK'D BY:	Checker
SCALE:	3/4" = 1'-0"
DATE:	05/25/16

SHEET TITLE
TYPICAL DETAILS

BLDG	SHEET NUMBER	ISSUE
B	S1003	

5/26/2016 12:24:03 PM C:\Users\Mike\Dropbox\Dropbox\JATV_Totem_Bldg\B-S_2016_Mike.rvt

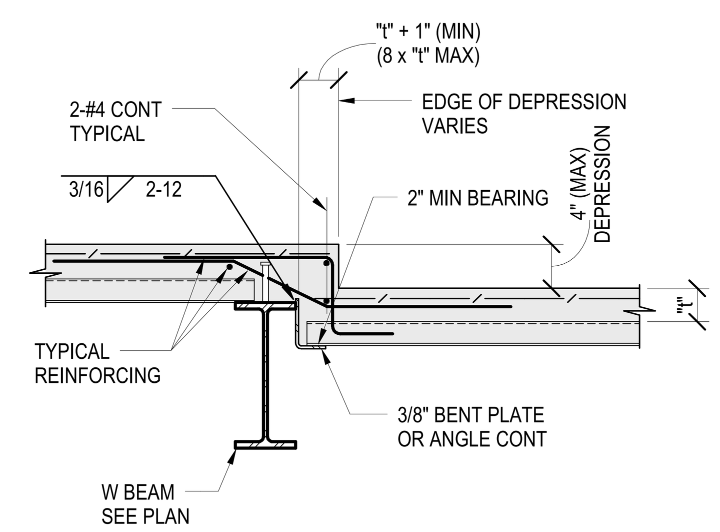

METAL DECK FLUTES PERPENDICULAR TO BEAM SUPPORT (5)

3/4" = 1'-0"

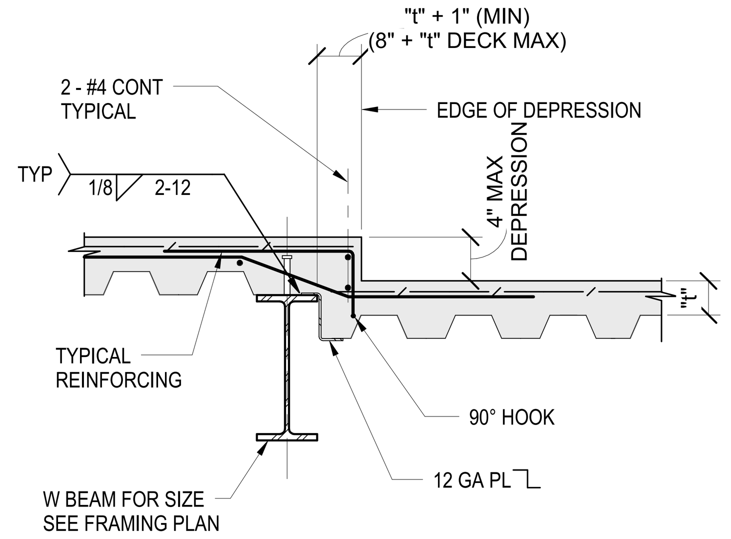

METAL DECK FLUTES PARALLEL TO BEAM SUPPORT (10)

3/4" = 1'-0"

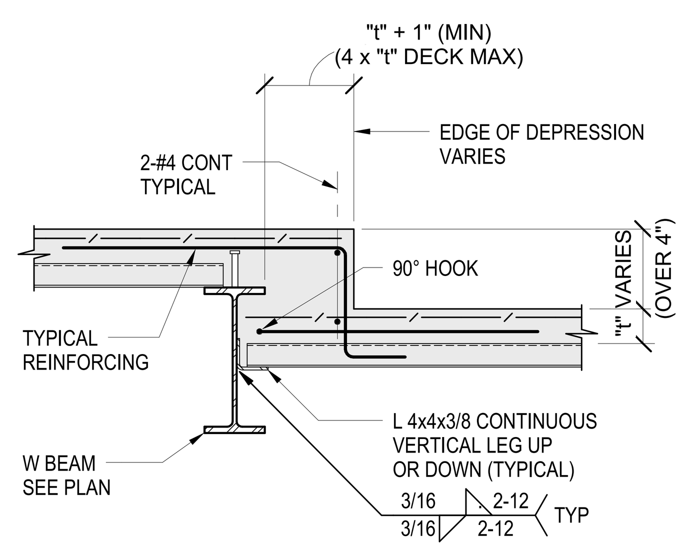

METAL DECK FLUTES PERPENDICULAR TO BEAM

DEEP DEPRESSIONS - GREATER THAN 4 INCHES (15)

3/4" = 1'-0"

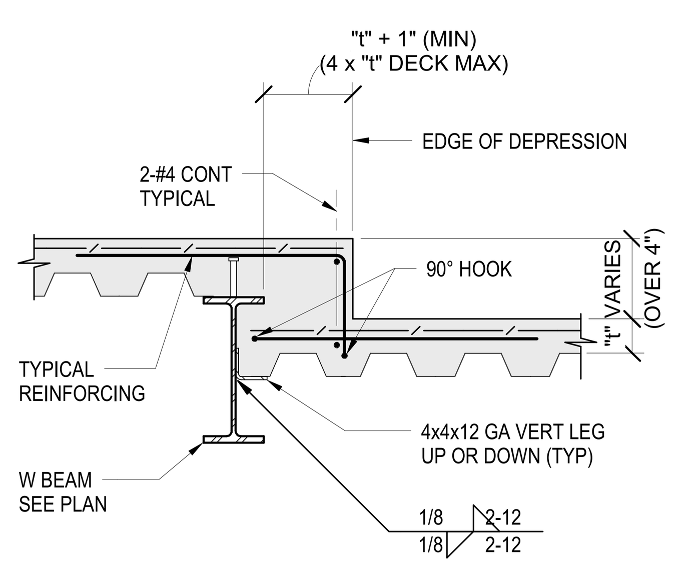

METAL DECK FLUTES PARALLEL TO BEAM

DEEP DEPRESSIONS - GREATER THAN 4 INCHES (20)

3/4" = 1'-0"

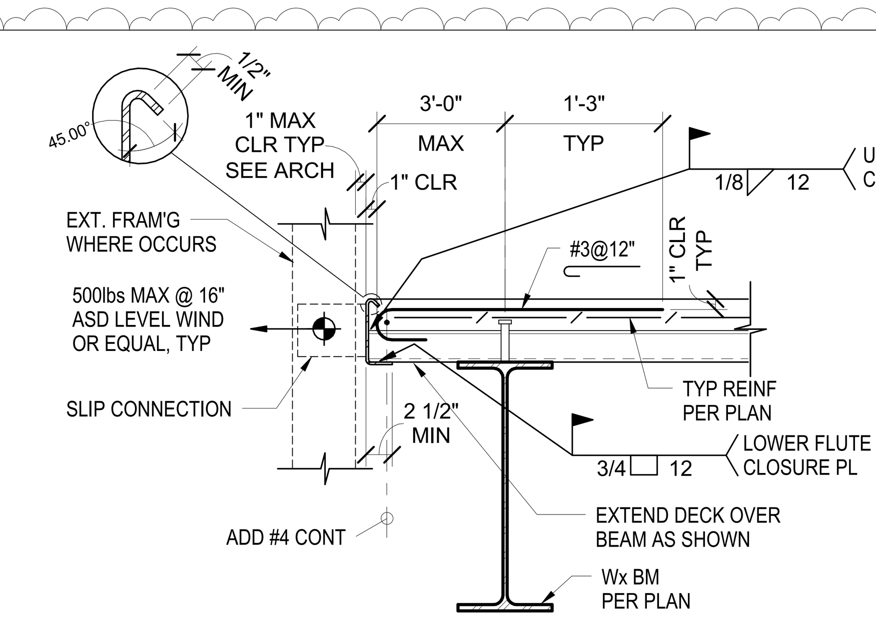

DECK PERPENDICULAR TO EDGE BEAM (SLIP CONNECTION ONLY) (A)

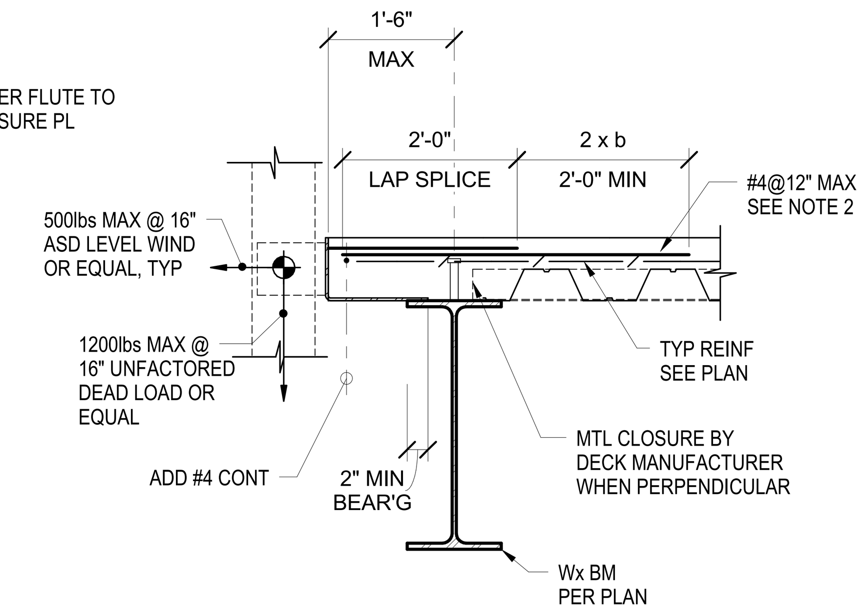

DECK PARALLEL OR PERPENDICULAR TO EDGE BEAM (B)

SEE A/- FOR ADDITIONAL INFORMATION

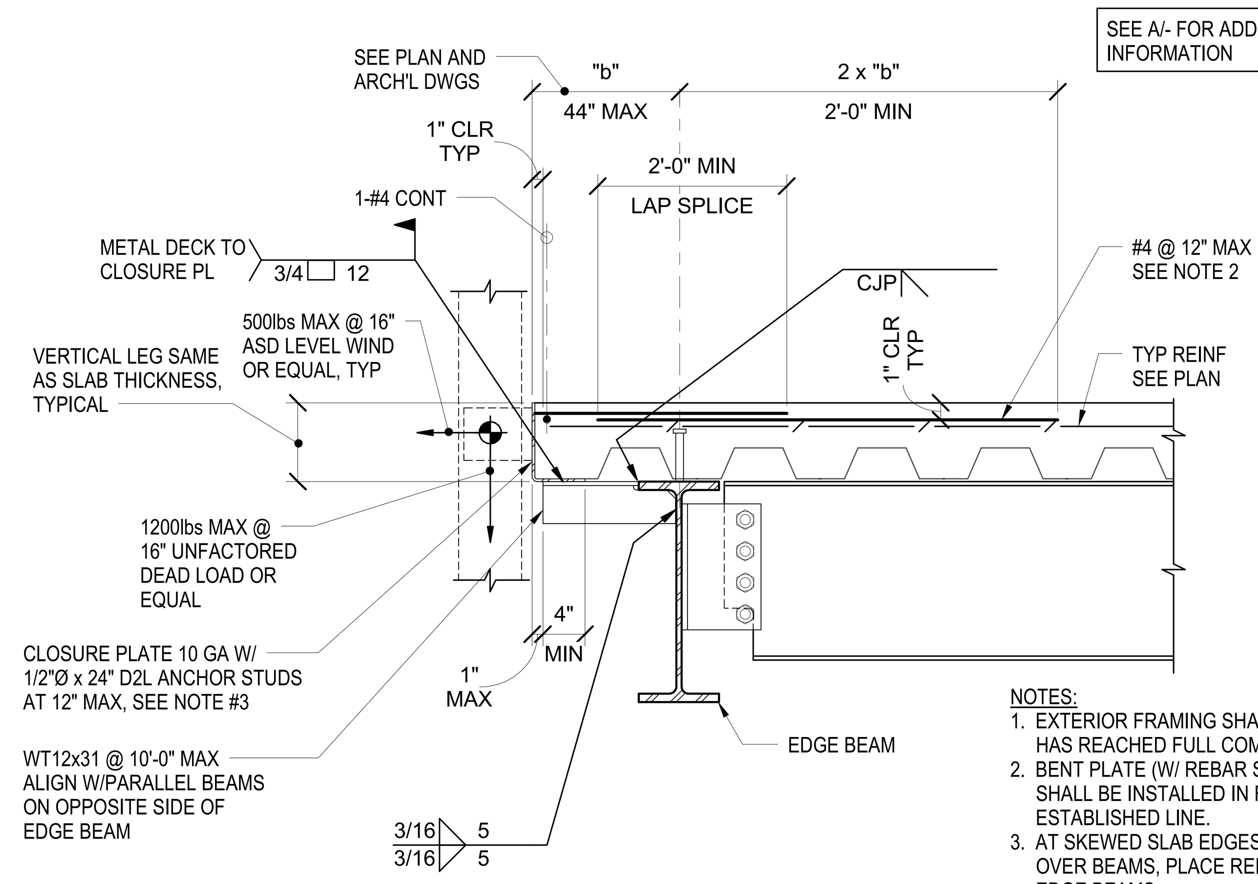

DECK PARALLEL TO SLAB EDGE (C)

NOTES:
1. EXTERIOR FRAMING SHALL NOT BE INSTALLED UNTIL CONCRETE HAS REACHED FULL COMPRESSIVE STRENGTH.
2. BENT PLATE (W/ REBAR STUDS) AT ALL SPANDREL SLAB BEAMS SHALL BE INSTALLED IN FIELD TO AN INSTRUMENT ESTABLISHED LINE.
3. AT SKEWED SLAB EDGES, WHERE DECK RUNS DIAGONALLY OVER BEAMS, PLACE REINFORCING BARS PERPENDICULAR TO EDGE BEAMS
4. ALL DEFORMED BAR ANCHOR STUDS SHALL BE WELDED W/ AUTOMATICALLY TIMED STUD WELDING EQUIPMENT IN THE FIELD.

TYP DECK EDGE AT FLOOR (8)

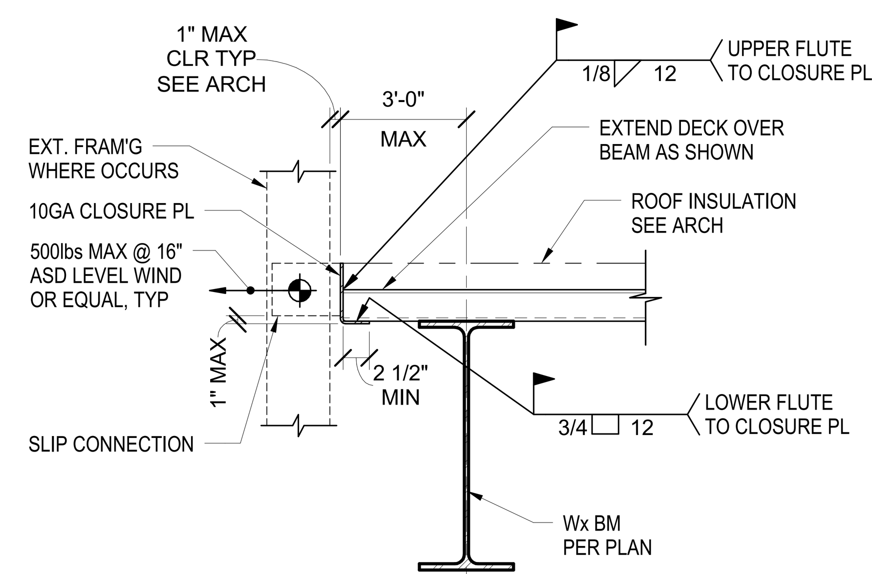

DECK PERPENDICULAR TO EDGE BEAM (A)

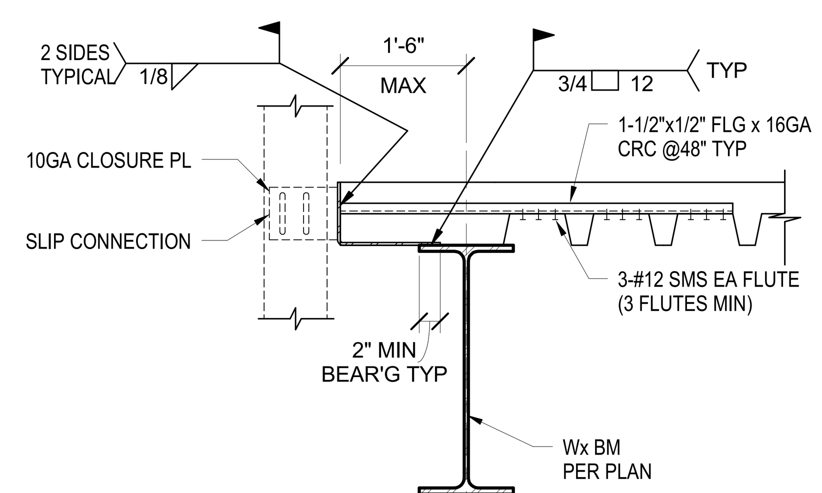

DECK PARALLEL TO EDGE BEAM - OVERHANG < 1'-6" (B)

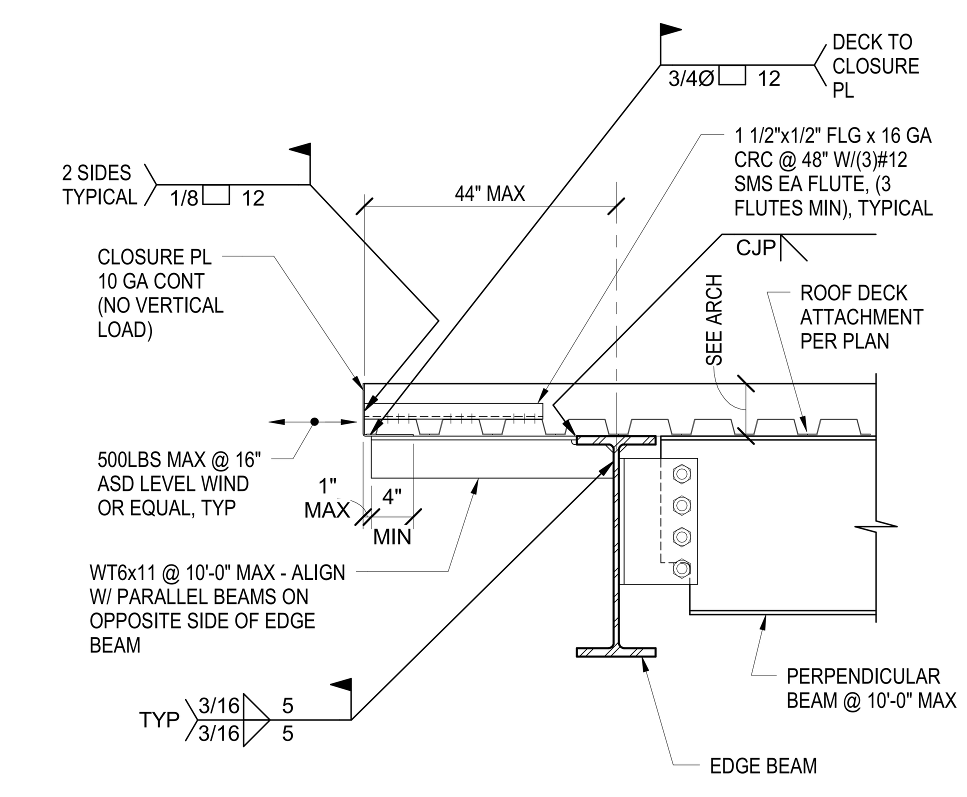

DECK PARALLEL TO EDGE BEAM OVERHANG > 1'-6" (C)

TYP DECK EDGE AT ROOF (18)

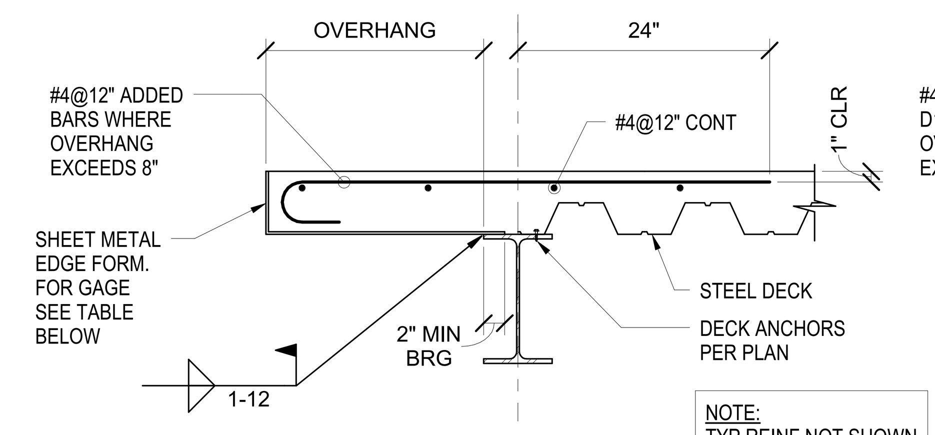

AT EDGE
DECK PARALLEL

NOTE:
TYP REINF NOT SHOWN FOR CLARITY.

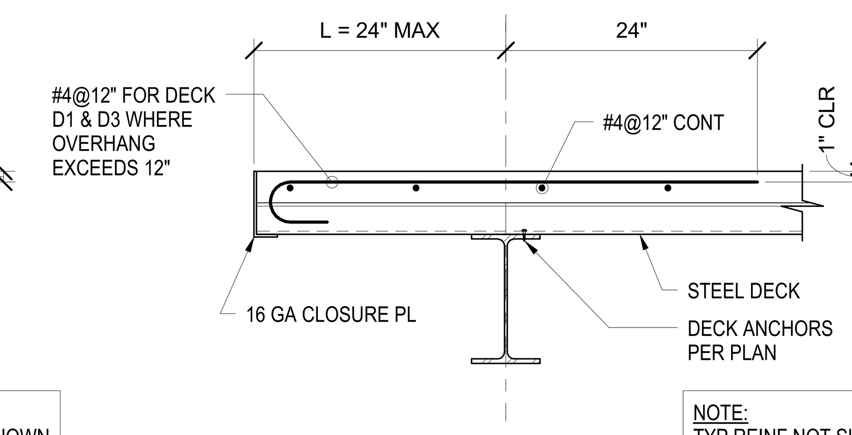

AT EDGE
DECK PERPENDICULAR

NOTE:
TYP REINF NOT SHOWN FOR CLARITY.

TYPICAL EDGE OF STEEL DECK OVERHANG (NO EXTERNAL LOADING) (1)

1" = 1'-0"

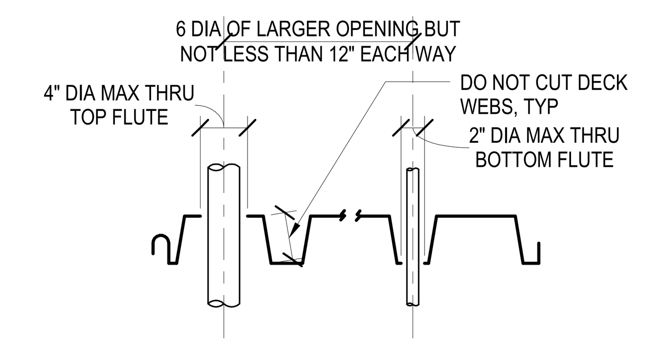

TYPE B DECK

IF OPENING ARE CLOSER OR LARGER THAN SHOWN, REINFORCE DECK - SEE OTHER DETAILS

UNREINFORCED OPENING AT METAL DECK WITHOUT TOPPING (7)

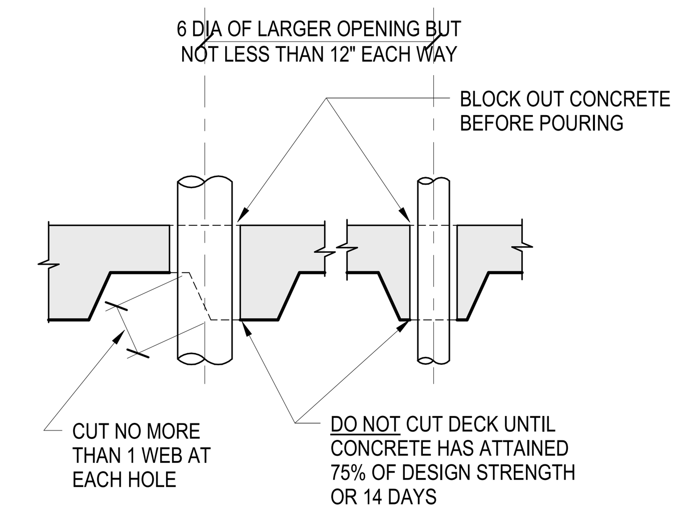

IF OPENING ARE CLOSER OR LARGER THAN SHOWN, REINFORCE DECK - SEE OTHER DETAILS

UNREINFORCED OPENING AT METAL DECK WITH CONCRETE TOPPING (6)

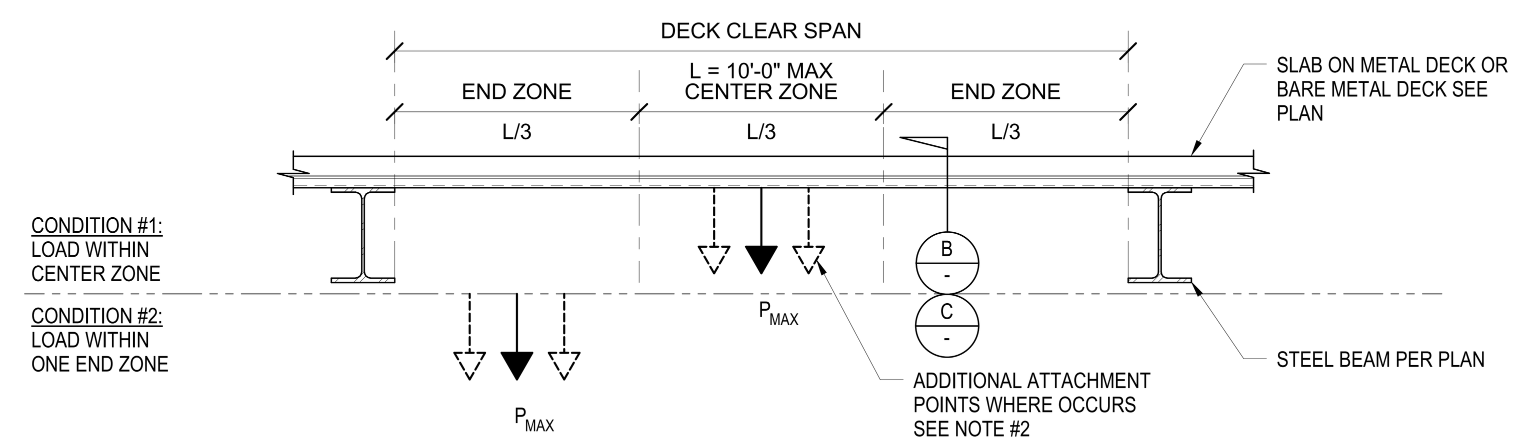

LOADING ZONES ON DECK SPAN BETWEEN BEAMS (A)

NOTES:
1. P_{MAX} REPRESENTS THE TOTAL SERVICE LEVEL LOAD THAT CAN BE APPLIED TO THE UNDERSIDE OF A DECK IN ONE ZONE (SEE DETAIL 'A').
2. P_{MAX} CAN BE A SINGLE LOAD OR THE TOTAL LOAD FROM MULTIPLE ATTACHMENTS IN ONE ZONE.
3. WHERE MULTIPLE ATTACHMENTS OCCUR OVER MULTIPLE ZONES ON THE SAME SPAN, THE TOTAL LOAD SHALL NOT EXCEED P_{MAX} FOR THE CONDITION #1.
4. P_{MAX} LOADS SHALL BE HALVED WHEN IT OCCURS UNDER MECHANICAL UNITS.
5. P_{MAX} CAPACITIES MAY BE LIMITED BY THE TENSION CAPACITY OF THE ATTACHMENT WHICH SHALL BE DETERMINED BY OTHERS.

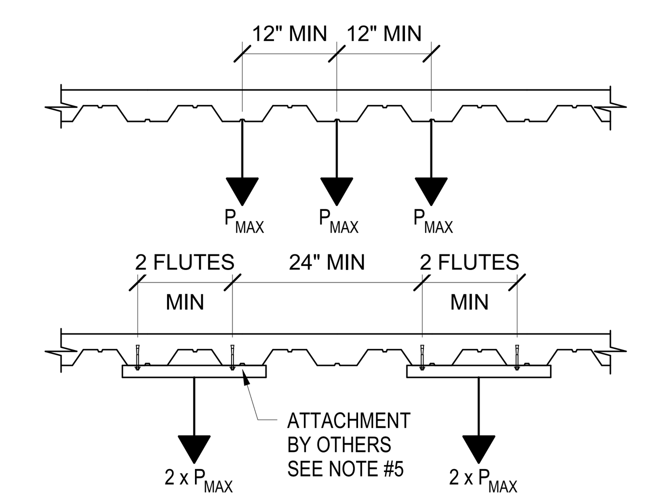

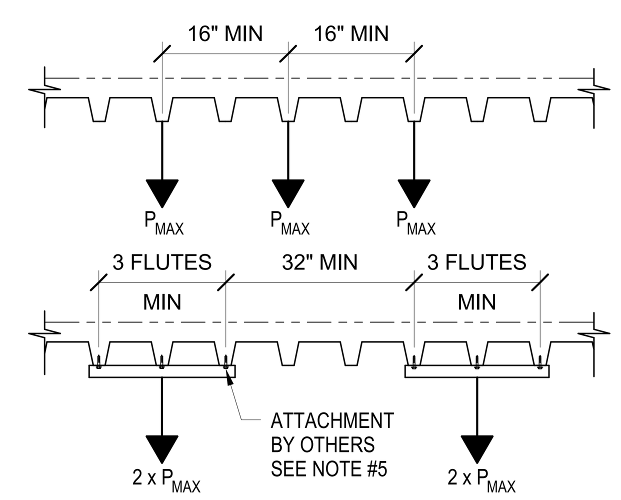

P_{MAX} GRAVITY ONLY		
MAX SPAN	VERCO W2 FORMLOK 20 GA GALV WITH 3 1/4" LW CONC TOPPING	
	CONDITION 1	CONDITION 1
10'-0"	500	550
9'-0"	600	700
8'-0"	750	850
7'-0"	850	950
6'-0"	850	950

P_{MAX} GRAVITY + SEISMIC		
MAX SPAN	VERCO W2 FORMLOK 20 GA GALV WITH 3 1/4" LW CONC TOPPING	
	CONDITION 1	CONDITION 1
10'-0"	800	900
9'-0"	950	1050
8'-0"	1150	1300
7'-0"	1250	1400
6'-0"	1250	1400

ALLOWABLE POINT LOADING AT CONCRETE TOPPED METAL DECK (B)

P_{MAX} GRAVITY ONLY		
MAX SPAN	VERCO PLN3 ROOF DECK 18 GA GALV UNSHORED (2 SPANS MIN)	
	CONDITION 1	CONDITION 1
10'-0"	200	250
9'-0"	300	350
8'-0"	350	400
7'-0"	450	500
6'-0"	450	500

P_{MAX} GRAVITY + SEISMIC		
MAX SPAN	VERCO PLN3 ROOF DECK 18 GA GALV UNSHORED (2 SPANS MIN)	
	CONDITION 1	CONDITION 1
10'-0"	300	350
9'-0"	400	450
8'-0"	500	550
7'-0"	600	700
6'-0"	600	700

ALLOWABLE POINT LOADING AT UNTOPPED METAL DECK (C)

ALLOWABLE POINT LOADING ON STRUCTURAL CONCRETE TOPPED AND UNTOPPED BARE DECKS (16)

CLIENT

CENTERCAL PROPERTIES, LLC

COPYRIGHT:

Any reproduction or distribution for any purpose other than authorized by IBI Group is forbidden. Written dimensions shall have precedence over scaled dimensions. Contractors shall verify and be responsible for all dimensions and conditions on the job and IBI Group shall be informed of any variations from the dimensions and conditions shown on the drawing. Shop drawings shall be submitted to IBI Group for approval before proceeding with fabrication.

COPYRIGHT © 2016 IBI GROUP

ISSUES

NO.	ISSUANCE	STATUS	DATE
1	STRUCTURAL ADDENDUM 1		05/25/16

SEAL

EXPIRES

SUB CONSULTANT

MARTIN & associates
JOHN A. MARTIN & ASSOCIATES
Structural Engineers
950 S. Grand Avenue
Los Angeles, Calif. 90015
Phone (213) 483-6490
Fax (213) 483-3084
J14261

PRIME CONSULTANT

IBI GROUP
18401 Von Karman Avenue, Suite 110
Irvine, CA 92612 United States
tel +1 949 833 5588 ext 146 fax +1 949 833 5511
ibigroup.com

PROJECT

The Village at Totem Lake - Building B
Kirkland, Washington

PROJECT NO:	J14261
DRAWN BY:	Author
CHK'D BY:	Checker
SCALE:	As indicated
DATE:	05/25/16

SHEET TITLE

TYPICAL DETAILS

BLDG: B
SHEET NUMBER: S1004
ISSUE

5/26/2016 12:54:04 PM
C:\Users\jkirkley\Documents\TW_Totem_BldgB_5_2016_jkirkley.rvt

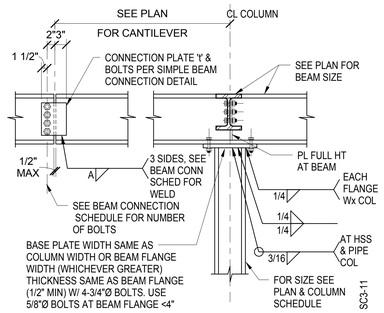

TYPICAL CANTILEVER BEAM DETAIL (5)

3/4" = 1'-0"

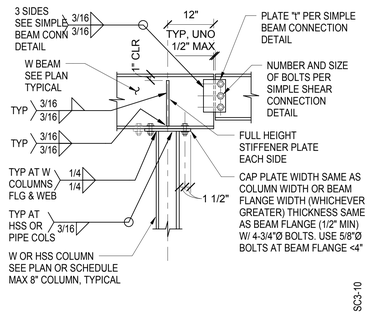

TYPICAL WF BEAM OVER THE TOP OF HSS/ WF COLUMN DETAIL (4)

3/4" = 1'-0"

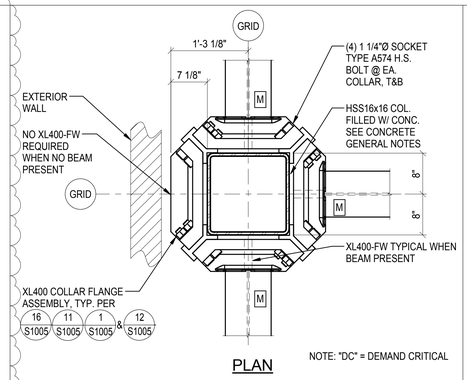

PLAN

XL400 MOMENT COLLAR CONNECTION (3)

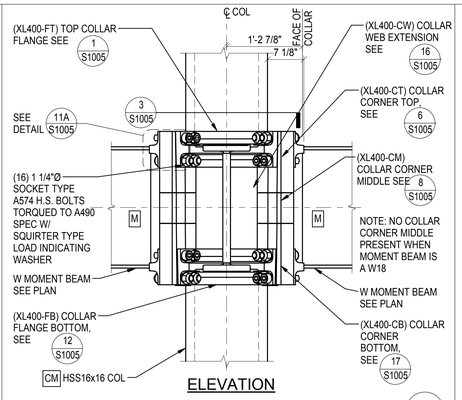

ELEVATION

XL400 MOMENT COLLAR CONNECTION (2)

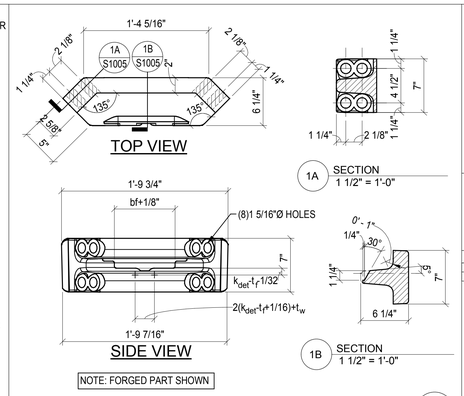

COLLAR FLANGE TOP DETAIL (XL400-FT) (1)

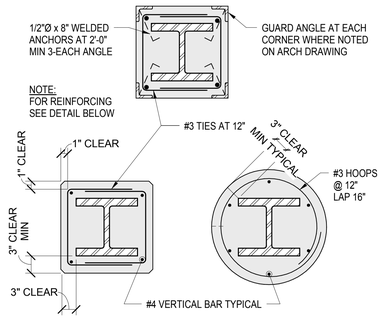

WF COLUMN CONCRETE ENCASED (9)

3/4" = 1'-0"

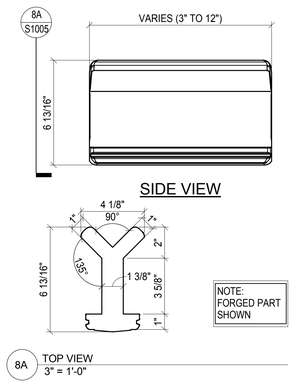

COLLAR CORNER MIDDLE DETAIL (XL400-CM) (8)

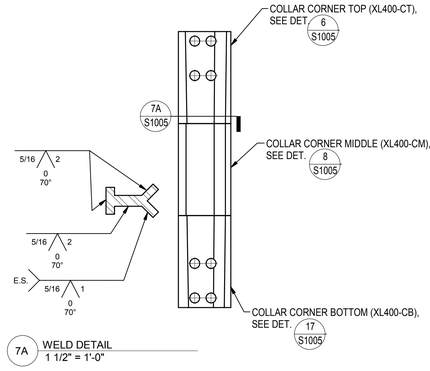

COLLAR CORNER ASSEMBLY DETAIL (7)

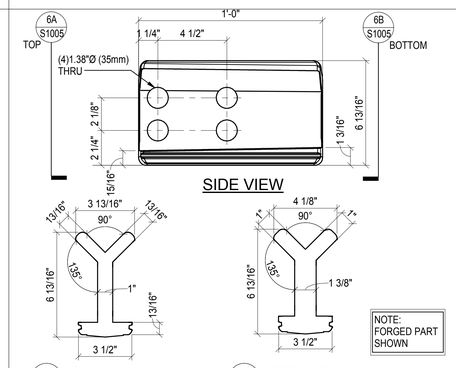

COLLAR CORNER TOP DETAIL (XL400-CT) (6)

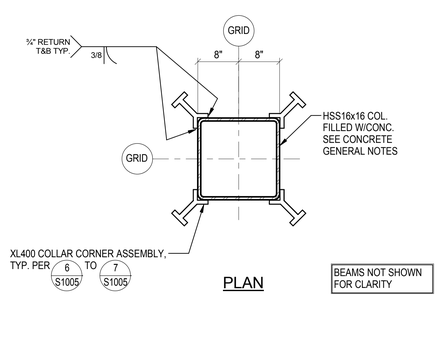

COLLAR CORNER ASSEMBLY TO COLUMN CONNECTION (13)

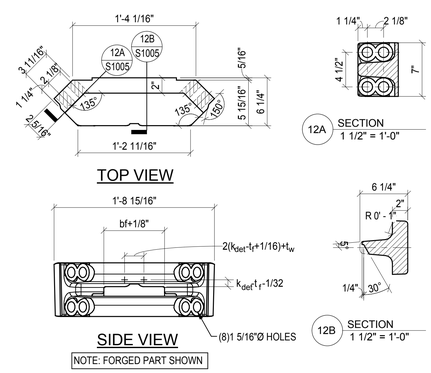

COLLAR FLANGE BOTTOM DETAIL (XL400-FB) (12)

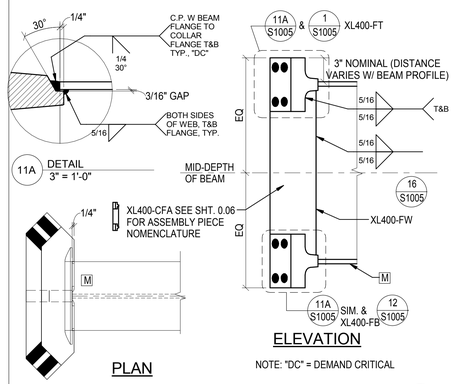

COLLAR FLANGE ASSEMBLY(XL400-CFA) (11)

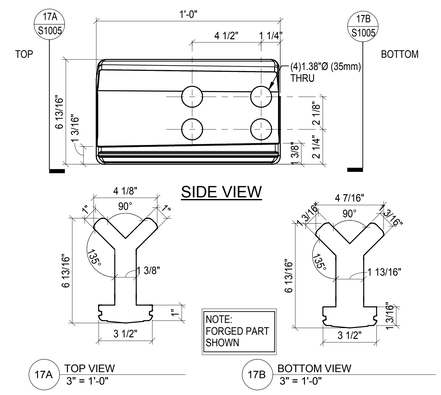

COLLAR CORNER BOTTOM DETAIL (XL400-CB) (17)

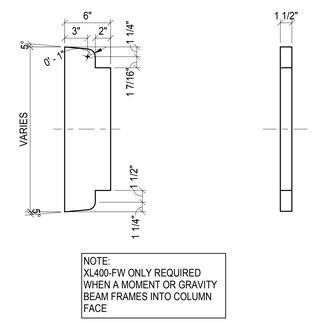

COLLAR WEB EXTENSION DETAIL (XL400-FW) (16)

CLIENT

CENTERCAL PROPERTIES, LLC

COPYRIGHT:

Any reproduction or distribution for any purpose other than authorized by IBI Group is forbidden. Written dimensions shall have precedence over scaled dimensions. Contractors shall verify and be responsible for all dimensions and conditions on site. IBI Group shall be notified of any variations from the dimensions and conditions shown on the drawing. Shop drawings shall be submitted to IBI Group for approval before proceeding with fabrication.

COPYRIGHT © 2016 IBI GROUP

ISSUES

NO.	ISSUANCE	STATUS	DATE
1	STRUCTURAL ADDENDUM 1		05/25/16

SEAL

BARRY SCHNITZER — STATE OF WASHINGTON — 21669 — REGISTERED PROFESSIONAL ENGINEER

EXPIRES

SUB CONSULTANT

MARTIN & associates
JOHN A. MARTIN & ASSOCIATES
Structural Engineers
950 S. Grand Avenue
Los Angeles, Calif. 90015
Phone (213) 483-6490
Fax (213) 483-3084
J14261

PRIME CONSULTANT

IBI
IBI GROUP
18401 Von Karman Avenue, Suite 110
Irvine, CA 92612 United States
tel +1 949 833 5588 ext 146 fax +1 949 833 5511
ibigroup.com

PROJECT

The Village at Totem Lake - Building B

Kirkland, Washington

PROJECT NO:	J14261
DRAWN BY:	Author
CHKD BY:	Checker
SCALE:	As indicated
DATE:	05/25/16

SHEET TITLE

TYPICAL DETAILS

BLDG	SHEET NUMBER	ISSUE
B	S1005	

5/26/2016 12:54:06 PM C:\Users\bkirton\Documents\ATW_Totem_Bldg B_S_2016_bkirton.rvt

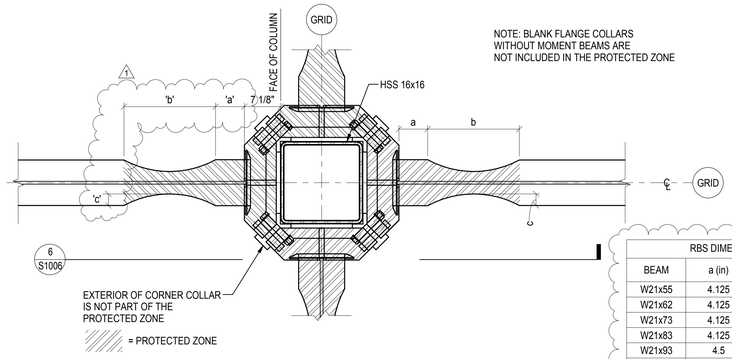

NOTE: BLANK FLANGE COLLARS WITHOUT MOMENT BEAMS ARE NOT INCLUDED IN THE PROTECTED ZONE

RBS DIMENSION SCHEDULE			
BEAM	a (in)	b (in)	c (in)
W21x55	4.125	13.5	2
W21x62	4.125	13.625	2
W21x73	4.125	13.75	2.125
W21x83	4.125	13.875	2.125
W21x93	4.5	14	2.125
W21x101	6.125	13.875	3.125

REDUCED BEAM SECTIONB(RBS) TOP VIEW

1

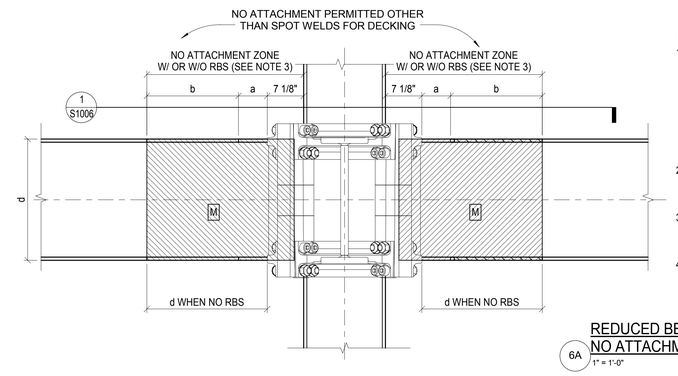

NOTES:

1. SPECIAL INSPECTION SHALL BE IN ACCORDANCE WITH 2013 CBC, CHAPTER 17 AND AWS D1.1. VISUAL INSPECTION MEANS THE INSPECTOR VISUALLY INSPECTS THE WELDING FOR ADHERENCE TO THE APPROVED WELD PROCEDURE STARTING WITH FIT-UP AND PROCEEDING THROUGH THE WELDING PROCESS. CONTINUOUS OBSERVATION IS NOT REQUIRED.
2. METAL DECK CAN BE SPOT WELDED IN PROTECTED ZONE. ELECTRODE USED IN PROTECTED ZONE SHALL BE LOW HYDROGEN.
3. SHEAR STUDS, MECHANICAL DECK FASTENERS, PENETRATIONS, AND FASTENERS TO THE BEAM WITHIN THE PROTECTED ZONE ARE PROHIBITED.
4. CONTRACTOR'S OPTION TO PAINT PROTECTED ZONE WITH NOTE, "NO ATTACHMENT ZONE".

REDUCED BEAM SECTION DETAIL (RBS) & NO ATTACHMENT ZONE

6A 1" = 1'-0"

REDUCED BEAM SECTION (RBS)

6

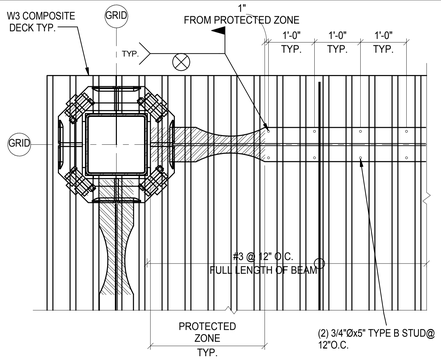

TORSIONAL BRACING - DECK PERPENDICULAR TO MOMENT BEAM AT CONCRETE TOPPED DECKS

12

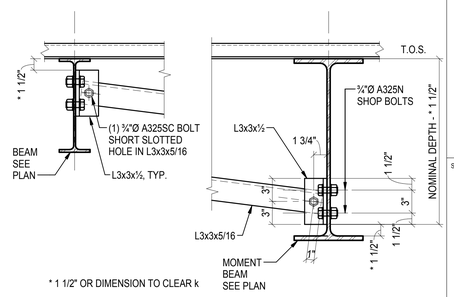

TORSIONAL BRACING - DECK PERPENDICULAR TO MOMENT BEAM AT UNTOPPED METAL DECKS

11

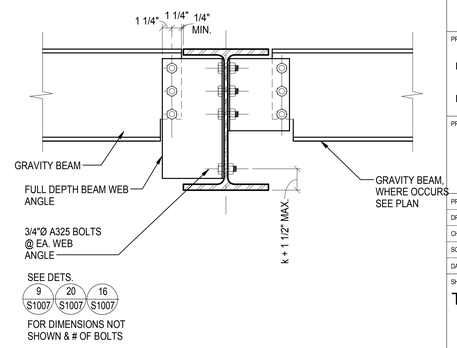

TORSIONAL BRACING - DECK PARALLEL TO MOMENT BEAM

16

CLIENT

CENTERCAL PROPERTIES, LLC

COPYRIGHT:

Any reproduction or distribution for any purpose other than authorized by IBI Group is forbidden. Written dimensions shall have precedence over scaled dimensions. Contractors shall verify and be responsible for all dimensions and conditions on the job, and IBI Group must be informed of any variation from the dimensions and conditions shown on the drawing. Shop drawings shall be submitted to IBI Group for approval before proceeding with fabrication.

COPYRIGHT © 2016 IBI GROUP

ISSUES

NO.	ISSUANCE	STATUS	DATE
1	STRUCTURAL ADDENDUM 1		05/25/16

SEAL

EXPIRES

SUB CONSULTANT

MARTIN & associates
JOHN A. MARTIN & ASSOCIATES
Structural Engineers
950 S. Grand Avenue
Los Angeles, Calif. 90015
Phone (213) 483-6490
Fax (213) 483-3084
J14261

PRIME CONSULTANT

IBI
IBI GROUP
18401 Von Karman Avenue, Suite 110
Irvine, CA 92612 United States
tel +1 949 833 5588 ext 146 fax +1 949 833 5511
ibigroup.com

PROJECT

The Village at Totem Lake - Building B

Kirkland, Washington

PROJECT NO:	J14261
DRAWN BY:	Author
CHKD BY:	Checker
SCALE:	As indicated
DATE:	05/25/16

SHEET TITLE

TYPICAL DETAILS

BLDG	SHEET NUMBER	ISSUE
B	S1006	

5/26/2016 12:54:07 PM C:\Users\bkelson\Documents\ATV_Totem_Bldg B_S_2016_bkelson.rvt

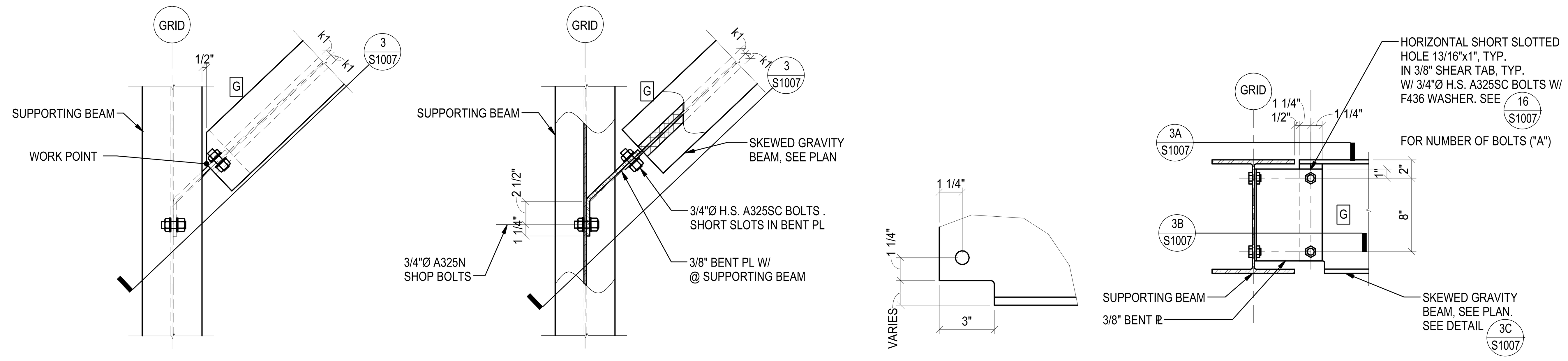

3A PLAN VIEW - TOP FLANGE
1 1/2" = 1'-0"

3B PLAN VIEW - MID DEPTH
1 1/2" = 1'-0"

3C DETAIL
3" = 1'-0"

SKEWED GRAVITY BEAM CONNECTION — 3

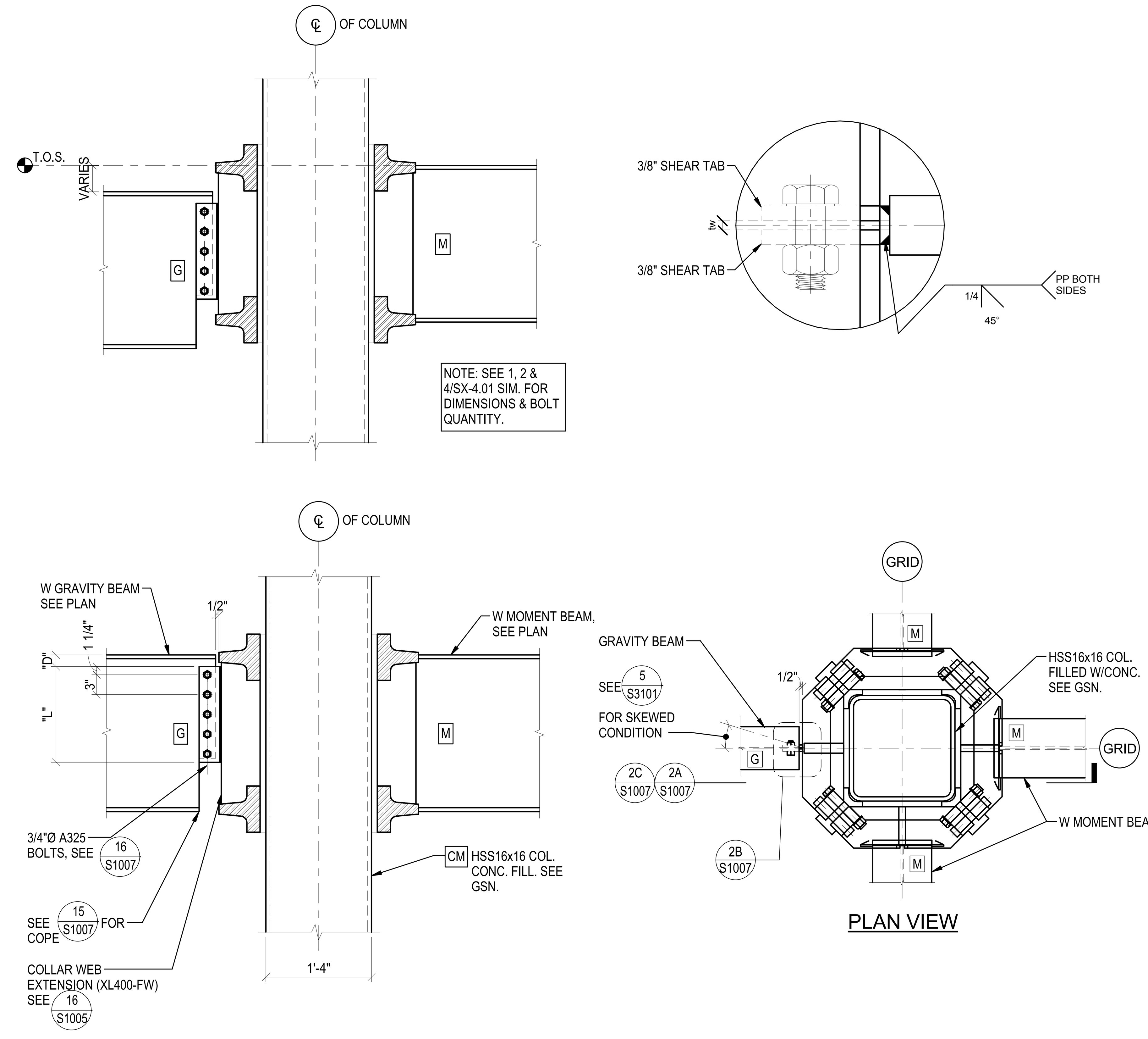

SHEAR TAB GRAVITY CONNECTION TO XL400 MOMENT COLLAR — 6

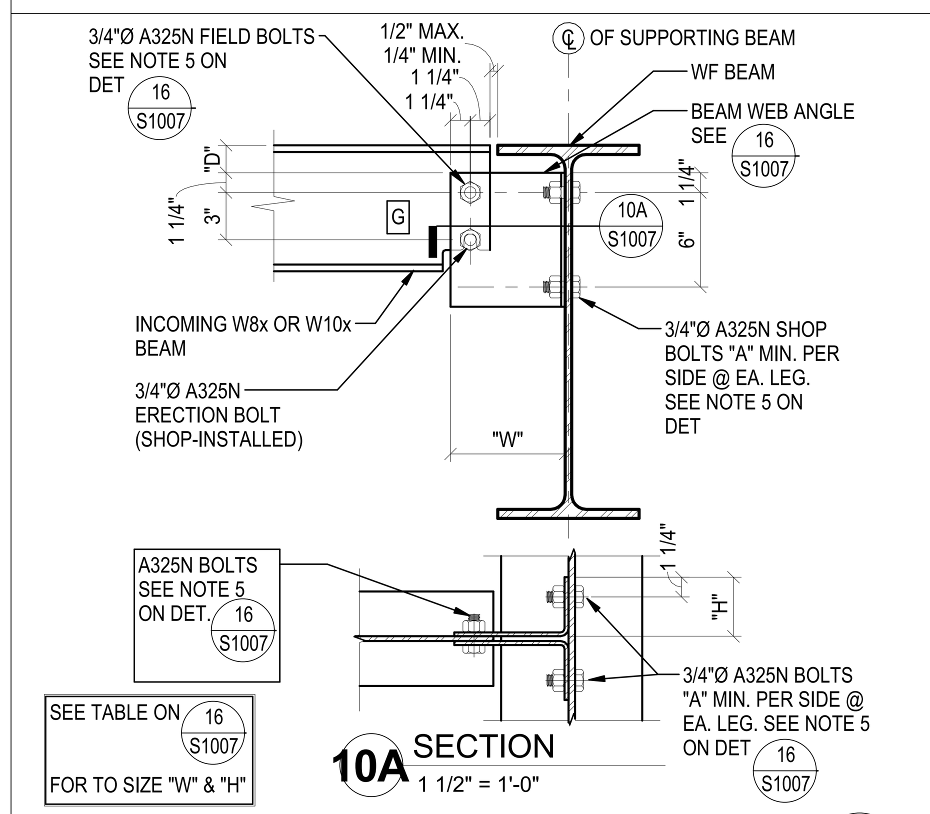

10A SECTION
1 1/2" = 1'-0"

W8 AND W10 GRAVITY CONNECTION — 10

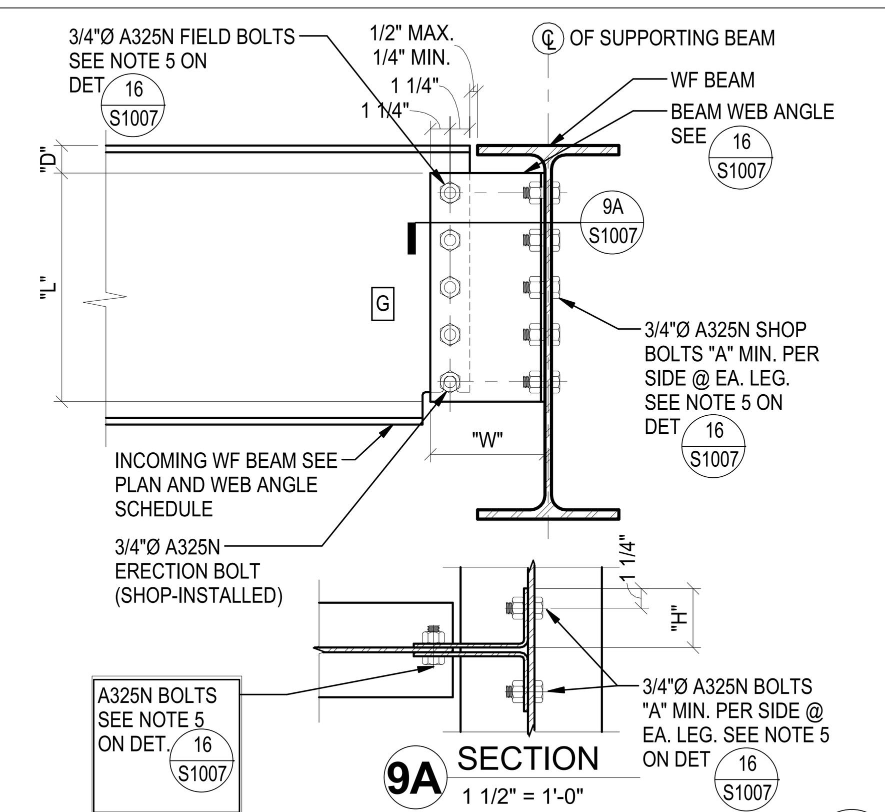

9A SECTION
1 1/2" = 1'-0"

BEAM TO BEAM GRAVITY CONNECTION — 9

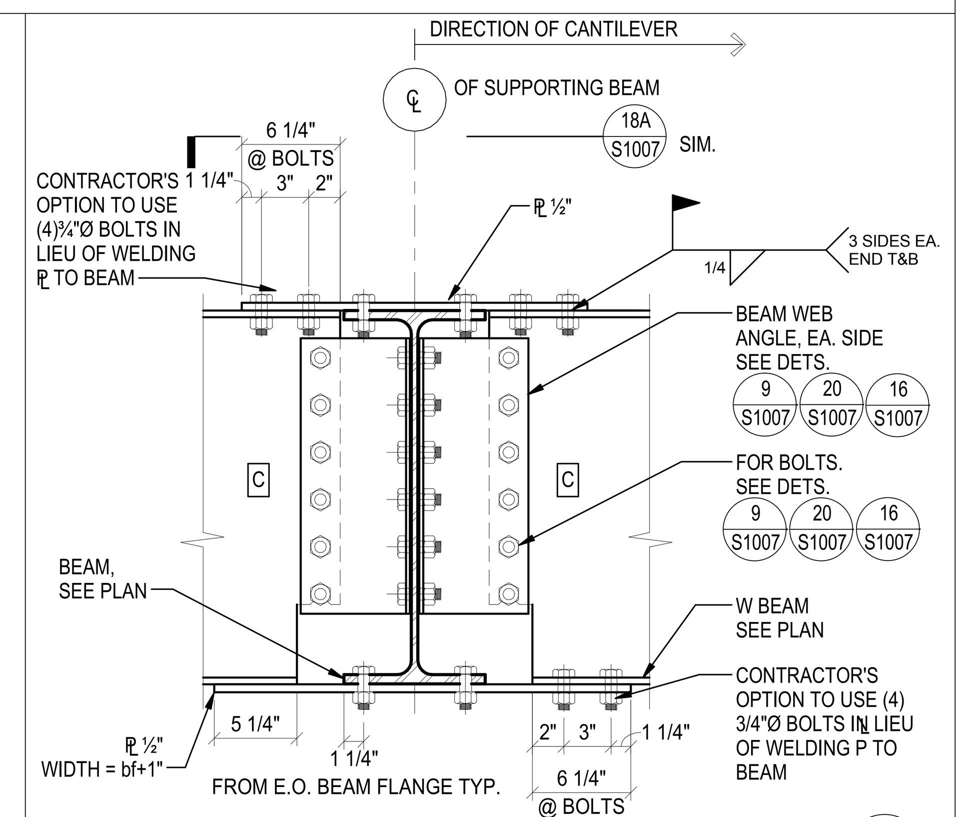

CANTILEVER CONNECTION DETAIL — 8

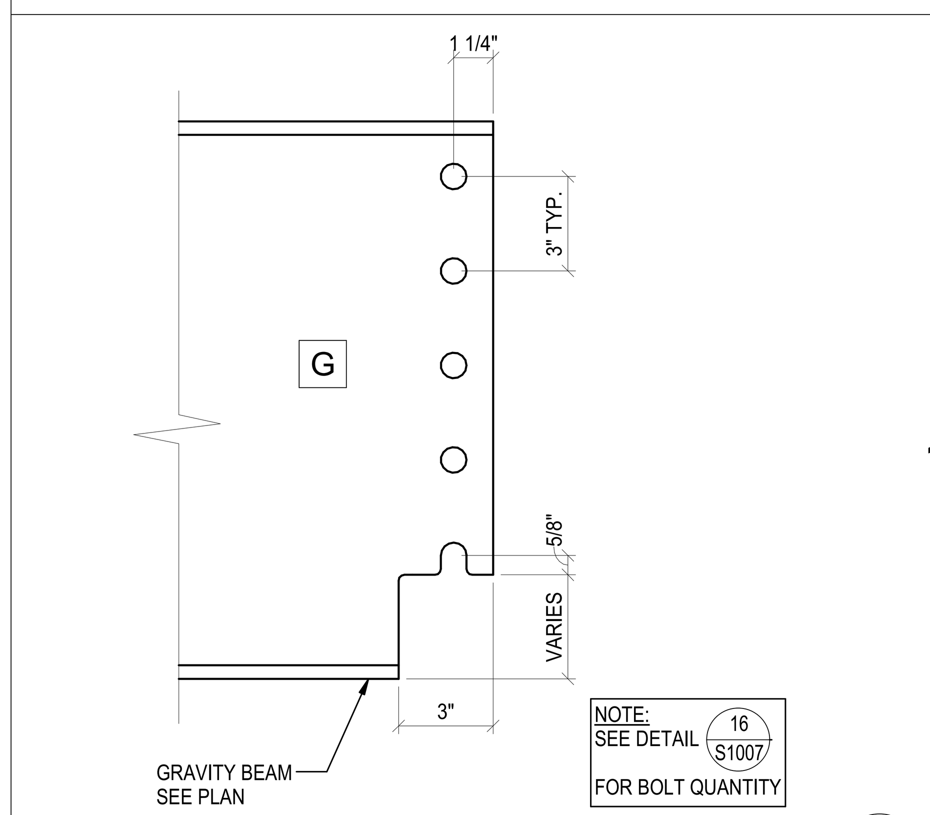

GRAVITY BEAM COPED BOTTOM FLANGE — 15

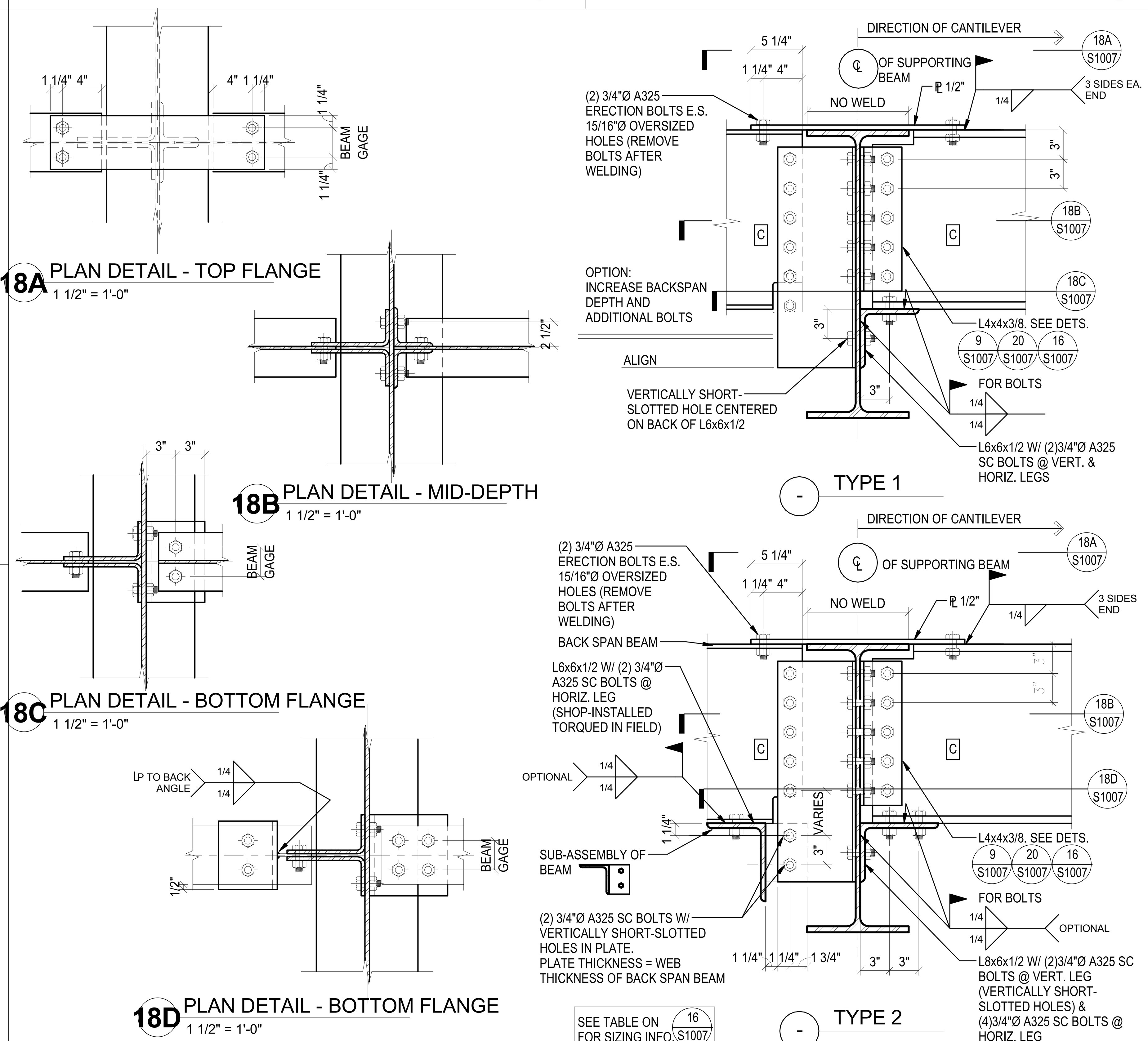

18A PLAN DETAIL - TOP FLANGE
1 1/2" = 1'-0"

18B PLAN DETAIL - MID-DEPTH
1 1/2" = 1'-0"

18C PLAN DETAIL - BOTTOM FLANGE
1 1/2" = 1'-0"

18D PLAN DETAIL - BOTTOM FLANGE
1 1/2" = 1'-0"

CANTILEVER CONNECTION DETAIL — 18

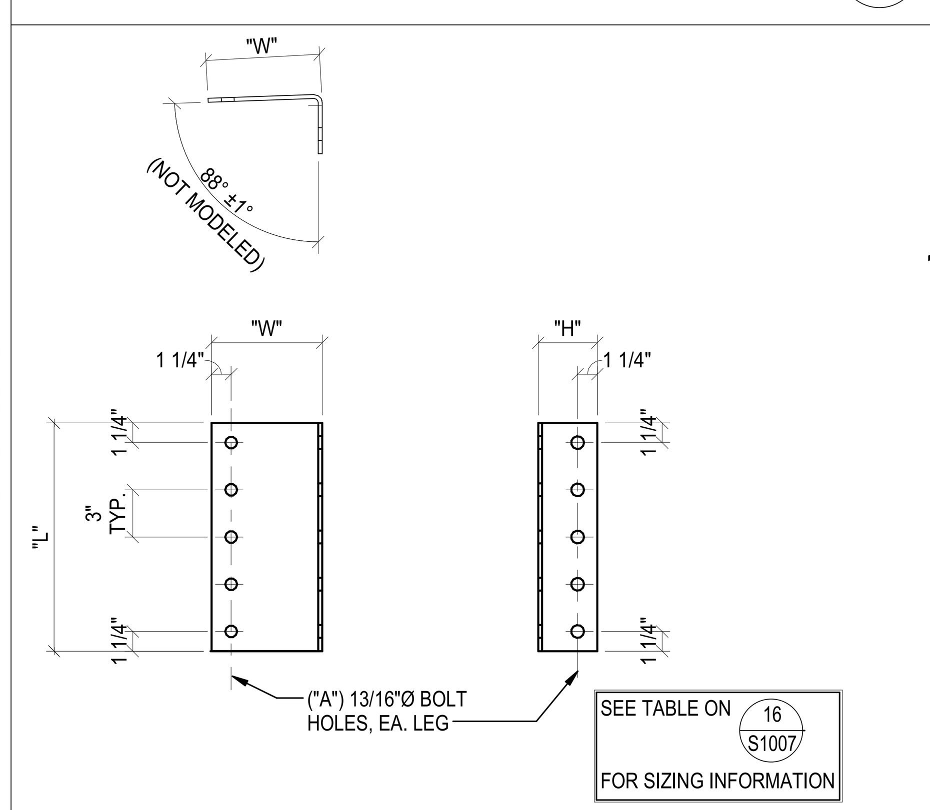

BEAM WEB ANGLE (BWA-) — 20

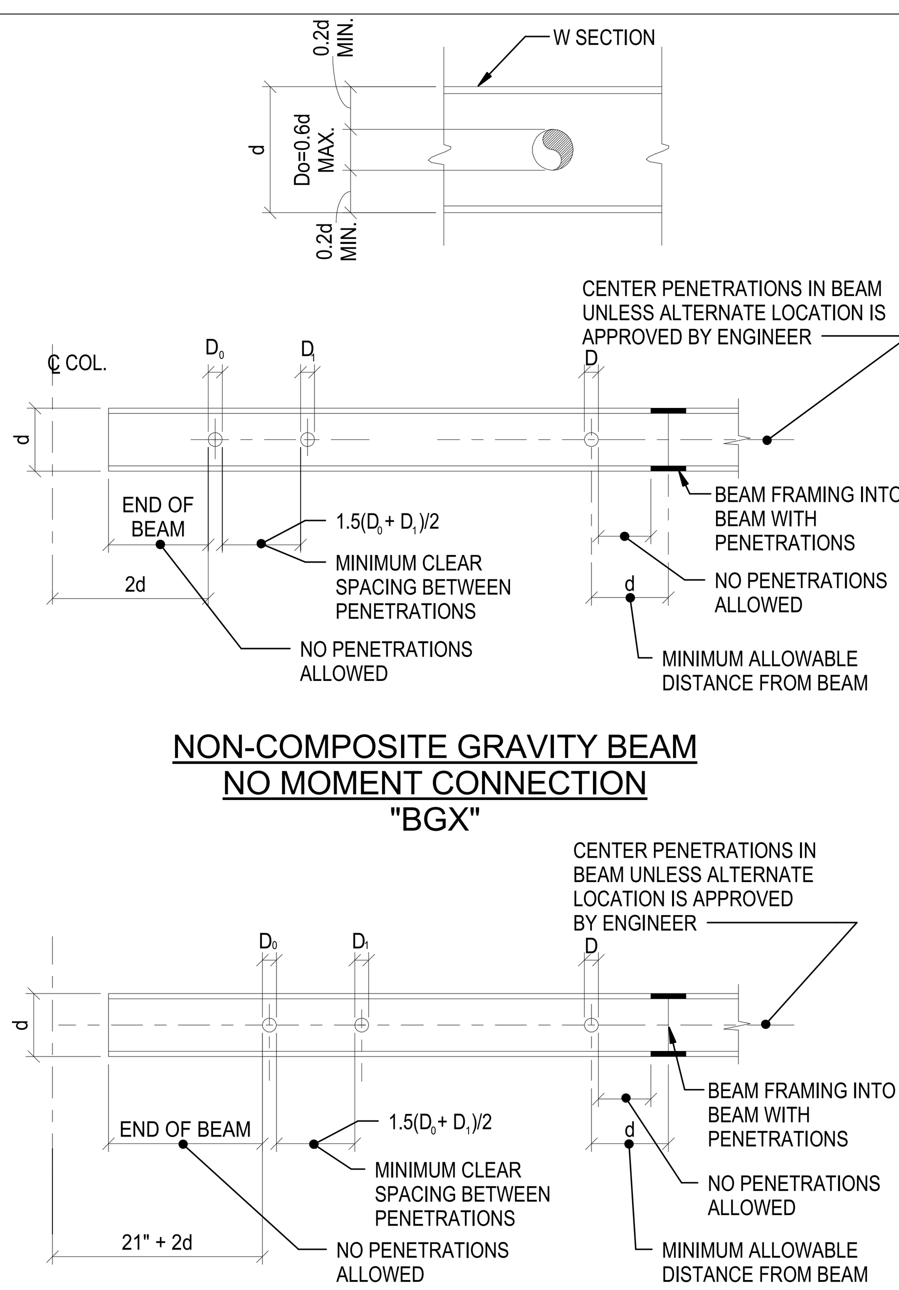

NON-COMPOSITE GRAVITY BEAM
NO MOMENT CONNECTION
"BGX"

MOMENT FRAME BEAM
"BMX"

NOTES:

1. ALL OPENINGS MUST BE APPROVED BY THE ARCHITECT AND ENGINEER.
2. d = BEAM DEPTH
3. WELDED, BOLTED, SCREWED, OR SHOT-IN ATTACHMENTS FOR PERIMETER EDGE ANGLES, EXTERIOR FACADES, PARTITIONS, DUCT WORK, PIPING, OR OTHER CONSTRUCTION SHALL NOT BE PLACED WITHIN 2d FROM THE CENTER OF THE MOMENT COLUMN UNLESS APPROVED BY THE ENGINEER.
4. RECTANGULAR OPENINGS ARE NOT PERMITTED UNLESS APPROVED BY THE ENGINEER.
5. THE SUM OF THE DIAMETERS OF THE WEB PENETRATIONS, GREATER THAN 6", SHALL NOT EXCEED 42" IN ANY 84" SEGMENT OF THE BEAM.

TYPICAL BEAM OR GIRDER - ROUND WEB OPENINGS — 17

BEAM WEB ANGLE DIMENSIONS: W X H INCHES

bf OF SUPPORTING BEAM	EDGE	W	H	THICKNESS
3.94 - 4.06	1.25	4.875	3.75	0.25
5 - 5.53	1.25	5.375	3.75	0.25
5.81 - 6.02	1.25	5.8125	3.75	0.25
6.5 - 7.04	1.25	6.0625	3.75	0.25
7.07 - 7.53	1.25	6.375	3.75	0.25
7.96 - 8.24	1.25	6.875	3.75	0.25
9.00 - 9.07	1.25	7.1875	3.75	0.25
10.00 - 10.5	1.25	7.6875	3.75	0.25

BEAM WEB ANGLE DIMENSIONS: L INCHES

INCOMING BEAM	EDGE	L	*A	D
W8	1.25	8.5	2	1.75
W10	1.25	8.5	2	1.75
W12	1.25	8.5	3	1.75
W14	1.25	8.5	3	1.75
W16	1.25	11.5	4	1.75
W18	1.25	14.5	5	1.75
W21	1.25	14.5	5	1.75
W24	1.25	17.5	6	1.75
W27	1.25	20.5	7	1.75
W30	1.25	23.5	8	1.75

*NUMBER OF BOLTS

NOTES:

1. TABLE AND REFERENCED DETAILS APPLIES TO THE SUPPORTED MEMBER.
2. IN CONDITIONS WHERE k REGION OF GIRDER BEAM IS ENCROACHED BY THE CLIPS, ADJUST "D" VALUE SO CLIPS ARE CLEAR OF THIS REGION.
3. WHERE "A" IS 2, SEE CONNECTION DETAIL 5/-.
4. AT SKEWED BEAMS, USE BENT PLATE WITH THE SAME DIMENSIONS AS THE CORRESPONDING ANGLE EXCEPT FOR "W", WHICH SHOULD BE CALCULATED FROM THE SKEW ANGLE AND THE DIMENSIONS NOTED ON DETAIL 2/-. SEE9/- FOR MORE INFO.
5. IN CASES WHERE THE OTHER END OF A GRAVITY BEAM IS A MOMENT CONNECTION (BMG,BGM,BCM & BMC) ALL BOLTS USED ON THE BEAM WEB ANGLE ON THE GRAVITY END OF THE BEAM SHALL BE DESIGNATED A325SC.

BEAM GRAVITY CONNECTION SCHEDULE — 16

CLIENT
CENTERCAL PROPERTIES, LLC

COPYRIGHT:
Any reproduction or distribution for any purpose other than authorized by IBI Group is forbidden. Written dimensions shall have precedence over scaled dimensions. Contractors shall verify and be responsible for all dimensions and conditions on the job and IBI Group shall be informed of any variations from the dimensions and conditions shown on the drawing. Shop drawings shall be submitted to IBI Group for approval before proceeding with fabrication.
COPYRIGHT © 2016 IBI GROUP

ISSUES

NO.	ISSUANCE	STATUS	DATE
1	STRUCTURAL ADDENDUM 1		05/25/16

SEAL

SUB CONSULTANT
JOHN A. MARTIN & ASSOCIATES
Structural Engineers
950 S. Grand Avenue
Los Angeles, Calif. 90015
Phone (213) 483-6490
Fax (213) 483-3084
J14261

PRIME CONSULTANT
IBI GROUP
18401 Von Karman Avenue, Suite 110
Irvine, CA 92612 United States
tel +1 949 833 5588 ext 146 fax +1 949 833 5511
ibigroup.com

PROJECT
The Village at Totem Lake - Building B
Kirkland, Washington

PROJECT NO:	J14261
DRAWN BY:	Author
CHKD' BY:	Checker
SCALE:	As indicated
DATE:	05/25/16

SHEET TITLE
TYPICAL DETAILS

BLDG: B
SHEET NUMBER: S1007
ISSUE

C:\Users\kenton\Documents\ATW_Totem_Bldg B_S_2016_kenton.rvt
5/25/2016 12:04:10 PM

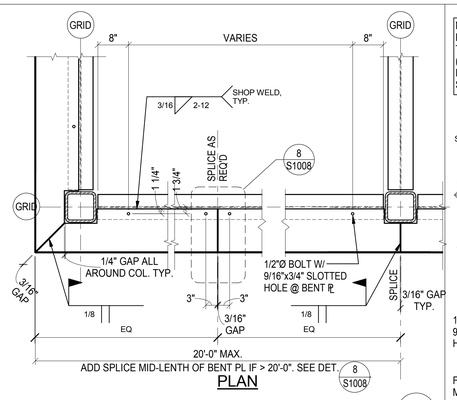

BENT PLATE BETWEEN GRAVITY COLUMNS — 3

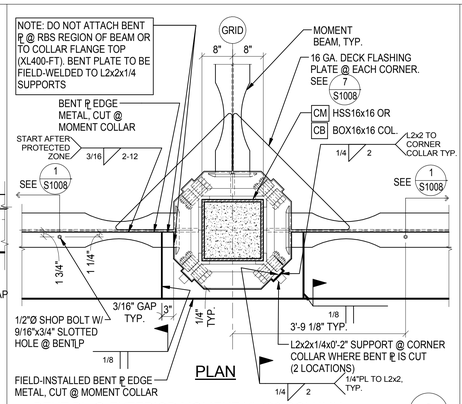

BENT PL @ EXTERIOR MOMENT XL400 COLUMN — 2

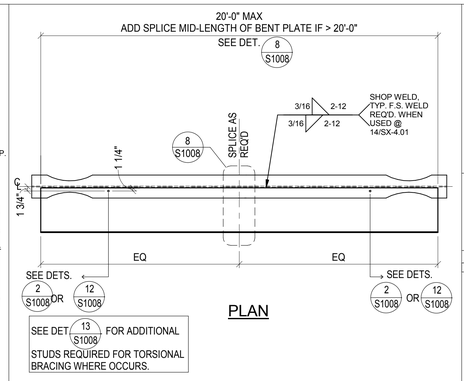

BENT PLATE BETWN MOMENT COLUMNS — 1

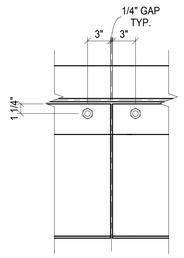

BENT PLATE SPLICE — 8

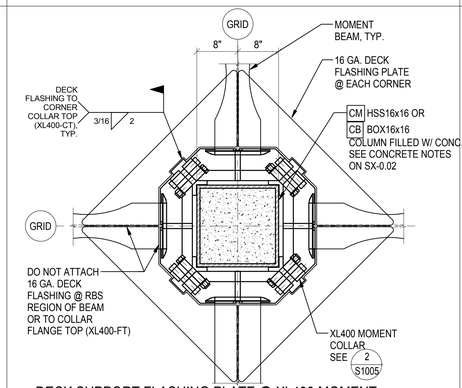

DECK SUPPORT FLASHING PLATE @ XL400 MOMENT COLLAR — 7

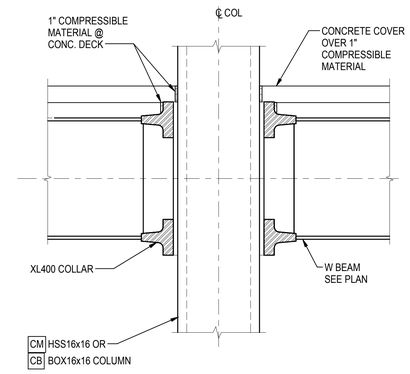

3A SECTION
1" = 1'-0"

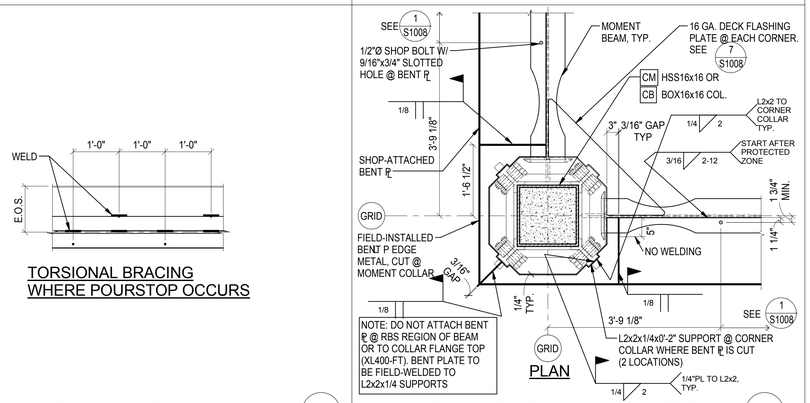

BENT PL @ EXTERIOR CORNER MOMENT XL400 COLUMN — 12

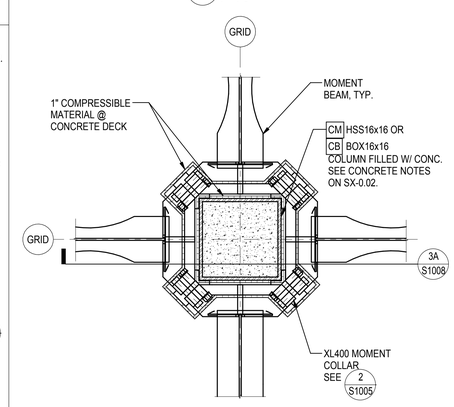

COMPRESSIBLE MATERIAL @ XL400 MOMENT COLLAR — 11

TORSIONAL BRACING WHERE POURSTOP OCCURS

TORSIONAL BRACING DETAIL OPTION 1 — 13

CLIENT

CENTERCAL PROPERTIES, LLC

COPYRIGHT:

Any reproduction or distribution for any purpose other than authorized by IBI Group is forbidden. Written dimensions shall have precedence over scaled dimensions. Contractors shall verify and be responsible for all dimensions and conditions on the job, and report any errors or omissions to the consultant then the dimensions and conditions shown on the drawing. Shop drawings shall be submitted to IBI Group for approval before proceeding with fabrication.

COPYRIGHT © 2016 IBI GROUP

ISSUES

NO.	ISSUANCE	STATUS	DATE

SEAL

EXPIRES

SUB CONSULTANT

MARTIN & associates
JOHN A. MARTIN & ASSOCIATES
Structural Engineers
950 S. Grand Avenue
Los Angeles, Calif. 90015
Phone (213) 483-6490
Fax (213) 483-3084
J14261

PRIME CONSULTANT

IBI
IBI GROUP
18401 Von Karman Avenue, Suite 110
Irvine, CA 92612 United States
tel +1 949 833 5588 ext 146 fax +1 949 833 5511
ibigroup.com

PROJECT

The Village at Totem Lake - Building B
Kirkland, Washington

PROJECT NO:	J14261
DRAWN BY:	Author
CHKD BY:	Checker
SCALE:	As indicated
DATE:	05/25/16

SHEET TITLE

TYPICAL DETAILS

BLDG	SHEET NUMBER	ISSUE
B	S1008	

5/26/2016 12:24:11 PM C:\Users\barker\Documents\ATV_Totem_Bldg\B_S_2016_barker.rvt

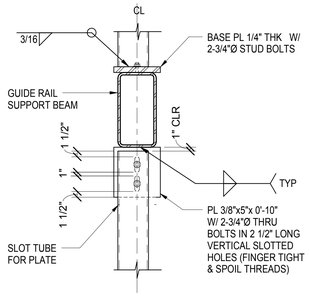

ELEVATOR SEPARATOR BEAM (3)
3/4" = 1'-0"

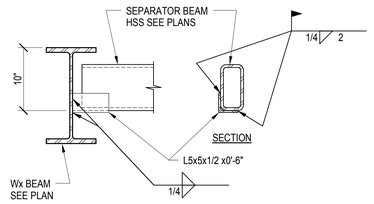

ELEVATOR SEPARATOR BEAM (2)
3/4" = 1'-0"

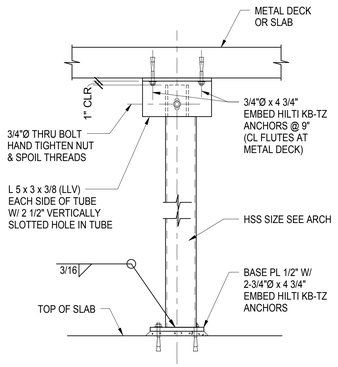

ELEVATOR GUIDE RAIL SUPPORT DETAIL (1)
3/4" = 1'-0"

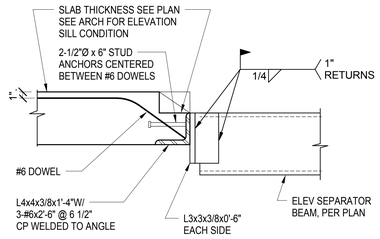

SEPARATOR BEAM TO CONCRETE SLAB

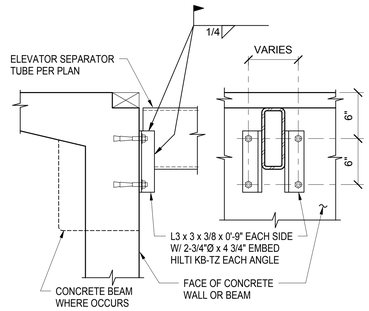

SEPARATOR BEAM TO CONCRETE WALL OR BEAM

ELEVATOR SEPARATOR BEAM (12)
3/4" = 1'-0"

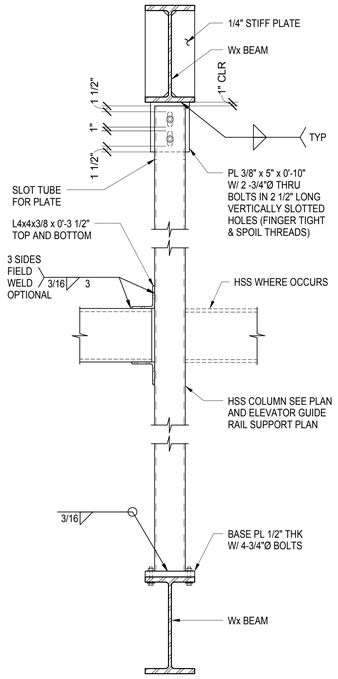

GUIDE RAIL SUPPORT DETAIL (11)
3/4" = 1'-0"

CLIENT

CENTERCAL PROPERTIES, LLC

COPYRIGHT:

Any reproduction or distribution for any purpose other than authorized by IBI Group is forbidden. Written dimensions shall have precedence over scaled dimensions. Contractors shall verify and be responsible for all dimensions and conditions on site. Any errors, omissions or conflicts must be reported to IBI Group before the dimensions and conditions shown on the drawing. Shop drawings shall be submitted to IBI Group for approval before proceeding with fabrication.

COPYRIGHT © 2016 IBI GROUP

ISSUES

NO.	ISSUANCE	STATUS	DATE

SEAL

EXPIRES

SUB CONSULTANT

MARTIN & associates

JOHN A. MARTIN & ASSOCIATES
Structural Engineers
950 S. Grand Avenue
Los Angeles, Calif. 90015
Phone (213) 483-6490
Fax (213) 483-3084
J14261

PRIME CONSULTANT

IBI

IBI GROUP
18401 Von Karman Avenue, Suite 110
Irvine, CA 92612 United States
tel +1 949 833 5588 ext 146 fax +1 949 833 5511
ibigroup.com

PROJECT

The Village at Totem Lake - Building B
Kirkland, Washington

PROJECT NO:	J14261
DRAWN BY:	Author
CHKD BY:	Checker
SCALE:	3/4" = 1'-0"
DATE:	05/25/16

SHEET TITLE

TYPICAL DETAILS

BLDG	SHEET NUMBER	ISSUE
B	S1009	

5/26/2016 12:54:12 PM C:\Users\bkirton\Documents\ATW_Totem_Bldg B_S_2016_bkirton.rvt

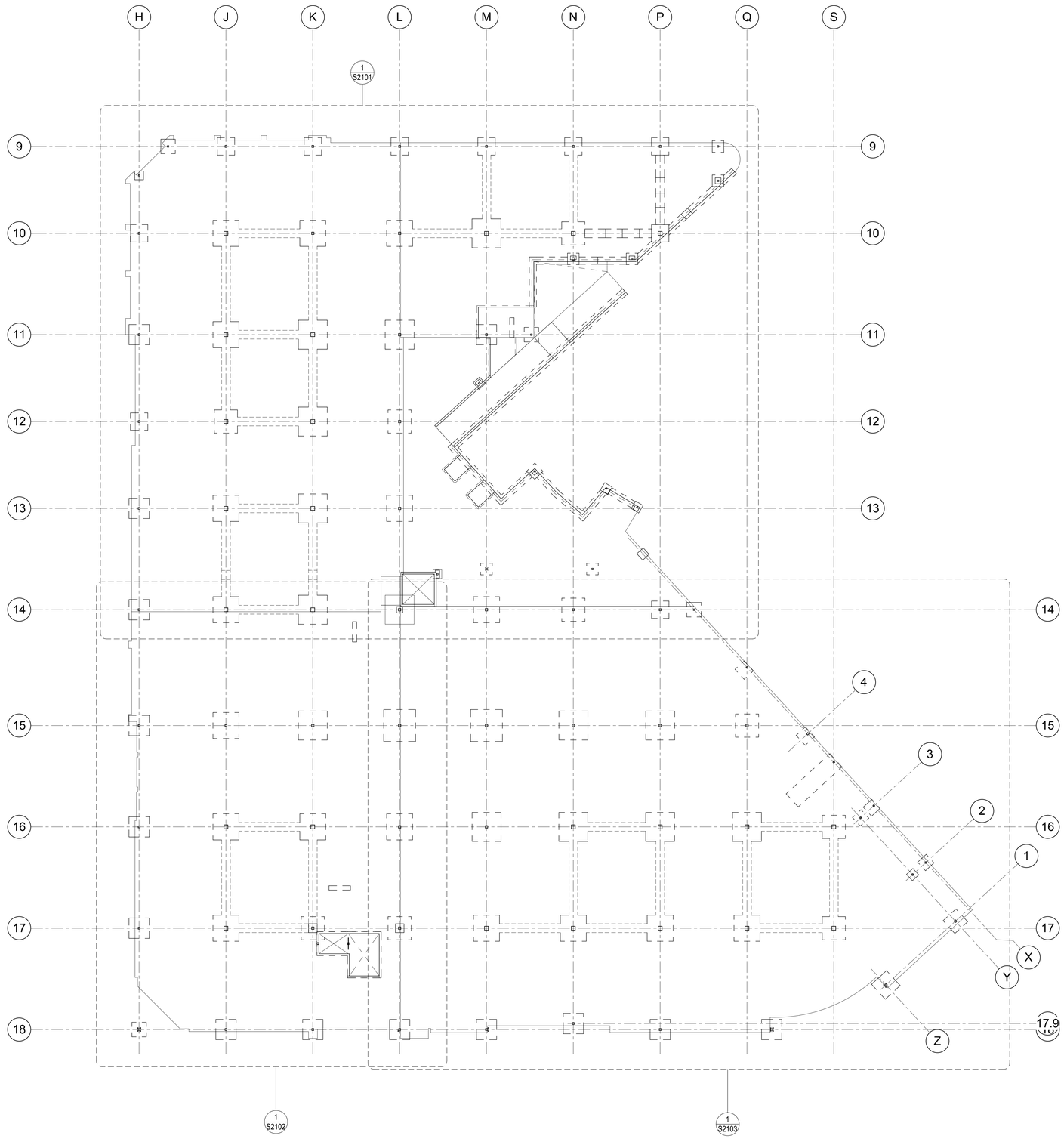

PROJECT TRUE

BLDG B - LEVEL 1 OVERALL
1/16" = 1'-0"

1

CLIENT

CENTERCAL PROPERTIES, LLC

COPYRIGHT:

Any reproduction or distribution for any purpose other than authorized by IBI Group is forbidden. Written dimensions shall have precedence over scaled dimensions. Contractors shall verify and be responsible for all dimensions and conditions on the job, and report any errors or omissions to the Consultant then the dimensions and conditions shown on the drawing. Shop drawings shall be submitted to IBI Group for approval before proceeding with fabrication.

COPYRIGHT © 2016 IBI GROUP

ISSUES

NO.	ISSUANCE	STATUS	DATE

SEAL

EXPIRES

SUB CONSULTANT

MARTIN & associates
JOHN A. MARTIN & ASSOCIATES
Structural Engineers
950 S. Grand Avenue
Los Angeles, Calif. 90015
Phone (213) 483-6490
Fax (213) 483-3084
J14261

PRIME CONSULTANT

IBI
IBI GROUP
18401 Von Karman Avenue, Suite 110
Irvine, CA 92612 United States
tel +1 949 833 5588 ext 146 fax +1 949 833 5511
ibigroup.com

PROJECT

The Village at Totem Lake - Building B
Kirkland, Washington

PROJECT NO:	J14261
DRAWN BY:	Author
CHKD BY:	Checker
SCALE:	1/16" = 1'-0"
DATE:	05/25/16

SHEET TITLE

OVERALL FOUNDATION PLAN

BLDG	SHEET NUMBER	ISSUE
B	S2001	

5/26/2016 12:54:13 PM C:\Users\tkinton\Documents\ATW_Totem_B\bldgB_S_2016_tkinton.rvt

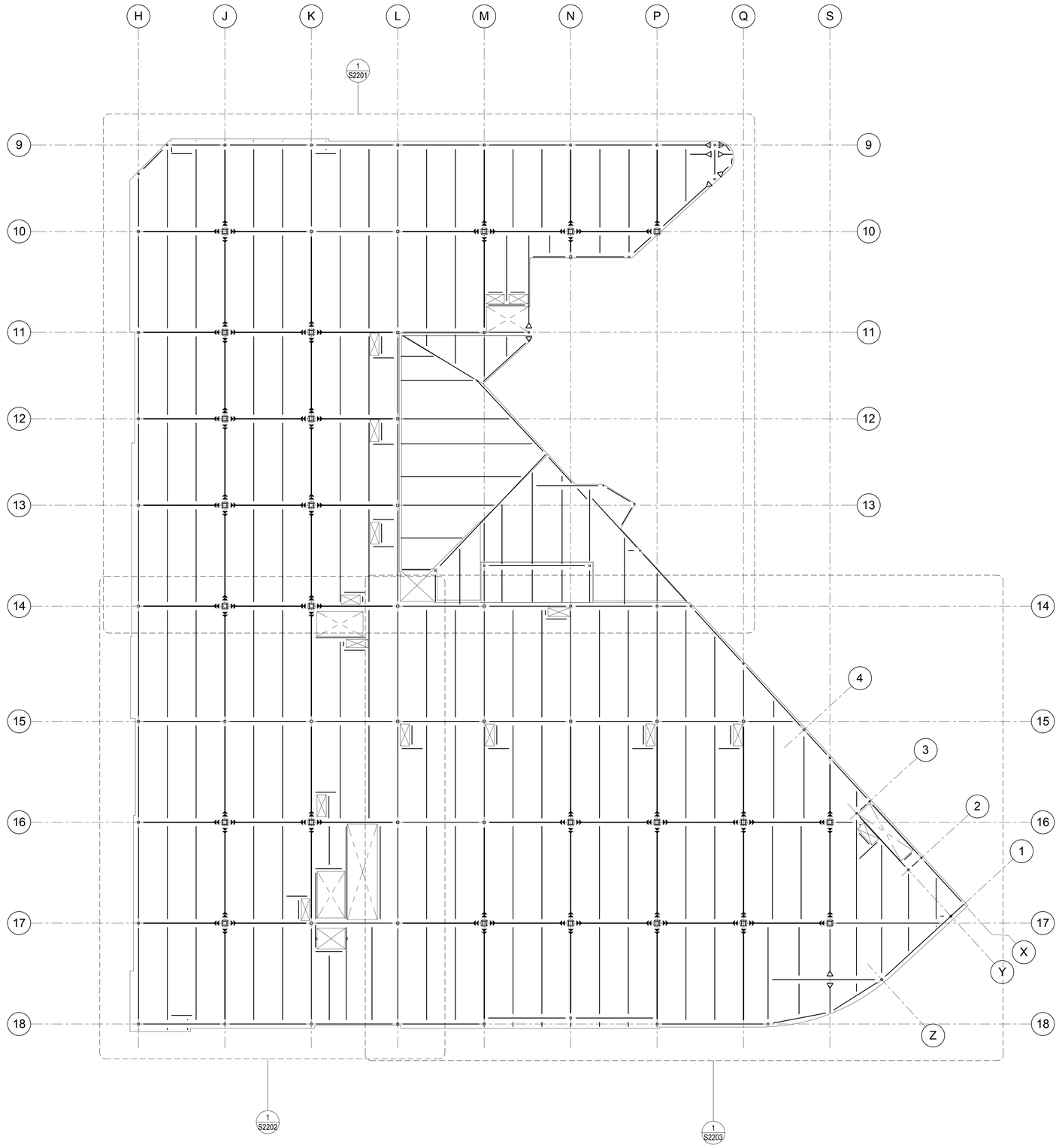

PROJECT TRUE

BLDG B - LEVEL 2 OVERALL

1/16" = 1'-0"

1

5/26/2016 12:54:14 PM C:\Users\bkirton\Documents\ATV_Totem_Bldg B_S_2016_bkirton.rvt

CLIENT

CENTERCAL PROPERTIES, LLC

COPYRIGHT:

Any reproduction or distribution for any purpose other than authorized by IBI Group is forbidden. Written dimensions shall have precedence over scaled dimensions. Contractors shall verify and be responsible for all dimensions and conditions on the job, and report any errors, omissions or conflicts in the dimensions and conditions shown on the drawing. Shop drawings shall be submitted to IBI Group for approval before proceeding with fabrication.

COPYRIGHT © 2016 IBI GROUP

ISSUES

NO.	ISSUANCE	STATUS	DATE

SEAL

EXPIRES

SUB CONSULTANT

MARTIN & associates

JOHN A. MARTIN & ASSOCIATES
Structural Engineers
950 S. Grand Avenue
Los Angeles, Calif. 90015
Phone (213) 483-6490
Fax (213) 483-3084
J14261

PRIME CONSULTANT

IBI

IBI GROUP
18401 Von Karman Avenue, Suite 110
Irvine, CA 92612 United States
tel +1 949 833 5588 ext 146 fax +1 949 833 5511
ibigroup.com

PROJECT

The Village at Totem Lake - Building B

Kirkland, Washington

PROJECT NO:	J14261
DRAWN BY:	Author
CHKD BY:	Checker
SCALE:	1/16" = 1'-0"
DATE:	05/25/16

SHEET TITLE

OVERALL SECOND FLOOR FRAMING PLAN

BLDG	SHEET NUMBER	ISSUE
B	S2002	

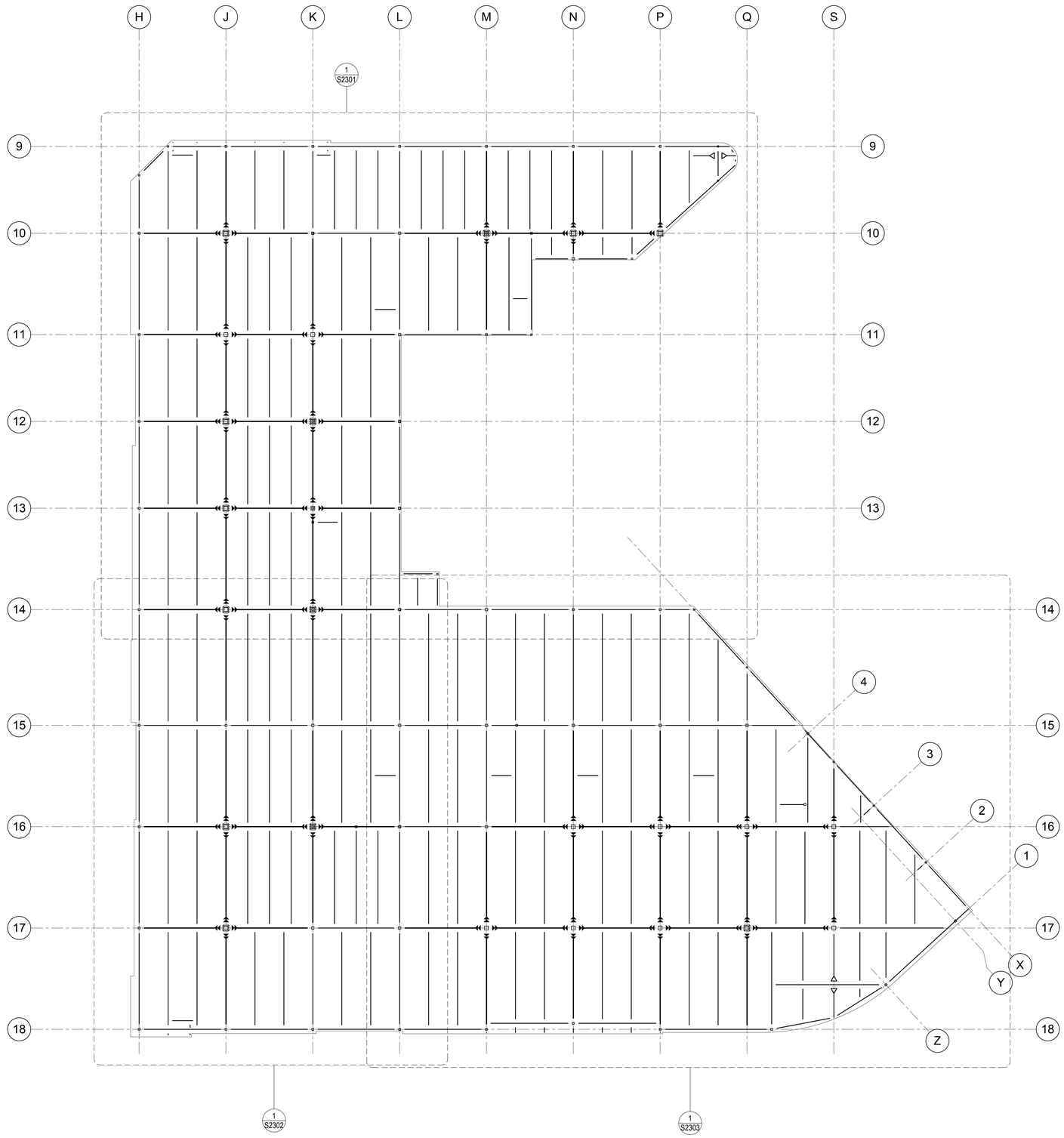

PROJECT TRUE

BLDG B - ROOF OVERALL
1/16" = 1'-0"

1

5/26/2016 12:54:15 PM C:\Users\bkirton\Documents\ATV_Totem_Bldg B_S_2016_bkirton.rvt

CLIENT

CENTERCAL PROPERTIES, LLC

COPYRIGHT:

Any reproduction or distribution for any purpose other than authorized by IBI Group is forbidden. Written dimensions shall have precedence over scaled dimensions. Contractors shall verify and be responsible for all dimensions and conditions on the job, and IBI Group must be informed of any variation from the dimensions and conditions shown on the drawing. Shop drawings shall be submitted to IBI Group for approval before proceeding with fabrication.

COPYRIGHT © 2016 IBI GROUP

ISSUES

NO.	ISSUANCE	STATUS	DATE

SEAL

BARRY SCHNEIDER
STATE OF WASHINGTON
21669
PROFESSIONAL ENGINEER

EXPIRES

SUB CONSULTANT

MARTIN & associates
JOHN A. MARTIN & ASSOCIATES
Structural Engineers
950 S. Grand Avenue
Los Angeles, Calif. 90015
Phone (213) 483-6490
Fax (213) 483-3084
J14261

PRIME CONSULTANT

IBI
IBI GROUP
18401 Von Karman Avenue, Suite 110
Irvine, CA 92612 United States
tel +1 949 833 5588 ext 146 fax +1 949 833 5511
ibigroup.com

PROJECT

The Village at Totem Lake - Building B
Kirkland, Washington

PROJECT NO:	J14261
DRAWN BY:	Author
CHKD BY:	Checker
SCALE:	1/16" = 1'-0"
DATE:	05/25/16

SHEET TITLE

OVERALL ROOF FRAMING PLAN

BLDG	SHEET NUMBER	ISSUE
B	S2003	

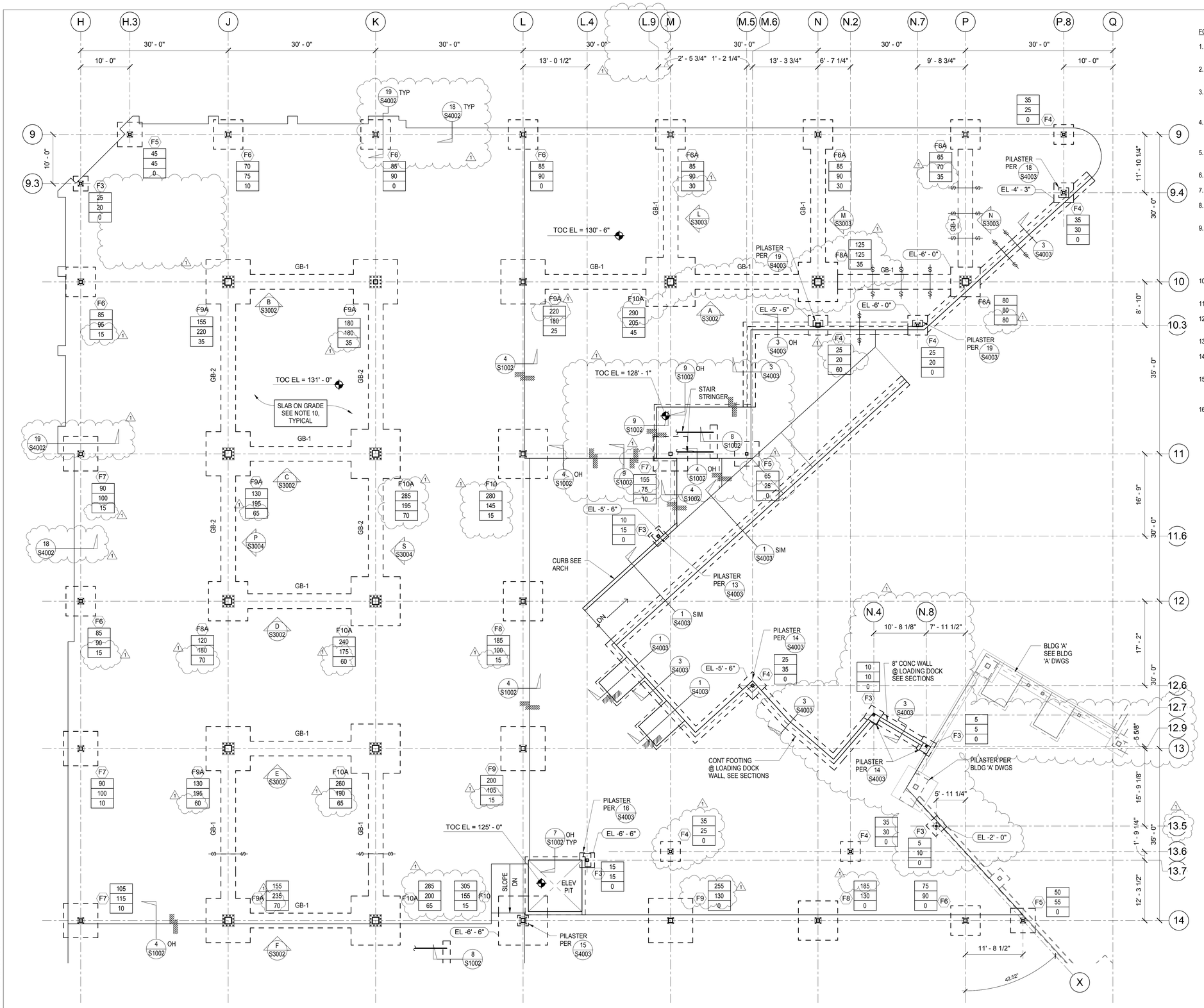

FOUNDATION NOTES:

1. FOR GENERAL NOTES, SEE S0001 THRU S0004 AND FOR TYPICAL DETAILS, SEE S1001 THRU S1009.
2. VERIFY ALL DIMENSIONS WITH ARCHITECTURAL DRAWINGS INCLUDING DIMENSIONS NOT SHOWN.
3. EL = 0'-0" — INDICATES TOP OF CONCRETE SLAB ON GRADE ELEVATION, SEE ARCHITECTURAL DRAWINGS FOR EXACT ELEVATION/DATUM.
4. TOP OF FOOTING OR GRADE/TIE BEAM ELEVATION SHALL BE 1'-6" BELOW LOWEST ADJACENT TOP OF CONCRETE SLAB OR FINISHED GRADE, UNLESS NOTED OTHERWISE THUS (-X'-XX")
5. TOP OF PILASTER ELEVATION SHALL BE 1'-6" BELOW LOWEST ADJACENT TOP OF CONCRETE OR FINISHED GRADE.
6. FOR NON-FRAME COLUMN SCHEDULE SEE SHEET S3001.
7. FOR MOMENT FRAME ELEVATIONS SEE SHEETS S3002-S3005.
8. GB-1 INDICATES GRADE BEAM, SEE 1/S4002 AND 6/S4002 FOR REINFORCING.
9. INDICATES GEOPIER: XX — DL (WORKING); XX — LL & SNOW (WORKING); X — EQ (ULTIMATE) WHERE OCCURS ALL LOADS ARE KIPS
10. 5" SLAB ON GRADE WITH #4@18" EACH WAY OVER 6" CRUSHED GRAVEL BASE OVER 15 MIL VAPOR BARRIER OVER COMPACTED SUBGRADE, BY TENANT.
11. (F3) INDICATES SPREAD FOOTING MARK, SEE FOOTING SCHEDULE ON S4001.
12. INDICATES SLAB DEPRESSION (COORDINATE WITH ARCHITECTURAL DRAWINGS), SEE 3/S1002.
13. REFER TO ARCHITECURAL DRAWINGS FOR EXTENT OF SLAB EDGE.
14. ALL CONCRETE FOUNDATIONS SHALL BE NORMAL WEIGHT CONCRETE WITH F'c = 4000 PSI
15. INDICATES STEPPED FOOTING/GRADE BEAM SEE 18/S1001 FOR WALL FOOTING STEP SEE 16/S4002 FOR GRADE BEAM STEP
16. FOUNDATIONS SHALL BE PLACED ON REMEDIATED SOILS PER GEOR (GEOPIERS).

PROJECT TRUE

BLDG B - LEVEL 1 - EAST & LOADING DOCK
1/8" = 1'-0"

1

CLIENT
CENTERCAL PROPERTIES, LLC

COPYRIGHT:
Any reproduction or distribution for any purpose other than authorized by IBI Group is forbidden. Written dimensions shall have precedence over scaled dimensions. Contractors shall verify and be responsible for all dimensions and conditions on the job, and report any errors or omissions to the architect then the dimensions and conditions shown on the drawing. Shop drawings shall be submitted to IBI Group for approval before proceeding with fabrication.
COPYRIGHT © 2016 IBI GROUP

ISSUES

NO.	ISSUANCE	STATUS	DATE
1	STRUCTURAL ADDENDUM 1		05/25/16

SEAL
MARK SCHNEIDER — STATE OF WASHINGTON — 21669 — REGISTERED PROFESSIONAL ENGINEER
EXPIRES

SUB CONSULTANT
MARTIN & associates
JOHN A. MARTIN & ASSOCIATES
Structural Engineers
950 S. Grand Avenue
Los Angeles, Calif. 90015
Phone (213) 483-6490
Fax (213) 483-3084
J14261

PRIME CONSULTANT
IBI GROUP
18401 Von Karman Avenue, Suite 110
Irvine, CA 92612 United States
tel +1 949 833 5588 ext 146 fax +1 949 833 5511
ibigroup.com

PROJECT
The Village at Totem Lake - Building B
Kirkland, Washington

PROJECT NO:	J14261
DRAWN BY:	Author
CHKD BY:	Checker
SCALE:	As indicated
DATE:	05/25/16

SHEET TITLE
FOUNDATION PLAN - EAST & LOADING DOCK

BLDG	SHEET NUMBER	ISSUE
B	S2101	

5/26/2016 12:54:18 PM C:\Users\bkinzer\Documents\ATW_Totem_Bldg B_S_2016_bkinzer.rvt

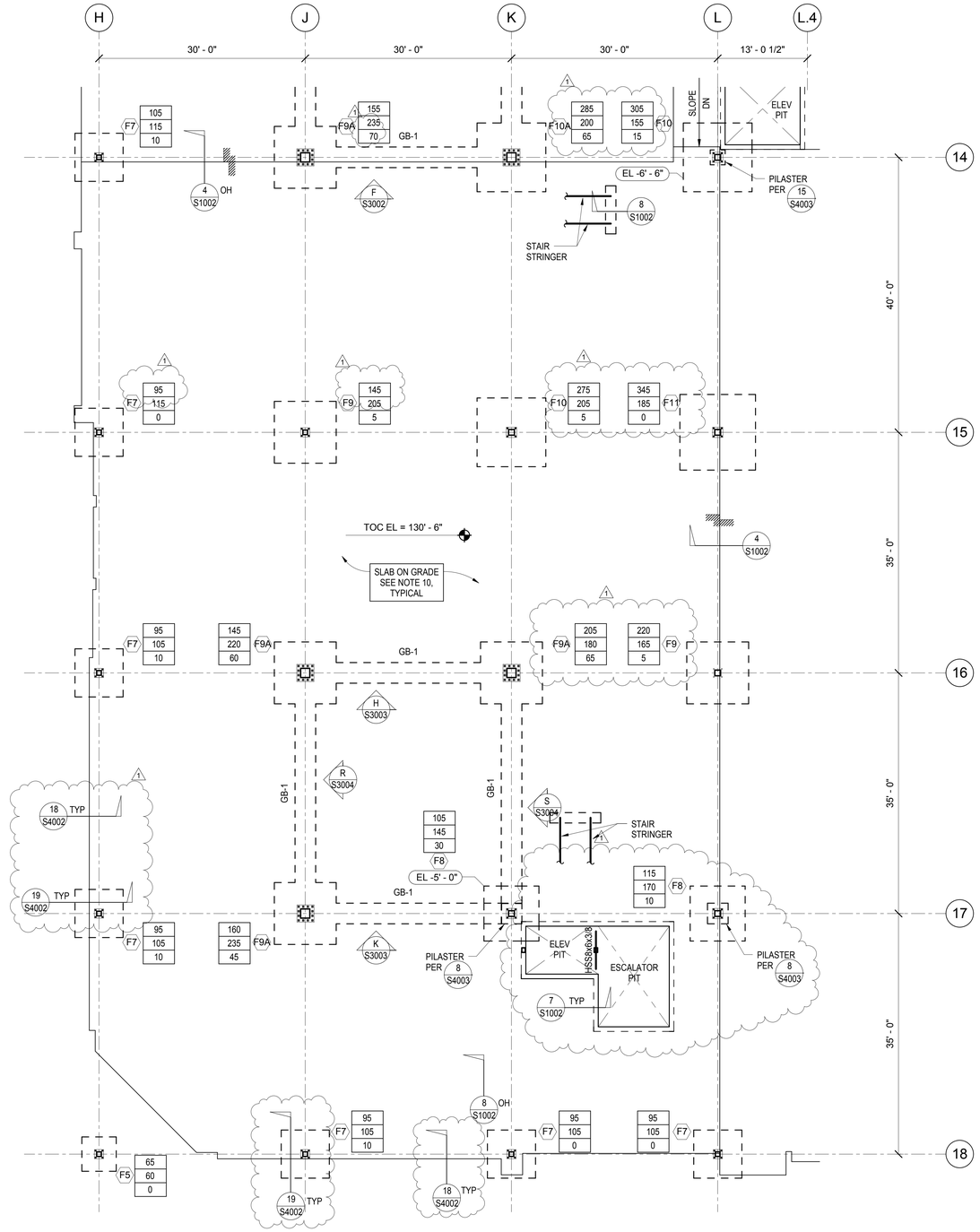

NOTE:
SEE S2101 FOR NOTES.

PROJECT TRUE

BLDG B - LEVEL 1 - NORTHWEST
1/8" = 1'-0"

1

CLIENT

CENTERCAL PROPERTIES, LLC

COPYRIGHT:

Any reproduction or distribution for any purpose other than authorized by IBI Group is forbidden. Written dimensions shall have precedence over scaled dimensions. Contractors shall verify and be responsible for all dimensions and conditions on site. IBI Group shall be notified of any variations from the dimensions and conditions shown on the drawing. Shop drawings shall be submitted to IBI Group for approval before proceeding with fabrication.

COPYRIGHT © 2016 IBI GROUP

ISSUES

NO.	ISSUANCE	STATUS	DATE
1	STRUCTURAL ADDENDUM 1		05/25/16

SEAL

BARRY SCHNEIDER
STATE OF WASHINGTON
21669
REGISTERED PROFESSIONAL ENGINEER

EXPIRES

SUB CONSULTANT

MARTIN & associates
JOHN A. MARTIN & ASSOCIATES
Structural Engineers
950 S. Grand Avenue
Los Angeles, Calif. 90015
Phone (213) 483-6490
Fax (213) 483-3084
J14261

PRIME CONSULTANT

IBI
IBI GROUP
18401 Von Karman Avenue, Suite 110
Irvine, CA 92612 United States
tel +1 949 833 5588 ext 146 fax +1 949 833 5511
ibigroup.com

PROJECT

The Village at Totem Lake - Building B
Kirkland, Washington

PROJECT NO:	J14261
DRAWN BY:	Author
CHKD BY:	Checker
SCALE:	As indicated
DATE:	05/25/16

SHEET TITLE

FOUNDATION PLAN - NORTHWEST

BLDG	SHEET NUMBER	ISSUE
B	S2102	

5/26/2016 12:54:18 PM C:\Users\kbolton\Documents\ATW_Totem_Bldg(B_S_2016_B)kbrlan.rvt

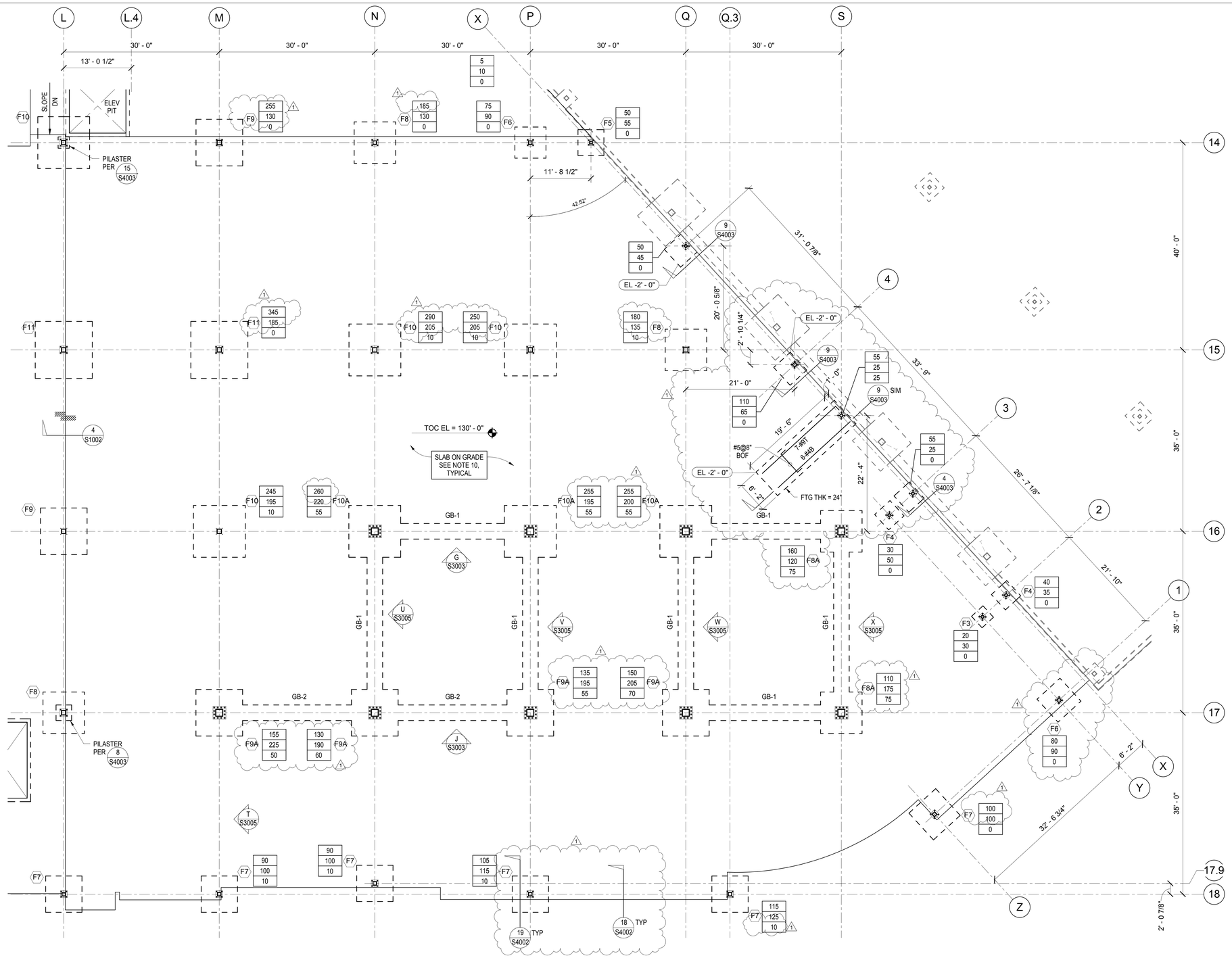

NOTE:
SEE S2101 FOR NOTES.

PROJECT TRUE

BLDG B - LEVEL 1 - SOUTHWEST
1/8" = 1'-0"

1

CLIENT

CENTERCAL PROPERTIES, LLC

COPYRIGHT:

Any reproduction or distribution for any purpose other than authorized by IBI Group is forbidden. Written dimensions shall have precedence over scaled dimensions. Contractors shall verify and be responsible for all dimensions and conditions on site. Any errors or omissions shall be reported to IBI Group then the dimensions and conditions shown on the drawing. Shop drawings shall be submitted to IBI Group for approval before proceeding with fabrication.

COPYRIGHT © 2016 IBI GROUP

ISSUES

NO.	ISSUANCE	STATUS	DATE
1	STRUCTURAL ADDENDUM 1		05/25/16

SEAL

JOHN A. MARTIN & ASSOCIATES STRUCTURAL ENGINEERS 21669 REGISTERED PROFESSIONAL ENGINEER

EXPIRES

SUB CONSULTANT

JOHN A. MARTIN & ASSOCIATES
Structural Engineers
950 S. Grand Avenue
Los Angeles, Calif. 90015
Phone (213) 483-6490
Fax (213) 483-3084
J14261

PRIME CONSULTANT

IBI GROUP
18401 Von Karman Avenue, Suite 110
Irvine, CA 92612 United States
tel +1 949 833 5588 ext 146 fax +1 949 833 5511
ibigroup.com

PROJECT

The Village at Totem Lake - Building B
Kirkland, Washington

PROJECT NO:	J14261
DRAWN BY:	Author
CHKD BY:	Checker
SCALE:	As indicated
DATE:	05/25/16

SHEET TITLE

FOUNDATION PLAN - SOUTHWEST

BLDG	SHEET NUMBER	ISSUE
B	S2103	

5/26/2016 12:24:19 PM C:\Users\bkeser\Documents\ATV_Totem_Bldg B_S_2016_bkeser.rvt

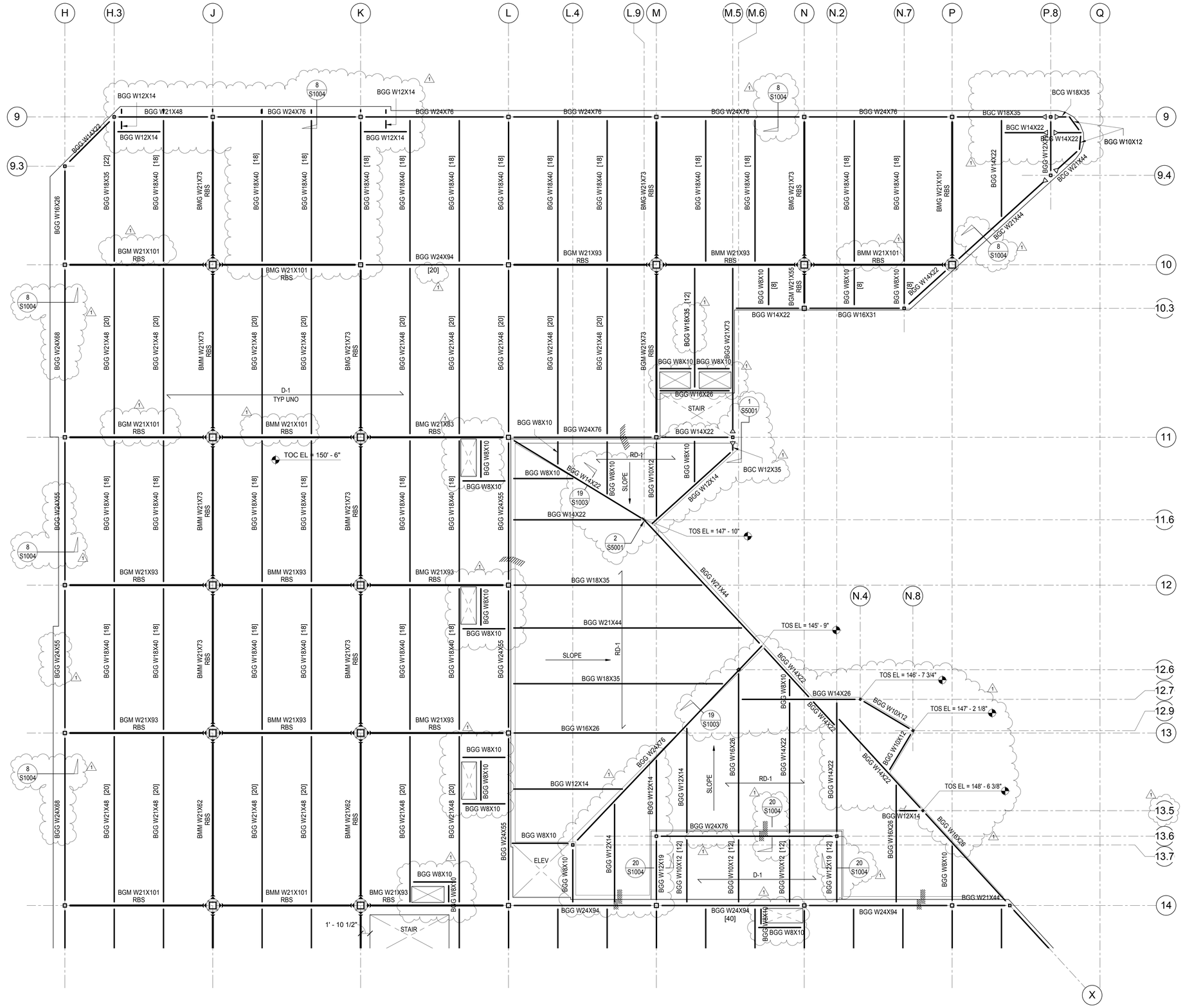

STEEL FLOOR FRAMING NOTES AND LEGEND

1. SEE ARCHITECTURAL DRAWINGS FOR DIMENSIONS NOT INDICATED. REFER TO AND CHECK WITH MECHANICAL ACCORDINGLY.
2. FOR GENERAL NOTES SEE SHEETS S0001 THRU S0004, FOR TYPICAL DETAILS, SEE SHEETS S1001 THRU S1009.
3. INDICATES BEAM WITH CONXL SEISMIC MOMENT CONNECTION.
4. INDICATES NON-FRAME MOMENT CONNECTION.
5. FOR ELEVATOR GUIDERAIL SUPPORT DETAILS SEE SHEET 1009.
6. INDICATES CHANGE IN SLAB ELEVATION.
7. <X> INDICATES UPWARD CAMBER IN BEAM. (INCHES)
8. [X] INDICATES NUMBER OF SHEAR STUDS ON COMPOSITE BEAM, SEE 1/S1003 AND 12/S1006 AT RBS BEAMS.
9. [X-X-X] INDICATES NUMBER OF SHEAR STUDS ON COMPOSITE GIRDER, SEE 1/S1003 AND 12/S1006 AT RBS BEAMS.
10. (SLRS) INDICATES SEISMIC LOAD RESISTING SYSTEM MEMBER. ALL RBS MEMBERS ARE (SLRS).

STEEL FLOOR DECK TYPES:

D-1 — INDICATES W2 FORMLOK 18 GA GALVANIZED METAL DECK WITH 2 1/2" NORMAL WEIGHT CONCRETE FILL (4 1/2" TOTAL THICKNESS) OVER TOP FLUTES WITH #3 @ 16" EACH WAY (1" CLEAR FROM TOP OF SLAB). 11'-0" MAX CLEAR SPAN UNSHORED (2 SPANS MIN.)

SIDELAP CONNECTION: BUTTON PUNCH @24"

ATTACHMENTS TO SUPPORTS: PROVIDE (4)HILTI X-HSN 24 POWDER-DRIVEN FASTENERS (ICC ESR 3592) PER SHEET PER SUPPORT. PROVIDE POWDER-DRIVEN FASTENERS @ 6" AT MARGINS AND BEAMS PARALLEL TO DECKING.

NOTE: SHEAR STUDS PER DETAIL 1/S1003 CAN BE CONSIDERED A SUBSTITUTE FOR ABOVE ATTACHMENTS WHERE OCCURS.

PROJECT TRUE

BLDG B - LEVEL 2 - EAST & LOADING DOCK
1/8" = 1'-0"

1

CLIENT

CENTERCAL PROPERTIES, LLC

COPYRIGHT:

Any reproduction or distribution for any purpose other than authorized by IBI Group is forbidden. Written dimensions shall have precedence over scaled dimensions. Contractors shall verify and be responsible for all dimensions and conditions on the job, and IBI Group must be informed of any variations from the dimensions and conditions shown on the drawing. Shop drawings shall be submitted to IBI Group for approval before proceeding with fabrication.

COPYRIGHT © 2016 IBI GROUP

ISSUES

NO.	ISSUANCE	STATUS	DATE
1	STRUCTURAL ADDENDUM 1		05/25/16

SEAL

BARRY SCHLATER STATE OF WASHINGTON 21669 REGISTERED PROFESSIONAL ENGINEER

EXPIRES

SUB CONSULTANT

MARTIN & associates
JOHN A. MARTIN & ASSOCIATES
Structural Engineers
950 S. Grand Avenue
Los Angeles, Calif. 90015
Phone (213) 483-6490
Fax (213) 483-3084
J14261

PRIME CONSULTANT

IBI
IBI GROUP
18401 Von Karman Avenue, Suite 110
Irvine, CA 92612 United States
tel +1 949 833 5588 ext 146 fax +1 949 833 5511
ibigroup.com

PROJECT

The Village at Totem Lake - Building B
Kirkland, Washington

PROJECT NO:	J14261
DRAWN BY:	Author
CHKD BY:	Checker
SCALE:	1/8" = 1'-0"
DATE:	05/25/16

SHEET TITLE

SECOND FLOOR FRAMING PLAN - EAST & LOADING DOCK CANOPY

BLDG	SHEET NUMBER	ISSUE
B	S2201	

5/26/2016 12:54:20 PM C:\Users\jskelton\Documents\ATW_Totem_Bldg B_S_2016_jskelton.rvt

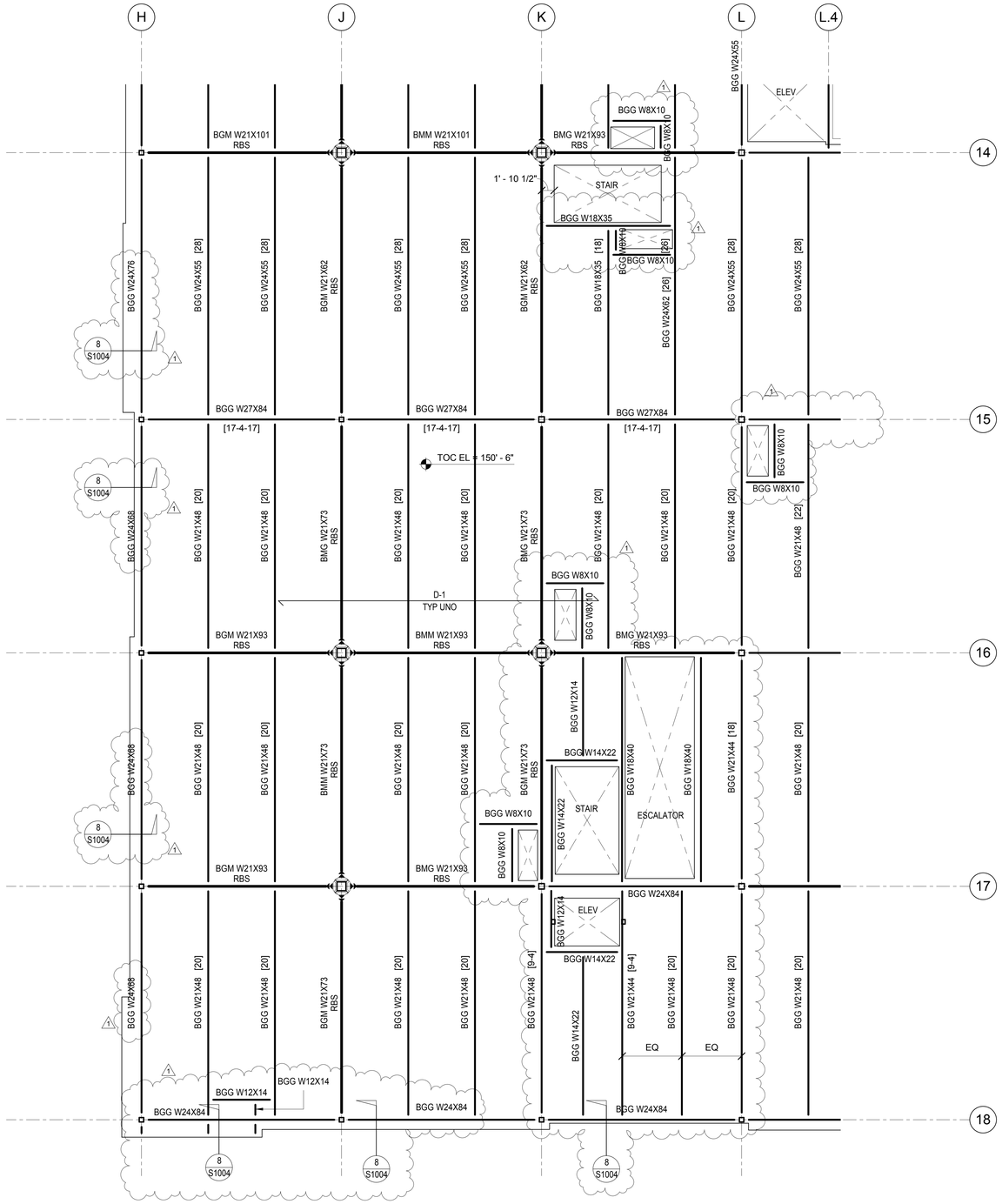

NOTE:
SEE S2201 FOR NOTES.

PROJECT TRUE

BLDG B - LEVEL 2 - NORTHWEST
1/8" = 1'-0"

1

CLIENT

CENTERCAL PROPERTIES, LLC

COPYRIGHT:

Any reproduction or distribution for any purpose other than authorized by IBI Group is forbidden. Written dimensions shall have precedence over scaled dimensions. Contractors shall verify and be responsible for all dimensions and conditions on the job, and IBI Group must be informed of any variations from the dimensions and conditions shown on the drawing. Shop drawings shall be submitted to IBI Group for approval before proceeding with fabrication.

COPYRIGHT © 2016 IBI GROUP

ISSUES

NO.	ISSUANCE	STATUS	DATE
1	STRUCTURAL ADDENDUM 1		05/25/16

SEAL

DANIEL SCHNEIDER
STATE OF WASHINGTON
21669
REGISTERED PROFESSIONAL ENGINEER

EXPIRES

SUB CONSULTANT

MARTIN & associates

JOHN A. MARTIN & ASSOCIATES
Structural Engineers
950 S. Grand Avenue
Los Angeles, Calif. 90015
Phone (213) 483-6490
Fax (213) 483-3084
J14261

PRIME CONSULTANT

IBI

IBI GROUP
18401 Von Karman Avenue, Suite 110
Irvine, CA 92612 United States
tel +1 949 833 5588 ext 146 fax +1 949 833 5511
ibigroup.com

PROJECT

The Village at Totem Lake - Building B
Kirkland, Washington

PROJECT NO:	J14261
DRAWN BY:	Author
CHKD BY:	Checker
SCALE:	As indicated
DATE:	05/25/16

SHEET TITLE

SECOND FLOOR FRAMING PLAN - NORTHWEST

BLDG	SHEET NUMBER	ISSUE
B	S2202	

5/26/2016 12:54:21 PM C:\Users\daniel\Documents\ATW_Totem_Bldg\B_S_2016_danielsn.rvt

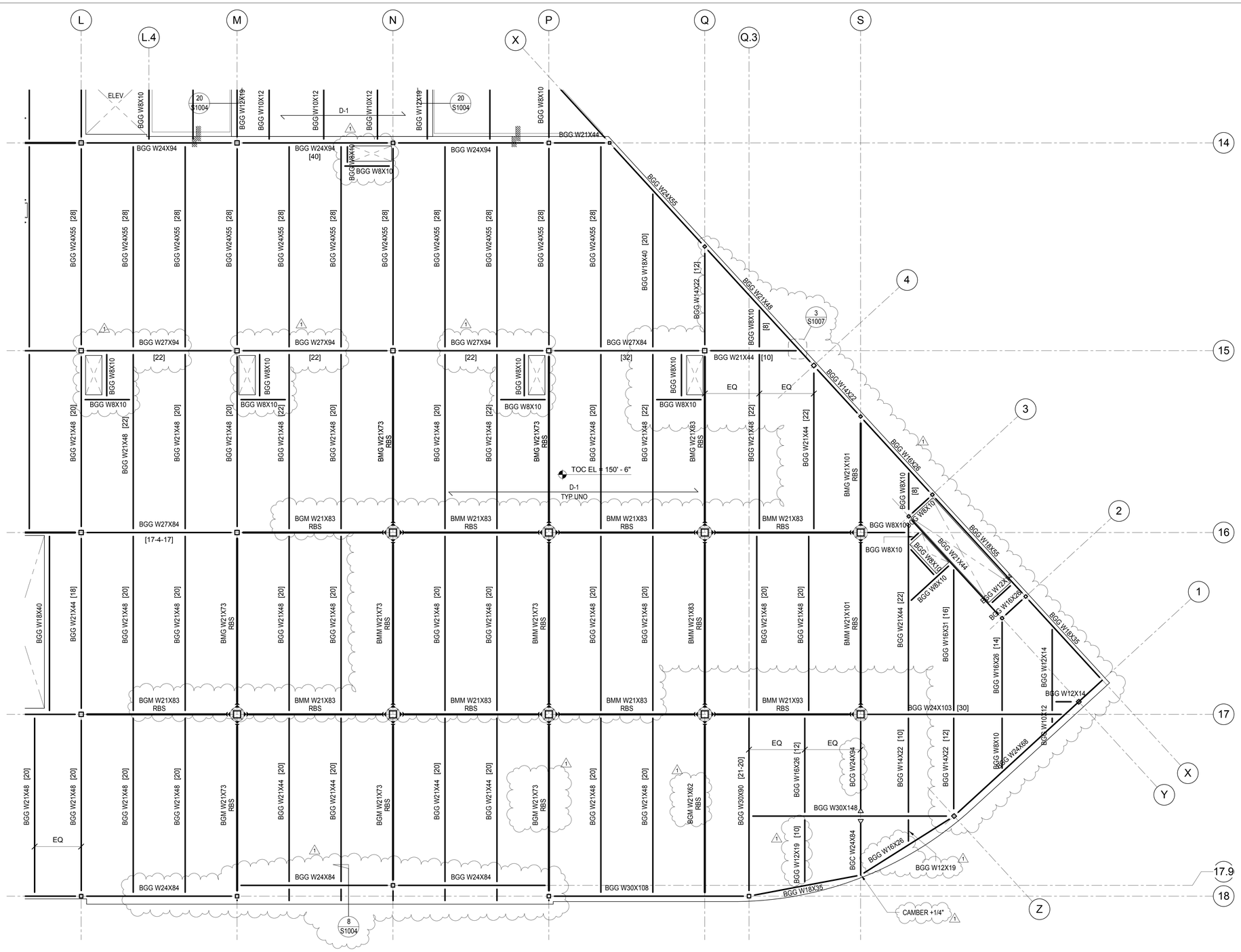

NOTE:
SEE S2201 FOR NOTES.

PROJECT TRUE

BLDG B - LEVEL 2 - SOUTHWEST
1/8" = 1'-0"

1

CLIENT

CENTERCAL PROPERTIES, LLC

COPYRIGHT:

Any reproduction or distribution for any purpose other than authorized by IBI Group is forbidden. Written dimensions shall have precedence over scaled dimensions. Contractors shall verify and be responsible for all dimensions and conditions on site. IBI Group shall be notified of any variations from the dimensions and conditions shown on the drawing. Shop drawings shall be submitted to IBI Group for approval before proceeding with fabrication.

COPYRIGHT © 2016 IBI GROUP

ISSUES

NO.	ISSUANCE	STATUS	DATE
1	STRUCTURAL ADDENDUM 1		05/25/16

SEAL

EXPIRES

SUB CONSULTANT

MARTIN & associates
JOHN A. MARTIN & ASSOCIATES
Structural Engineers
950 S. Grand Avenue
Los Angeles, Calif. 90015
Phone (213) 483-6490
Fax (213) 483-3084
J14261

PRIME CONSULTANT

IBI
IBI GROUP
18401 Von Karman Avenue, Suite 110
Irvine, CA 92612 United States
tel +1 949 833 5588 ext 146 fax +1 949 833 5511
ibigroup.com

PROJECT

The Village at Totem Lake - Building B
Kirkland, Washington

PROJECT NO:	J14261
DRAWN BY:	Author
CHKD BY:	Checker
SCALE:	As indicated
DATE:	05/25/16

SHEET TITLE

SECOND FLOOR FRAMING PLAN - SOUTHWEST

BLDG	SHEET NUMBER	ISSUE
B	S2203	

5/26/2016 12:24:22 PM C:\Users\bkelson\Documents\ATW_Totem_Bldg B_S_2016_bkelson.rvt

STEEL ROOF FRAMING NOTES AND LEGEND

1. SEE ARCHITECTURAL DRAWINGS FOR ROOF SLOPES, GUTTERS, VENTS, DRAINS, SADDLERS, ETC. AND DIMENSIONS NOT INDICATED. REFER TO AND CHECK WITH MECHANICAL DRAWINGS FOR DUCT OPENINGS, EQUIPMENT SIZE AND LOCATION ETC. LOCATE SUPPORTING MEMBERS ACCORDINGLY.
2. FOR GENERAL NOTES SEE SHEETS S0001 THRU S0004. FOR TYPICAL DETAILS, SEE SHEETS S1001 THRU S1009.
3. INDICATES BEAM WITH CONXL SEISMIC MOMENT CONNECTION.
4. INDICATES CANTILEVERED MOMENT CONNECTION
5. INDICATES CHANGE IN SLAB ELEVATION.
6. INDICATES MOMENT FRAME LATERAL BRACING SEE 11/S1006 ARROW SIDE INDICATES BOT FLG BRACING @ 10'-0" MAX
7. <X> INDICATES UPWARD CAMBER IN BEAM (INCHES).
8. TOP OF STEEL ELEVATION AT MOMENT FRAME COLUMNS WITH COLLAR SHALL BE 4" ABOVE FRAMING MEMBERS PER 16/S3102.
9. INDICATES MECHANICAL AREA, SEE MEP DRAWINGS FOR ANCHORAGE AND TYPICAL DETAILS FOR CURBS AND PAD DETAILS.

STEEL ROOF DECK TYPES

RD-1 — INDICATES VERCO PLB36 (36" WIDTH) ROOF DECK x 18 GA GALVANIZED METAL DECK. 10'-0" MAX CLEAR SPAN UNSHORED (2 SPANS MIN).

SIDELAP CONNECTION: VERCO SIDELAP CONNECTION (VSC2) @ 12"

ATTACHMENT TO SUPPORTS: PROVIDE (7)HILTI X-HSN 24 POWDER-DRIVEN FASTENERS (ICC ESR 3592) PER SHEET PER SUPPORT. PROVIDE POWDER DRIVEN FASTENERS @ 6" AT MARGINS AND BEAMS PARALLEL TO DECKING.

RD-2 — INDICATES W2 FORMLOK 18 GA GALVANIZED METAL DECK WITH 4" NORMAL WEIGHT CONCRETE FILL (6" TOTAL THICKNESS) OVER TOP FLUTES WITH #3 @ 16" EACH WAY(1" CLEAR FROM TOP OF SLAB). 11'-0" MAX CLEAR SPAN UNSHORED (2 SPANS MIN.)

SIDELAP CONNECTION: BUTTON PUNCH @24"

ATTACHMENTS TO SUPPORTS: PROVIDE (4)HILTI X-HSN 24 POWDER-DRIVEN FASTENERS (ICC ESR 3592) PER SHEET PER SUPPORT. PROVIDE POWDER-DRIVEN FASTENERS @ 6" AT MARGINS AND BEAMS PARALLEL TO DECKING.

NOTE: SHEAR STUDS PER DETAIL 1/S1003 CAN BE CONSIDERED A SUBSTITUTE FOR ABOVE ATTACHMENTS WHERE OCCURS.

PROJECT TRUE

BLDG B - ROOF - EAST
1/8" = 1'-0"

1

CLIENT

CENTERCAL PROPERTIES, LLC

COPYRIGHT:

Any reproduction or distribution for any purpose other than authorized by IBI Group is forbidden. Written dimensions shall have precedence over scaled dimensions. Contractors shall verify and be responsible for all dimensions and conditions on the job, and report any errors or omissions to the consultant then the dimensions and conditions shown on the drawing. Shop drawings shall be submitted to IBI Group for approval before proceeding with fabrication.

COPYRIGHT © 2016 IBI GROUP

ISSUES

NO.	ISSUANCE	STATUS	DATE
1	STRUCTURAL ADDENDUM 1		05/25/16

SEAL

EXPIRES

SUB CONSULTANT

MARTIN & associates
JOHN A. MARTIN & ASSOCIATES
Structural Engineers
950 S. Grand Avenue
Los Angeles, Calif. 90015
Phone (213) 483-6490
Fax (213) 483-3084
J14261

PRIME CONSULTANT

IBI GROUP
18401 Von Karman Avenue, Suite 110
Irvine, CA 92612 United States
tel +1 949 833 5588 ext 146 fax +1 949 833 5511
ibigroup.com

PROJECT

The Village at Totem Lake - Building B
Kirkland, Washington

PROJECT NO:	J14261
DRAWN BY:	Author
CHKD BY:	Checker
SCALE:	1/8" = 1'-0"
DATE:	05/25/16

SHEET TITLE

ROOF FRAMING PLAN - EAST

BLDG	SHEET NUMBER	ISSUE
B	S2301	

5/26/2016 12:54:23 PM C:\Users\jskelor\Documents\ATW_Totem_Bldg B_S_2016_jskelor.rvt

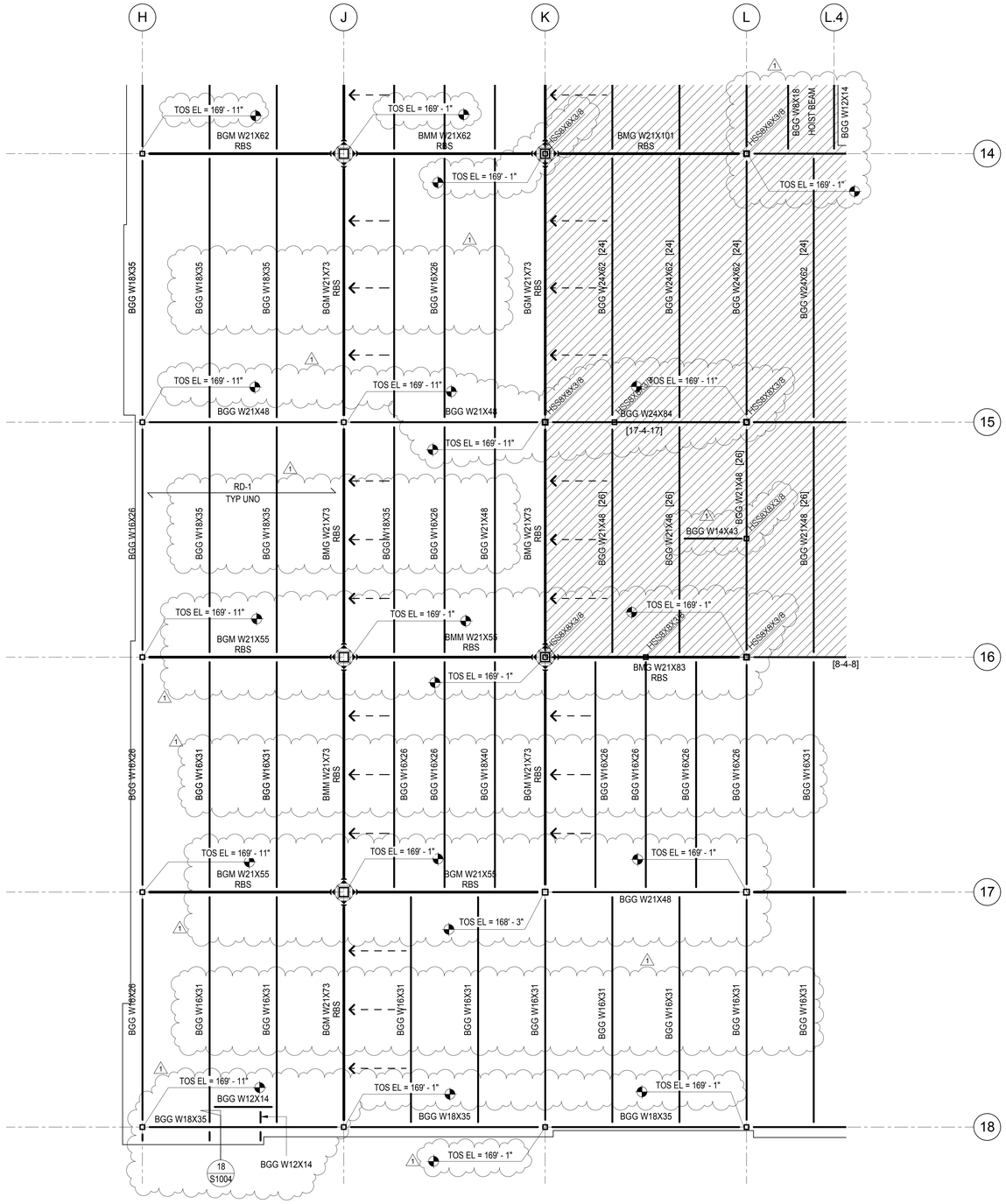

NOTE:
SEE S2301 FOR NOTES.

PROJECT TRUE

BLDG B - ROOF - NORTHWEST
1/8" = 1'-0"
1

CLIENT

CENTERCAL PROPERTIES, LLC

COPYRIGHT:

Any reproduction or distribution for any purpose other than authorized by IBI Group is forbidden. Written dimensions shall have precedence over scaled dimensions. Contractors shall verify and be responsible for all dimensions and conditions on this drawing. No ordinance, regulation or specification shall alter the dimensions and conditions shown on the drawing. Shop drawings shall be submitted to IBI Group for approval before proceeding with fabrication.

COPYRIGHT © 2016 IBI GROUP

ISSUES

NO.	ISSUANCE	STATUS	DATE
1	STRUCTURAL ADDENDUM 1		05/25/16

SEAL

BARRY SCHNEIDER
STATE OF WASHINGTON
21669
REGISTERED
PROFESSIONAL ENGINEER

EXPIRES

SUB CONSULTANT

MARTIN & associates
JOHN A. MARTIN & ASSOCIATES
Structural Engineers
950 S. Grand Avenue
Los Angeles, Calif. 90015
Phone (213) 483-6490
Fax (213) 483-3084
J14261

PRIME CONSULTANT

IBI
IBI GROUP
18401 Von Karman Avenue, Suite 110
Irvine, CA 92612 United States
tel +1 949 833 5588 ext 146 fax +1 949 833 5511
ibigroup.com

PROJECT

The Village at Totem Lake - Building B
Kirkland, Washington

PROJECT NO:	J14261
DRAWN BY:	Author
CHKD' BY:	Checker
SCALE:	As indicated
DATE:	05/25/16

SHEET TITLE

ROOF FRAMING PLAN - NORTHWEST

BLDG	SHEET NUMBER	ISSUE
B	S2302	

5/26/2016 12:54:34 PM C:\Users\ktorin\Documents\ATW_Totem_Bldg\B_S_2016_B#rbim.rvt

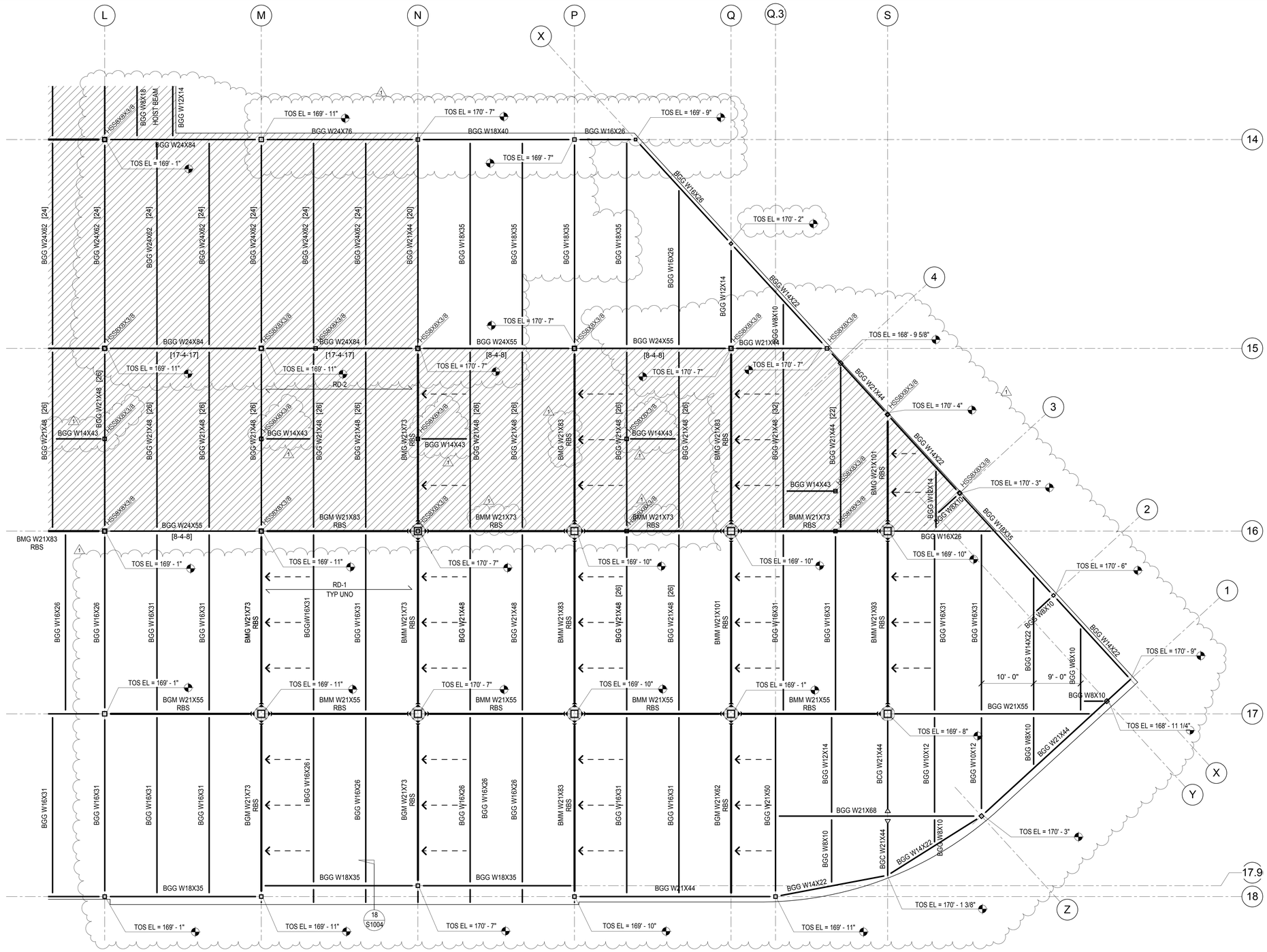

NOTE:
SEE S2301 FOR NOTES.

PROJECT TRUE

BLDG B - ROOF - SOUTHWEST
1/8" = 1'-0"

1

CLIENT

CENTERCAL PROPERTIES, LLC

COPYRIGHT:

Any reproduction or distribution for any purpose other than authorized by IBI Group is forbidden. Written dimensions shall have precedence over scaled dimensions. Contractors shall verify and be responsible for all dimensions and conditions on site. Any errors or omissions shall be reported to IBI Group then the dimensions and conditions shown on the drawing. Shop drawings shall be submitted to IBI Group for approval before proceeding with fabrication.

COPYRIGHT © 2016 IBI GROUP

ISSUES

NO.	ISSUANCE	STATUS	DATE
1	STRUCTURAL ADDENDUM 1		05/25/16

SEAL

BARRY SCHNOLLER
STATE OF WASHINGTON
21669
REGISTERED PROFESSIONAL ENGINEER

EXPIRES

SUB CONSULTANT

MARTIN & associates
JOHN A. MARTIN & ASSOCIATES
Structural Engineers
950 S. Grand Avenue
Los Angeles, Calif. 90015
Phone (213) 483-6490
Fax (213) 483-3084
J14261

PRIME CONSULTANT

IBI
IBI GROUP
18401 Von Karman Avenue, Suite 110
Irvine, CA 92612 United States
tel +1 949 833 5588 ext 146 fax +1 949 833 5511
ibigroup.com

PROJECT

The Village at Totem Lake - Building B
Kirkland, Washington

PROJECT NO:	J14261
DRAWN BY:	Author
CHKD BY:	Checker
SCALE:	As indicated
DATE:	05/25/16

SHEET TITLE

ROOF FRAMING PLAN - SOUTHWEST

BLDG	SHEET NUMBER	ISSUE
B	S2303	

5/26/2016 12:54:28 PM C:\Users\bkelson\Documents\ATW_Totem_Bldg B_S_2016_bkelson.rvt

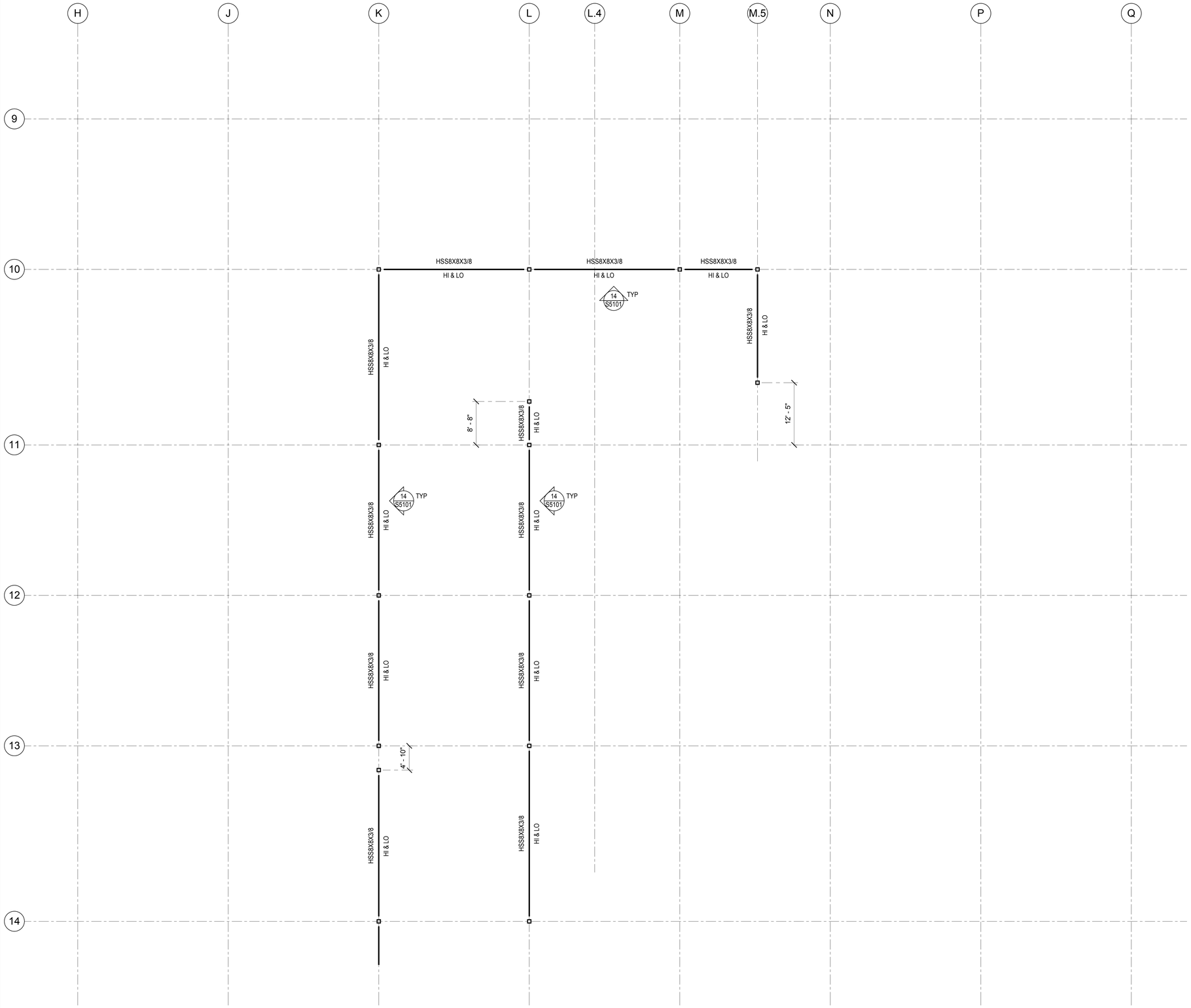

BLDG B - SCREEN WALL FRAMING PLAN - EAST

1/8" = 1'-0"

PROJECT TRUE

1

CLIENT

CENTERCAL PROPERTIES, LLC

COPYRIGHT:

Any reproduction or distribution for any purpose other than authorized by IBI Group is forbidden. Written dimensions shall have precedence over scaled dimensions. Contractors shall verify and be responsible for all dimensions and conditions on site. IBI Group must be notified of any variation from the dimensions and conditions shown on the drawing. Shop drawings shall be submitted to IBI Group for approval before proceeding with fabrication.

COPYRIGHT © 2016 IBI GROUP

ISSUES

NO.	ISSUANCE	STATUS	DATE
1	STRUCTURAL ADDENDUM 1		05/25/16

SEAL

BRADY S. SHINDLER
STATE OF WASHINGTON
21669
REGISTERED
PROFESSIONAL ENGINEER

EXPIRES

SUB CONSULTANT

MARTIN & associates
JOHN A. MARTIN & ASSOCIATES
Structural Engineers
950 S. Grand Avenue
Los Angeles, Calif. 90015
Phone (213) 483-6490
Fax (213) 483-3084
J14261

PRIME CONSULTANT

IBI
IBI GROUP
18401 Von Karman Avenue, Suite 110
Irvine, CA 92612 United States
tel +1 949 833 5588 ext 146 fax +1 949 833 5511
ibigroup.com

PROJECT

The Village at Totem Lake - Building B

Kirkland, Washington

PROJECT NO:	J14261
DRAWN BY:	Author
CHKD BY:	Checker
SCALE:	1/8" = 1'-0"
DATE:	05/25/16

SHEET TITLE

SCREEN WALL FRAMING PLAN - EAST

BLDG	SHEET NUMBER	ISSUE
B	S2401	1

5/26/2016 12:54:28 PM C:\Users\bkelson\Documents\ATW_Totem_Bldg B_S_2016_bkelson.rvt

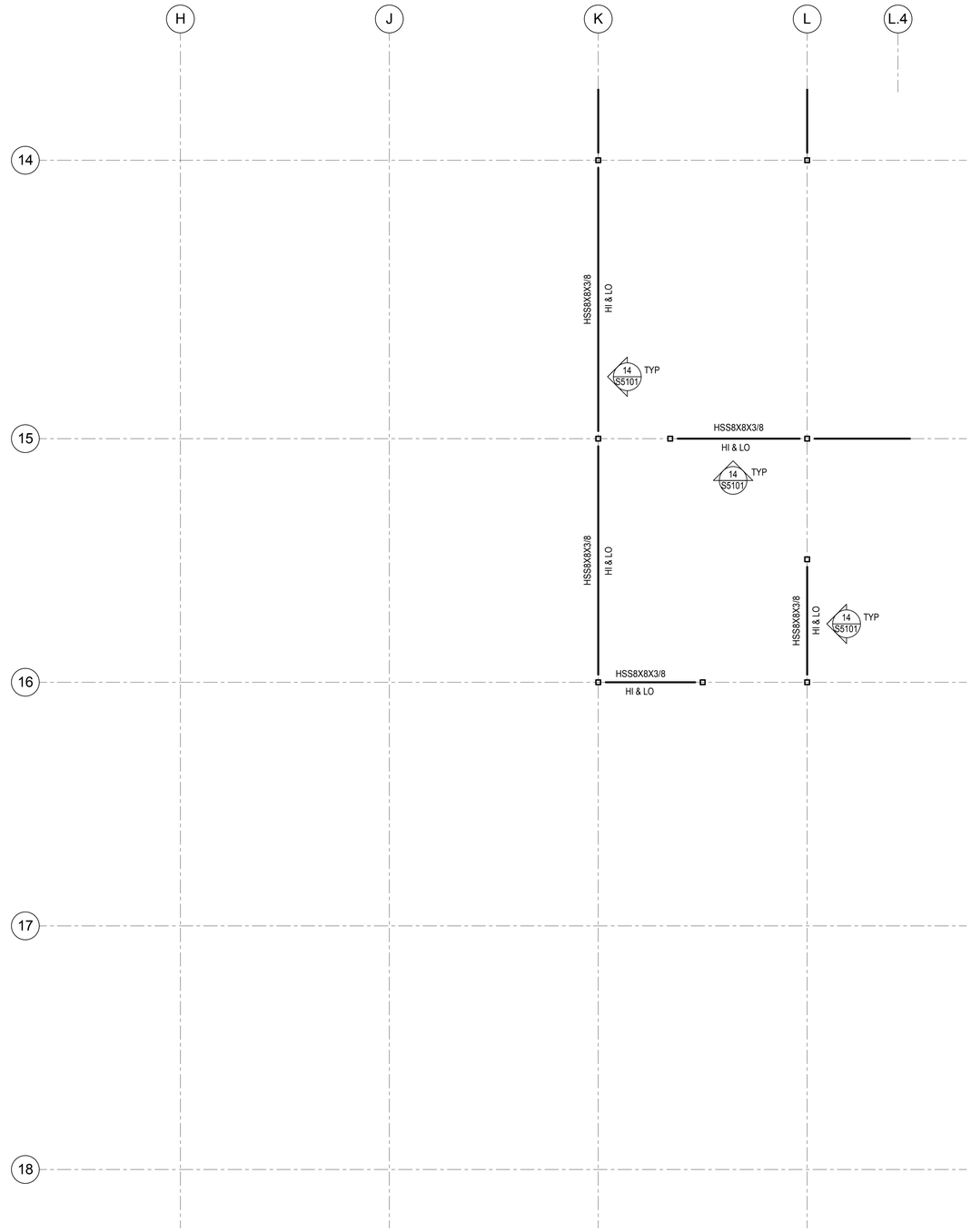

PROJECT TRUE

BLDG B - SCREEN WALL FRAMING PLAN - NORTHWEST
1/8" = 1'-0"

1

CLIENT

CENTERCAL PROPERTIES, LLC

COPYRIGHT:

Any reproduction or distribution for any purpose other than authorized by IBI Group is forbidden. Written dimensions shall have precedence over scaled dimensions. Contractors shall verify and be responsible for all dimensions and conditions on site. Any errors, omissions or conflicts shall be reported to IBI Group before the dimensions and conditions shown on the drawing. Shop drawings shall be submitted to IBI Group for approval before proceeding with fabrication.

COPYRIGHT © 2016 IBI GROUP

ISSUES

NO.	ISSUANCE	STATUS	DATE
1	STRUCTURAL ADDENDUM 1		05/25/16

SEAL

EXPIRES

SUB CONSULTANT

MARTIN & associates
JOHN A. MARTIN & ASSOCIATES
Structural Engineers
950 S. Grand Avenue
Los Angeles, Calif. 90015
Phone (213) 483-6490
Fax (213) 483-3084
J14261

PRIME CONSULTANT

IBI
IBI GROUP
18401 Von Karman Avenue, Suite 110
Irvine, CA 92612 United States
tel +1 949 833 5588 ext 146 fax +1 949 833 5511
ibigroup.com

PROJECT

The Village at Totem Lake - Building B
Kirkland, Washington

PROJECT NO:	J14261
DRAWN BY:	Author
CHKD BY:	Checker
SCALE:	1/8" = 1'-0"
DATE:	05/25/16

SHEET TITLE

SCREEN WALL FRAMING PLAN - NORTHWEST

BLDG	SHEET NUMBER	ISSUE
B	S2402	1

5/26/2016 12:54:27 PM C:\Users\bkirton\Documents\ATW_Totem_Bldg B_S_2016_bkirton.rvt

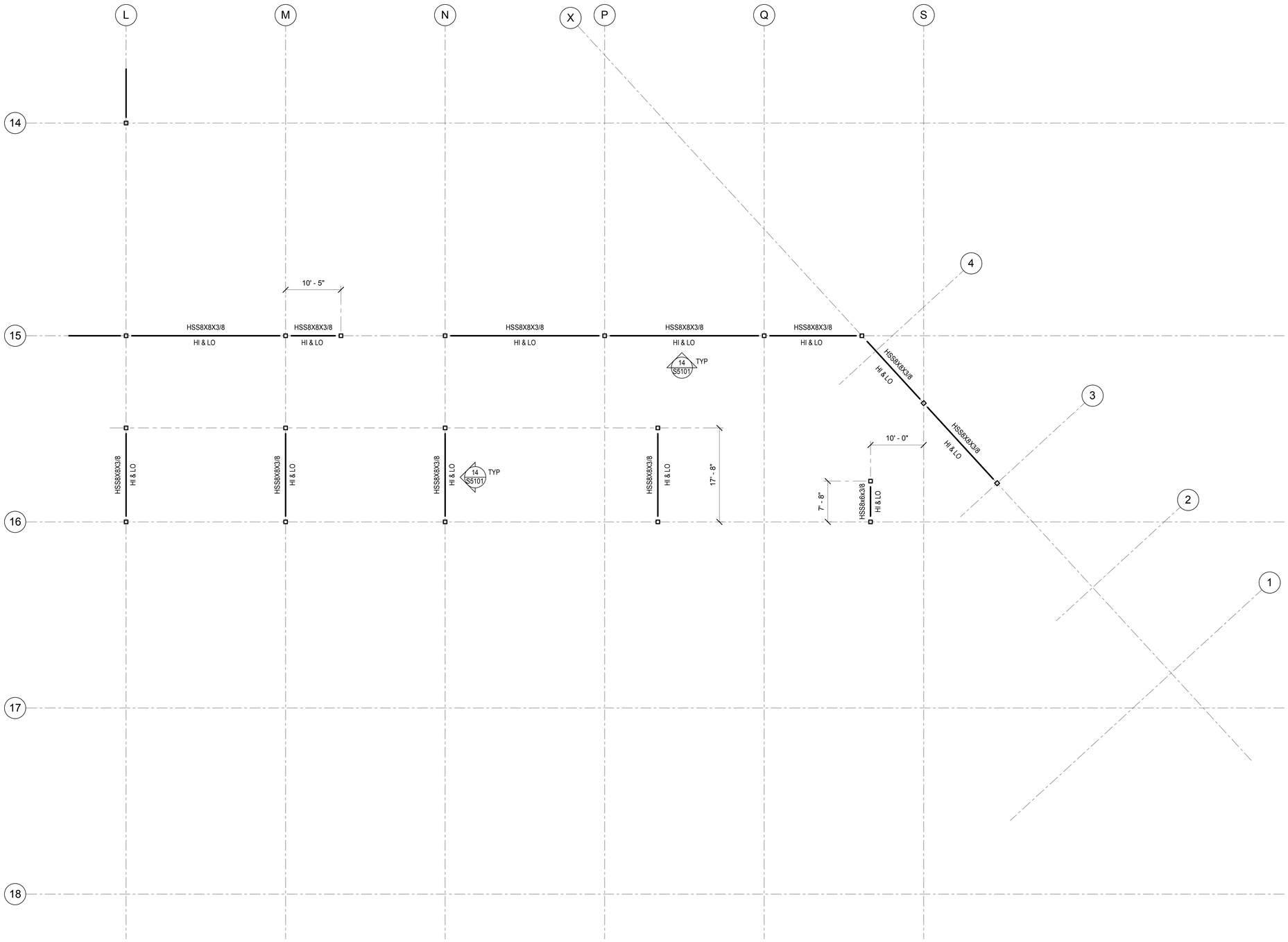

PROJECT TRUE

BLDG B - SCREEN WALL FRAMING PLAN - SOUTHWEST
1/8" = 1'-0"

1

CLIENT

CENTERCAL PROPERTIES, LLC

COPYRIGHT:

Any reproduction or distribution for any purpose other than authorized by IBI Group is forbidden. Written dimensions shall have precedence over scaled dimensions. Contractors shall verify and be responsible for all dimensions and conditions on site. IBI Group must be notified of any variation from the dimensions and conditions shown on the drawing. Shop drawings shall be submitted to IBI Group for approval before proceeding with fabrication.

COPYRIGHT © 2016 IBI GROUP

ISSUES

NO.	ISSUANCE	STATUS	DATE
1	STRUCTURAL ADDENDUM 1		05/25/16

SEAL

DANIEL SCHNEIDER
STATE OF WASHINGTON
21669
REGISTERED
PROFESSIONAL ENGINEER

EXPIRES

SUB CONSULTANT

MARTIN & associates
JOHN A. MARTIN & ASSOCIATES
Structural Engineers
950 S. Grand Avenue
Los Angeles, Calif. 90015
Phone (213) 483-6490
Fax (213) 483-3084
J14261

PRIME CONSULTANT

IBI
IBI GROUP
18401 Von Karman Avenue, Suite 110
Irvine, CA 92612 United States
tel +1 949 833 5588 ext 146 fax +1 949 833 5511
ibigroup.com

PROJECT

The Village at Totem Lake - Building B
Kirkland, Washington

PROJECT NO:	J14261
DRAWN BY:	Author
CHKD BY:	Checker
SCALE:	1/8" = 1'-0"
DATE:	05/25/16

SHEET TITLE

SCREEN WALL FRAMING PLAN - SOUTHWEST

BLDG	SHEET NUMBER	ISSUE
B	S2403	1

5/26/2016 12:54:28 PM C:\Users\jtaylor\Documents\ATW_Totem_B\bjB_S_2016_jtaylor.rvt

BLDG B - ROOF																							BLDG B - ROOF
168' - 6" / BLDG B - LEVEL 2																							168' - 6" / BLDG B - LEVEL 2
150' - 6" / BLDG B - LEVEL 1-30.5	HSS6X6X1/2	HSS8X6X1/2	HSS8X6X3/8	HSS6X6X1/2	HSS8X8X3/8	HSS8X8X1/2	HSS8X8X3/8	HSS10X10X5/8	HSS10X10X5/8	HSS8X8X1/2	HSS6X6X3/8	HSS6X6X3/8	HSS6X6X3/8	HSS10X10X1/2 (1)	HSS10X10X5/8	HSS6X6X3/8	HSS6X6X3/8	HSS10X10X1/2 (1)	HSS8X8X1/2	HSS6X6X3/8	HSS4X4X3/8 (1)	HSS6X6X1/4	150' - 6" / BLDG B - LEVEL 1-30.5
130' - 6"																							130' - 6"
Column Locations	**H-9.3**	**H-15**	**H-18**	**H.3-9**	**K-9**	**K-18**	**L-9**	**L-15**	**L-17**	**L-18**	**L.4-13.7**	**L.9-11.6**	**M-13.6**	**M-14** (1)	**M-15**	**M.5-11**	**M.6-12.6**	**N-10.3** (1)	**N-14**	**N.2-13.6**	**N.4-12.7**	**N.7-10.3**	
	3/4"x14"x1'-2"	3/4"x16"x1'-4"	3/4"x16"x1'-4"	3/4"x14"x1'-2"	3/4"x16"x1'-4"	3/4"x16"x1'-4"	3/4"x16"x1'-4"	1"x18"x1'-6"	1"x18"x1'-6"	3/4"x16"x1'-4"	3/4"x14"x1'-2"	3/4"x14"x1'-2"	3/4"x14"x1'-2"	1"x18"x1'-6"	1"x18"x1'-6"	3/4"x14"x1'-2"	3/4"x14"x1'-2"	1"x18"x1'-6"	3/4"x16"x1'-4"	3/4"x14"x1'-2"	3/4"x12"x1'-0"	3/4"x14"x1'-2"	BASE PLATE SIZE (t x B x N) GR 50
	4 - 3/4"Ø F1554 GR 36	4 - 3/4"Ø F1554 GR 36	4 - 3/4"Ø F1554 GR 36	4 - 3/4"Ø F1554 GR 36	4 - 3/4"Ø F1554 GR 36	4 - 3/4"Ø F1554 GR 36	4 - 3/4"Ø F1554 GR 36	4 - 3/4"Ø F1554 GR 36	4 - 3/4"Ø F1554 GR 36	4 - 3/4"Ø F1554 GR 36	4 - 3/4"Ø F1554 GR 36	4 - 3/4"Ø F1554 GR 36	4 - 3/4"Ø F1554 GR 36	4 - 3/4"Ø F1554 GR 36	4 - 3/4"Ø F1554 GR 36	4 - 3/4"Ø F1554 GR 36	4 - 3/4"Ø F1554 GR 36	4 - 3/4"Ø F1554 GR 36	4 - 3/4"Ø F1554 GR 36	4 - 3/4"Ø F1554 GR 36	4 - 3/4"Ø F1554 GR 36	4 - 3/4"Ø F1554 GR 36	ANCHOR BOLTS NUMBER, SIZE AND ASTM GRADE
	4 S4001	4 S4001	4 S4001	4 S4001	4 S4001	4 S4001	4 S4001	4 S4001	4 S4001	4 S4001	4 S4001	4 S4001	4 S4001	4 S4001	4 S4001	4 S4001	4 S4001	4 S4001	4 S4001	4 S4001	4 S4001	4 S4001	COLUMN BASE CONN DETAIL

BLDG B - ROOF																BLDG B - ROOF
168' - 6" / BLDG B - LEVEL 2																168' - 6" / BLDG B - LEVEL 2
150' - 6" / BLDG B - LEVEL 1-30.5	HSS4X4X3/8 (1)	HSS8X8X3/8	HSS6X6X1/4	HSS6X6X1/4	HSS8X8X5/8	HSS6X6X3/8	HSS6X6X5/16 (1)	HSS8X8X3/8	HSS4X4X3/8	HSS6X6X1/2	HSS8X8X3/8	HSS6X6X3/8	HSS6X6X1/2	HSS8X8X1/2	HSS6X6X3/8	150' - 6" / BLDG B - LEVEL 1-30.5
130' - 6"																130' - 6"
Column Locations	**N.8-12.9**	**P-14**	**P.8-9**	**P.8-9.4**	**Q.3-18**	**X-2**	**X-3** (1)	**X-4**	**X-13.5**	**X-14**	**Y-1**	**Y-2**	**Y-3**	**Z-1**	**Q-X**	
	3/4"x12"x1'-0"	3/4"x16"x1'-4"	3/4"x14"x1'-2"	3/4"x14"x1'-2"	3/4"x16"x1'-4"	3/4"x14"x1'-2"	3/4"x14"x1'-2"	3/4"x16"x1'-4"	3/4"x12"x1'-0"	3/4"x14"x1'-2"	3/4"x16"x1'-4"	3/4"x14"x1'-2"	3/4"x14"x1'-2"	3/4"x16"x1'-4"	3/4"x14"x1'-2"	BASE PLATE SIZE (t x B x N) GR 50
	4 - 3/4"Ø F1554 GR 36	4 - 3/4"Ø F1554 GR 36	4 - 3/4"Ø F1554 GR 36	4 - 3/4"Ø F1554 GR 36	4 - 3/4"Ø F1554 GR 36	4 - 3/4"Ø F1554 GR 36	4 - 3/4"Ø F1554 GR 36	4 - 3/4"Ø F1554 GR 36	4 - 3/4"Ø F1554 GR 36	4 - 3/4"Ø F1554 GR 36	4 - 3/4"Ø F1554 GR 36	4 - 3/4"Ø F1554 GR 36	4 - 3/4"Ø F1554 GR 36	4 - 3/4"Ø F1554 GR 36	4 - 3/4"Ø F1554 GR 36	ANCHOR BOLTS NUMBER, SIZE AND ASTM GRADE
	4 S4001	4 S4001	4 S4001	4 S4001	4 S4001	4 S4001	4 S4001	4 S4001	4 S4001	4 S4001	4 S4001	4 S4001	4 S4001	4 S4001	4 S4001	COLUMN BASE CONN DETAIL

CLIENT

CENTERCAL PROPERTIES, LLC

COPYRIGHT:

Any reproduction or distribution for any purpose other than authorized by IBI Group is forbidden. Written dimensions shall have precedence over scaled dimensions. Contractors shall verify and be responsible for all dimensions and conditions on the job, and report any errors or omissions to the architect then the dimensions and conditions shown on the drawing. Shop drawings shall be submitted to IBI Group for approval before proceeding with fabrication.

COPYRIGHT © 2016 IBI GROUP

ISSUES

NO.	ISSUANCE	STATUS	DATE
1	STRUCTURAL ADDENDUM 1		05/25/16

SEAL

EXPIRES

SUB CONSULTANT

MARTIN & associates

JOHN A. MARTIN & ASSOCIATES
Structural Engineers
950 S. Grand Avenue
Los Angeles, Calif. 90015
Phone (213) 483-6490
Fax (213) 483-3084
J14261

PRIME CONSULTANT

IBI

IBI GROUP
18401 Von Karman Avenue, Suite 110
Irvine, CA 92612 United States
tel +1 949 833 5588 ext 146 fax +1 949 833 5511
ibigroup.com

PROJECT

The Village at Totem Lake - Building B
Kirkland, Washington

PROJECT NO:	J14261
DRAWN BY:	BK
CHKD BY:	BR
SCALE:	1/8" = 1'-0"
DATE:	05/25/16

SHEET TITLE

NON-FRAME COLUMN SCHEDULE

BLDG	SHEET NUMBER	ISSUE
B	S3001	

5/26/2016 12:54:28 PM C:\Users\bkaiser\Documents\ATW_Totem_B\bigB_S_2016_bkaiser.rvt

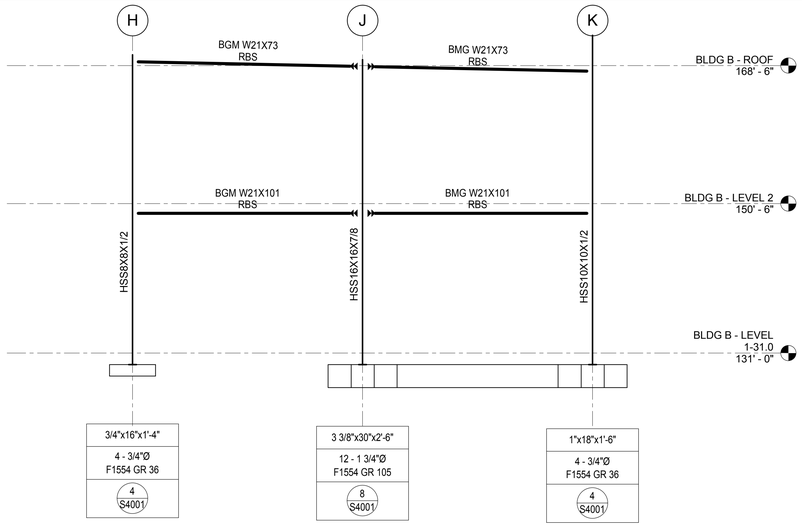

MOMENT FRAME ELEVATION - LINE 10
1/8" = 1'-0"
B

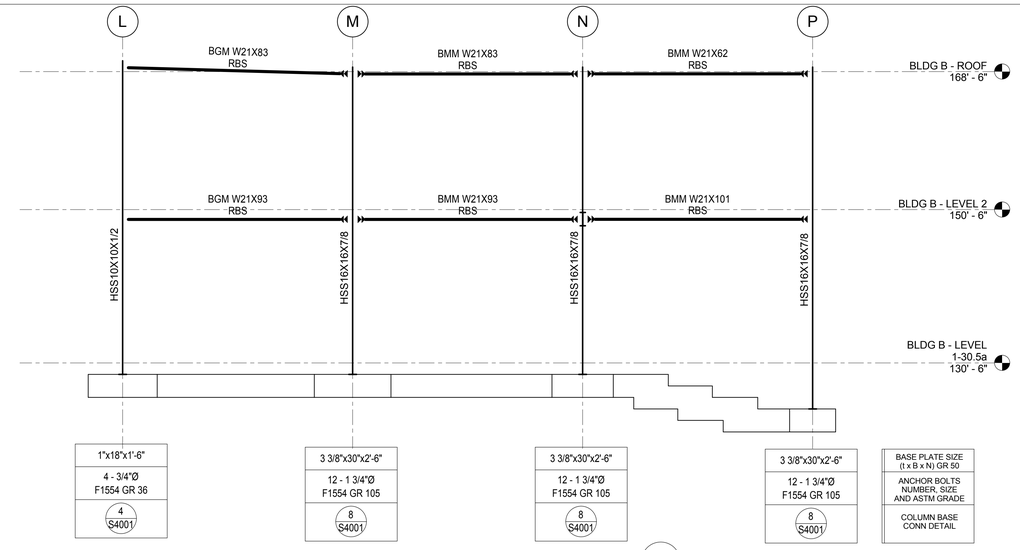

MOMENT FRAME ELEVATION - LINE 10
1/8" = 1'-0"
A

BLDG B - SCREEN
WALL FRAMING
PLAN
177' - 0"

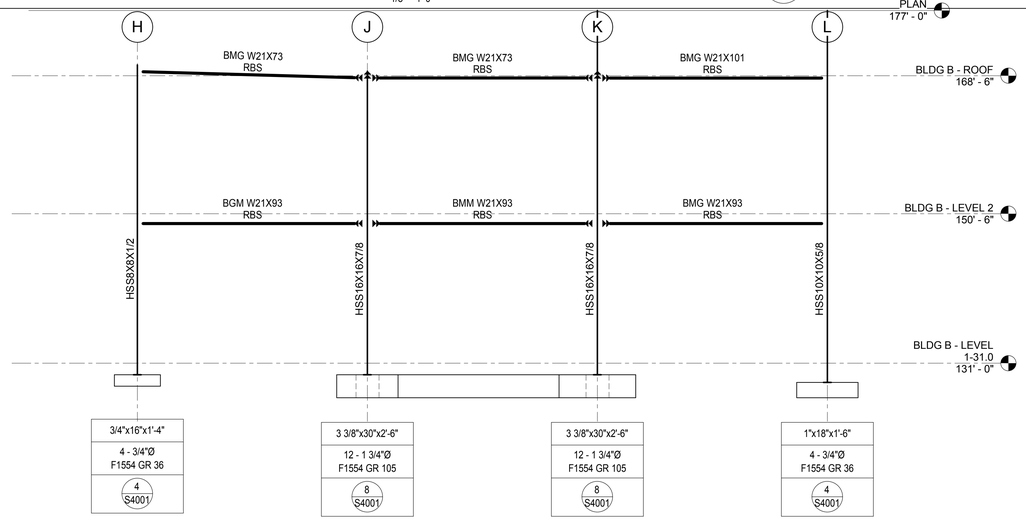

MOMENT FRAME ELEVATION - LINE 12
1/8" = 1'-0"
D

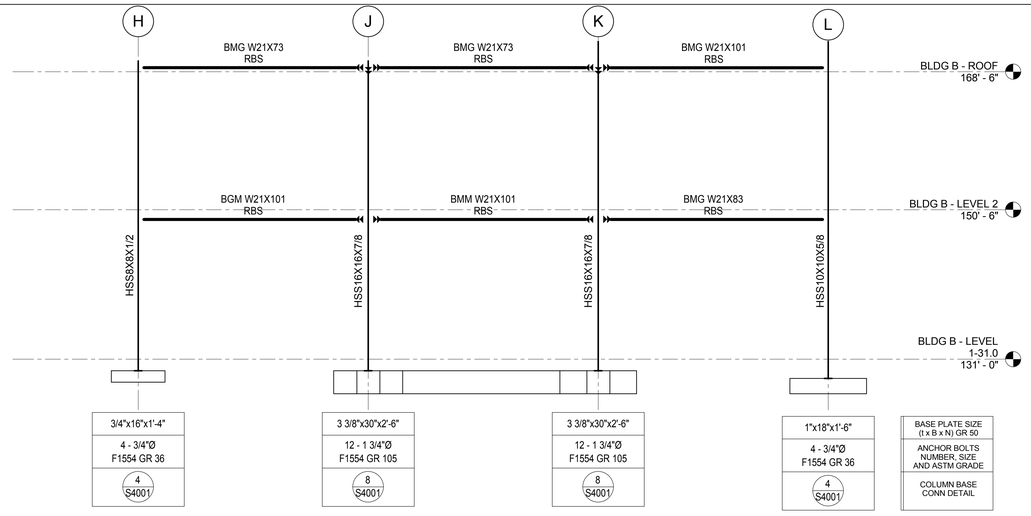

MOMENT FRAME ELEVATION - LINE 11
1/8" = 1'-0"
C

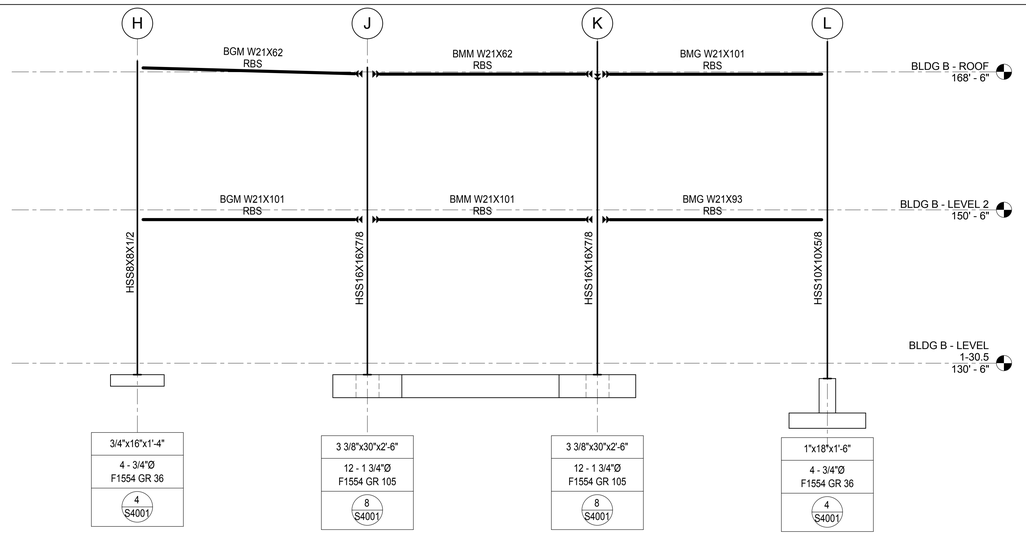

MOMENT FRAME ELEVATION - LINE 14
1/8" = 1'-0"
F

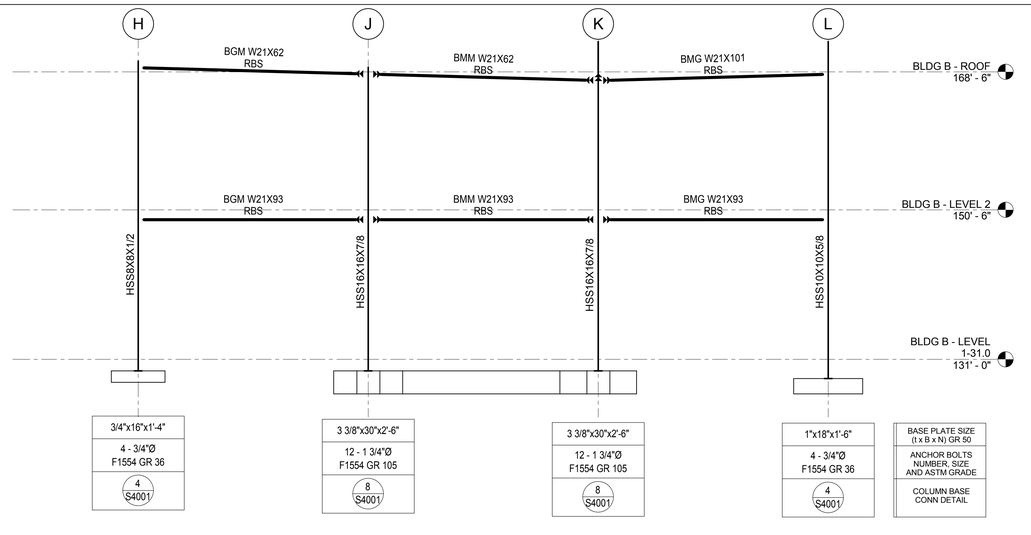

MOMENT FRAME ELEVATION - LINE 13
1/8" = 1'-0"
E

CLIENT

CENTERCAL PROPERTIES, LLC

COPYRIGHT:

Any reproduction or distribution for any purpose other than authorized by IBI Group is forbidden. Written dimensions shall have precedence over scaled dimensions. Contractors shall verify and be responsible for all dimensions and conditions on the job, and report any errors or omissions to the architect then the dimensions and conditions shown on the drawing. Shop drawings shall be submitted to IBI Group for approval before proceeding with fabrication.

COPYRIGHT © 2016 IBI GROUP

ISSUES

NO.	ISSUANCE	STATUS	DATE

SEAL

SUB CONSULTANT

MARTIN & associates
JOHN A. MARTIN & ASSOCIATES
Structural Engineers
950 S. Grand Avenue
Los Angeles, Calif. 90015
Phone (213) 483-6490
Fax (213) 483-3084
J14261

PRIME CONSULTANT

IBI
IBI GROUP
18401 Von Karman Avenue, Suite 110
Irvine, CA 92612 United States
tel +1 949 833 5588 ext 146 fax +1 949 833 5511
ibigroup.com

PROJECT

The Village at Totem Lake - Building B
Kirkland, Washington

PROJECT NO:	J14261
DRAWN BY:	Author
CHKD BY:	Checker
SCALE:	1/8" = 1'-0"
DATE:	05/25/16

SHEET TITLE

MOMENT FRAME ELEVATIONS

BLDG	SHEET NUMBER	ISSUE
B	S3002	

5/26/2016 12:44:30 PM C:\Users\bkirton\Documents\ATW_Totem_Bldg B_S_2016_bkirton.rvt

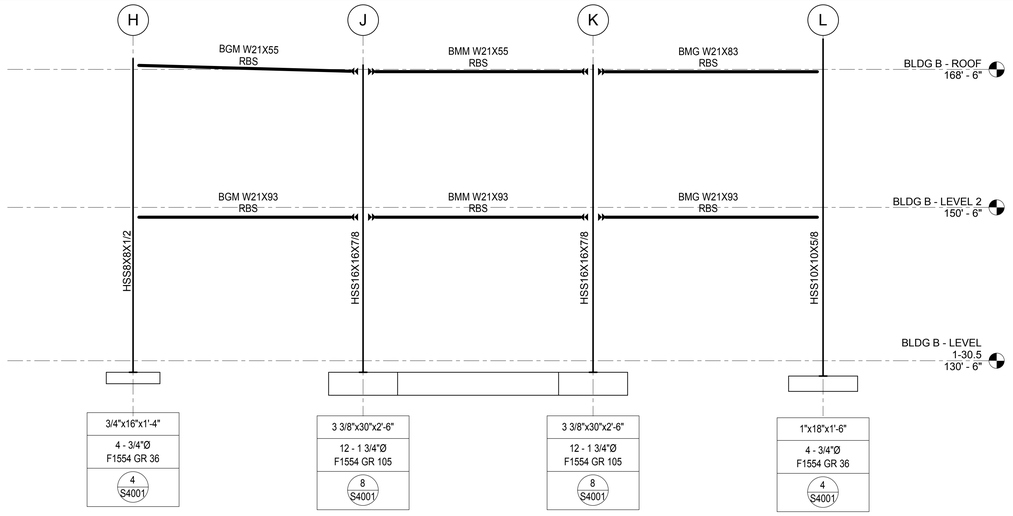

MOMENT FRAME ELEVATION - LINE 16 (H)
1/8" = 1'-0"

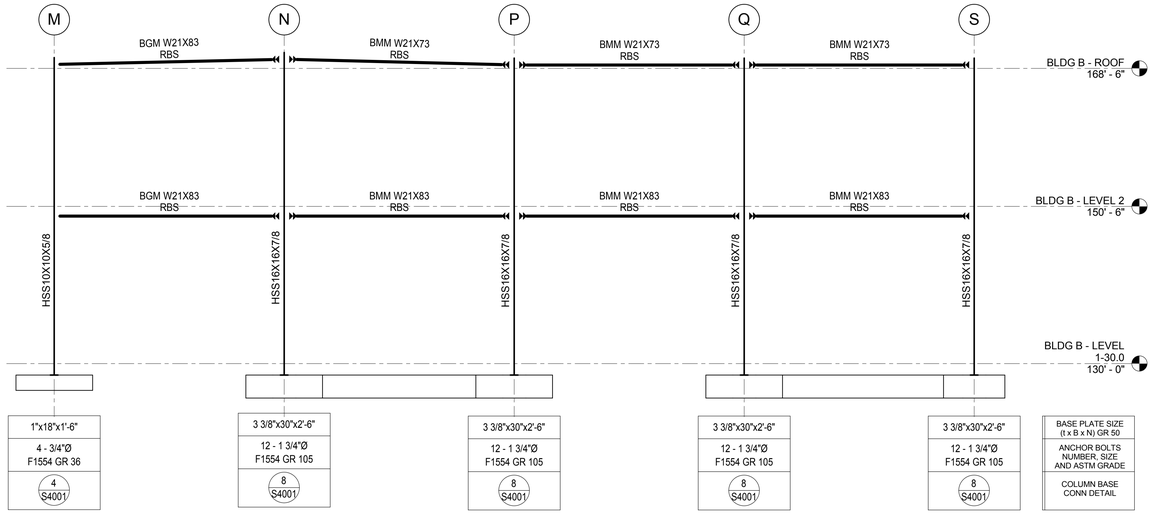

MOMENT FRAME ELEVATION - LINE 16 (G)
1/8" = 1'-0"

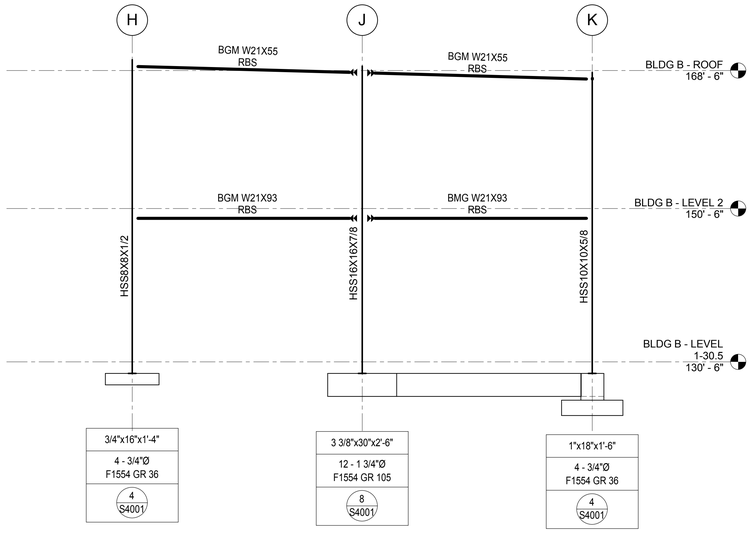

MOMENT FRAME ELEVATION - LINE 17 (K)
1/8" = 1'-0"

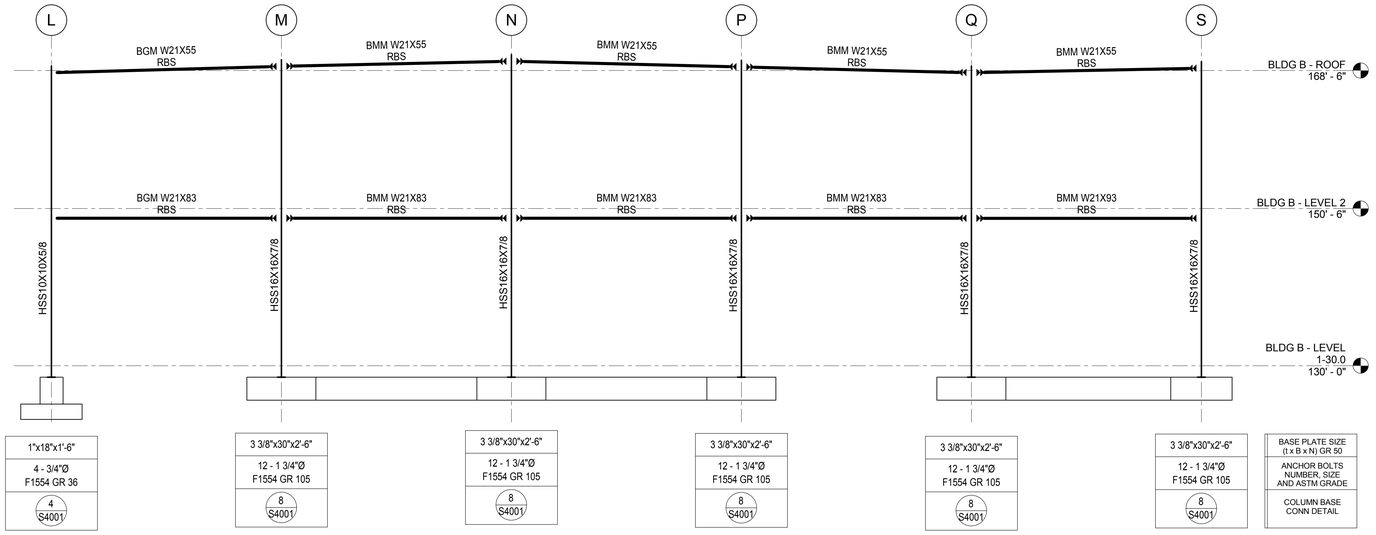

MOMENT FRAME ELEVATION - LINE 17 (J)
1/8" = 1'-0"

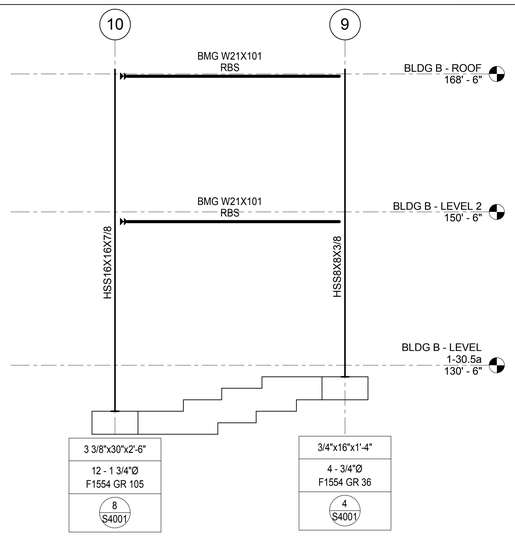

MOMENT FRAME ELEVATION - LINE P (N)
1/8" = 1'-0"

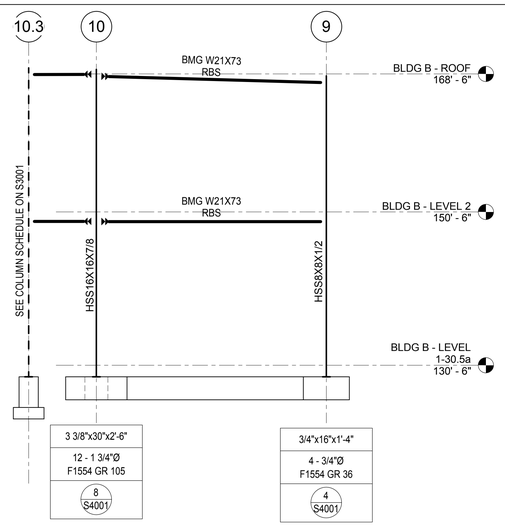

MOMENT FRAME ELEVATION - LINE N (M)
1/8" = 1'-0"

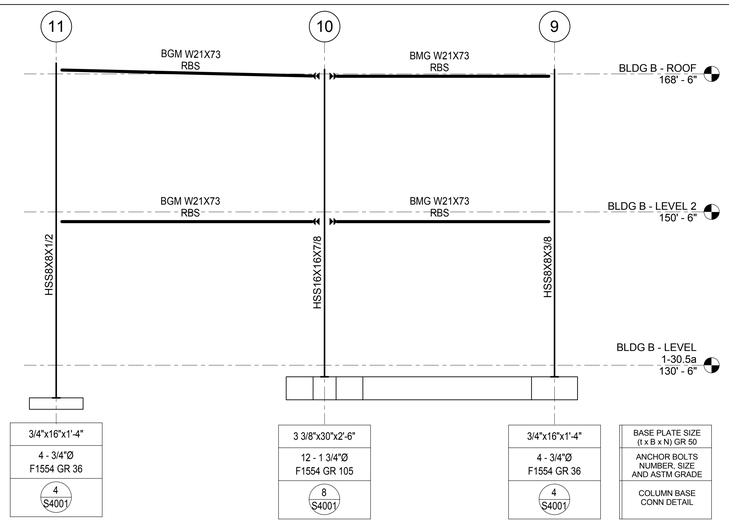

MOMENT FRAME ELEVATION - LINE M (L)
1/8" = 1'-0"

CLIENT

CENTERCAL PROPERTIES, LLC

COPYRIGHT:

Any reproduction or distribution for any purpose other than authorized by IBI Group is forbidden. Written dimensions shall have precedence over scaled dimensions. Contractors shall verify and be responsible for all dimensions and conditions on this drawing. No ambiguities or discrepancies shall be resolved by the dimensions and conditions shown on the drawing. Shop drawings shall be submitted to IBI Group for approval before proceeding with fabrication.

COPYRIGHT © 2016 IBI GROUP

ISSUES

NO.	ISSUANCE	STATUS	DATE

SEAL

EXPIRES

SUB CONSULTANT

MARTIN & associates
JOHN A. MARTIN & ASSOCIATES
Structural Engineers
950 S. Grand Avenue
Los Angeles, Calif. 90015
Phone (213) 483-6490
Fax (213) 483-3084
J14261

PRIME CONSULTANT

IBI
IBI GROUP
18401 Von Karman Avenue, Suite 110
Irvine, CA 92612 United States
tel+1 949 833 5588 ext 146 fax +1 949 833 5511
ibigroup.com

PROJECT

The Village at Totem Lake - Building B
Kirkland, Washington

PROJECT NO:	J14261
DRAWN BY:	Author
CHKD BY:	Checker
SCALE:	1/8" = 1'-0"
DATE:	05/25/16

SHEET TITLE

MOMENT FRAME ELEVATIONS

BLDG	SHEET NUMBER	ISSUE
B	S3003	

C:\Users\jbarton\Documents\ATW_Totem_Bldg B_S_2016_jbarton.rvt

5/26/2016 12:24:32 PM

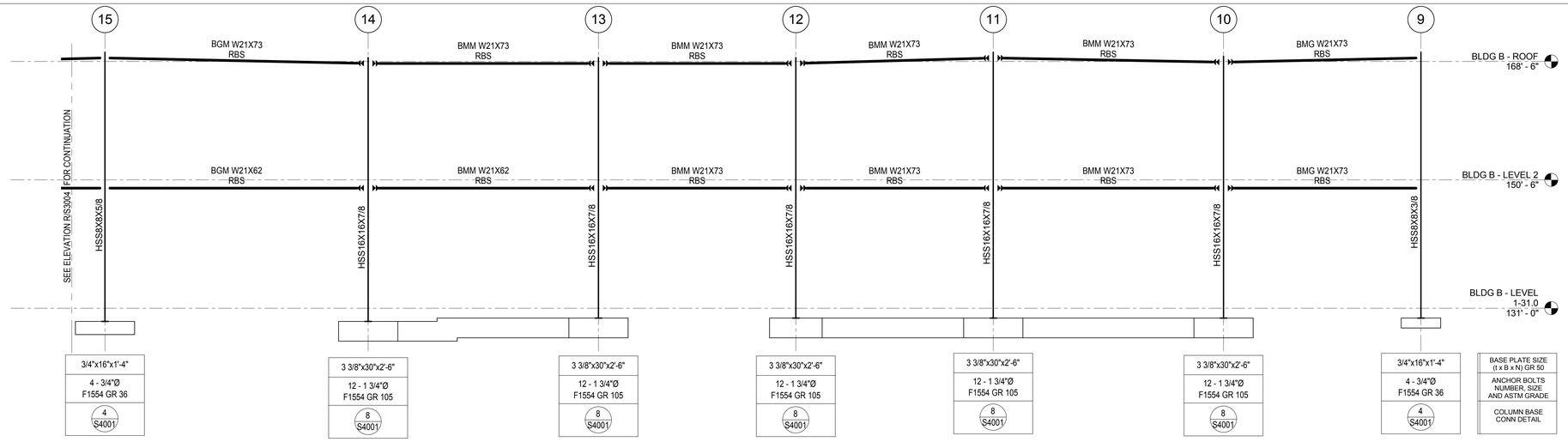

MOMENT FRAME ELEVATION - LINE J (P)

1/8" = 1'-0"

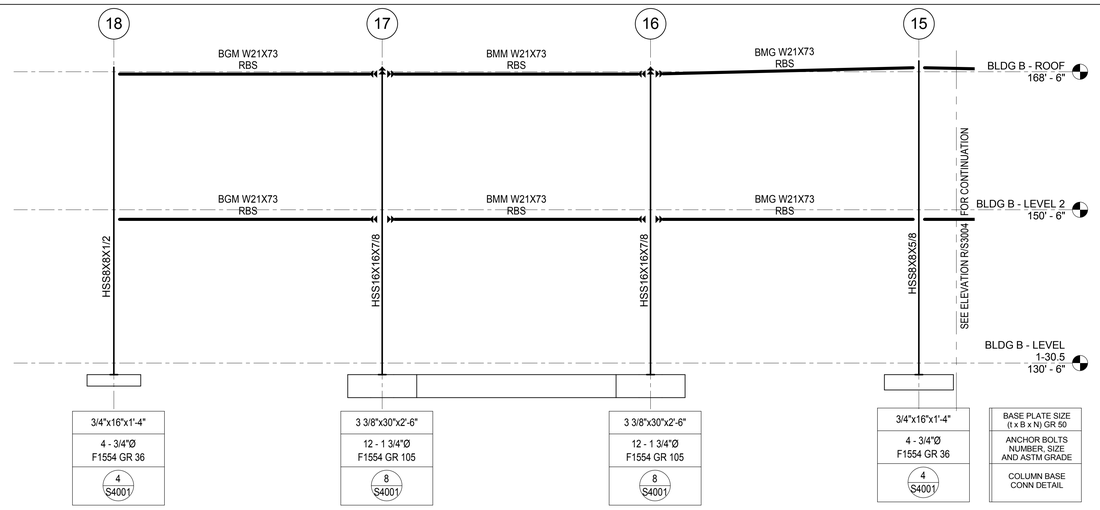

MOMENT FRAME ELEVATION - LINE J (R)

1/8" = 1'-0"

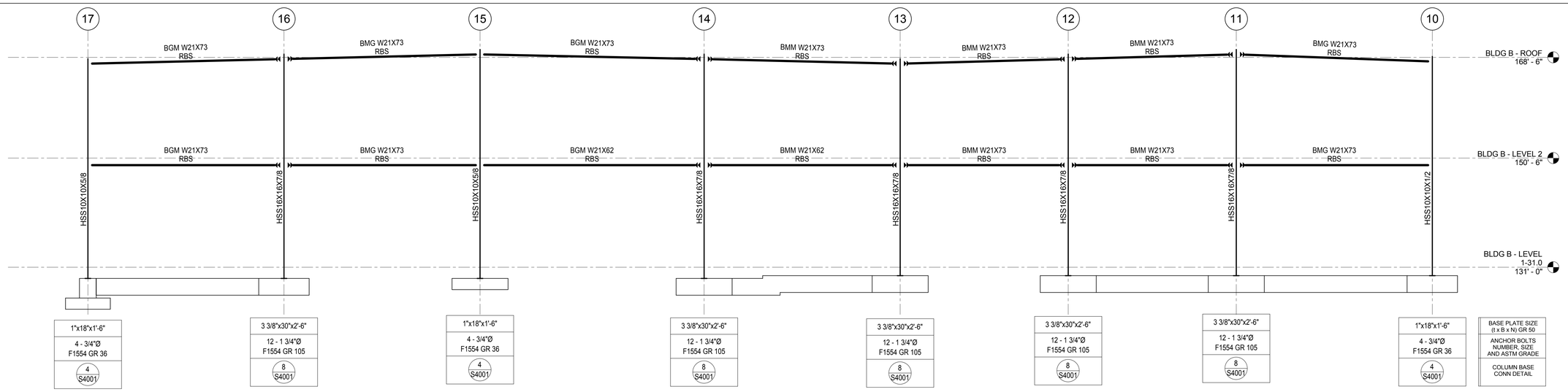

MOMENT FRAME ELEVATION - LINE K (S)

1/8" = 1'-0"

CLIENT

CENTERCAL PROPERTIES, LLC

COPYRIGHT:

Any reproduction or distribution for any purpose other than authorized by IBI Group is forbidden. Written dimensions shall have precedence over scaled dimensions. Contractors shall verify and be responsible for all dimensions and conditions on the job, and report any errors or omissions to the Consultant then the dimensions and conditions shown on the drawing. Shop drawings shall be submitted to IBI Group for approval before proceeding with fabrication.

COPYRIGHT © 2016 IBI GROUP

ISSUES

NO.	ISSUANCE	STATUS	DATE

SEAL

RANDY SCHNEIDER
STATE OF WASHINGTON
21869
REGISTERED PROFESSIONAL ENGINEER

EXPIRES

SUB CONSULTANT

MARTIN & associates

JOHN A. MARTIN & ASSOCIATES
Structural Engineers
950 S. Grand Avenue
Los Angeles, Calif. 90015
Phone (213) 483-6490
Fax (213) 483-3084
J14261

PRIME CONSULTANT

IBI

IBI GROUP
18401 Von Karman Avenue, Suite 110
Irvine, CA 92612 United States
tel +1 949 833 5588 ext 146 fax +1 949 833 5511
ibigroup.com

PROJECT

The Village at Totem Lake - Building B
Kirkland, Washington

PROJECT NO:	J14261
DRAWN BY:	Author
CHKD BY:	Checker
SCALE:	1/8" = 1'-0"
DATE:	05/25/16

SHEET TITLE

MOMENT FRAME ELEVATIONS

BLDG	SHEET NUMBER	ISSUE
B	S3004	

5/26/2016 12:24:33 PM C:\Users\bkirker\Documents\ATW_Totem_Bldg B_S_2016_bkirker.rvt

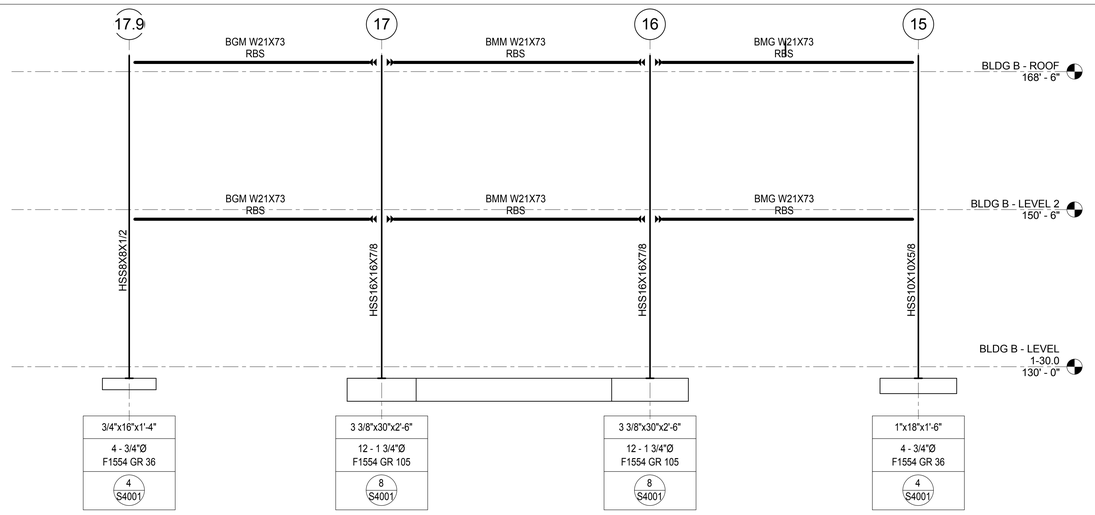

MOMENT FRAME ELEVATION - LINE N (U)

1/8" = 1'-0"

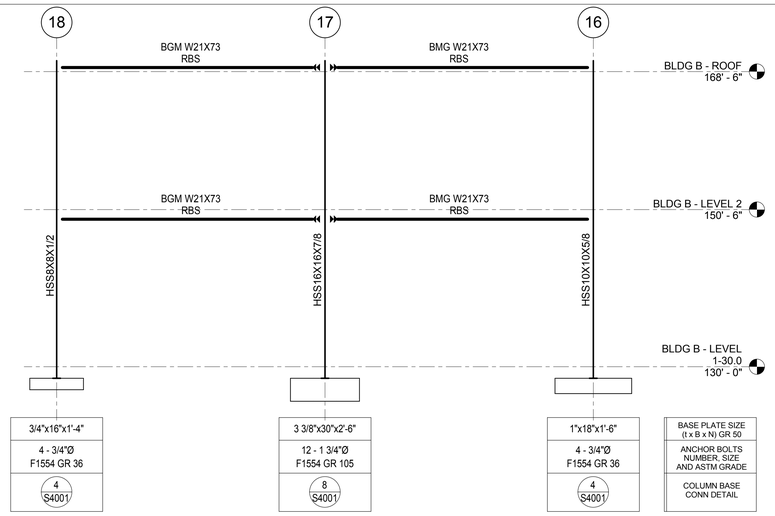

MOMENT FRAME ELEVATION - LINE M (T)

1/8" = 1'-0"

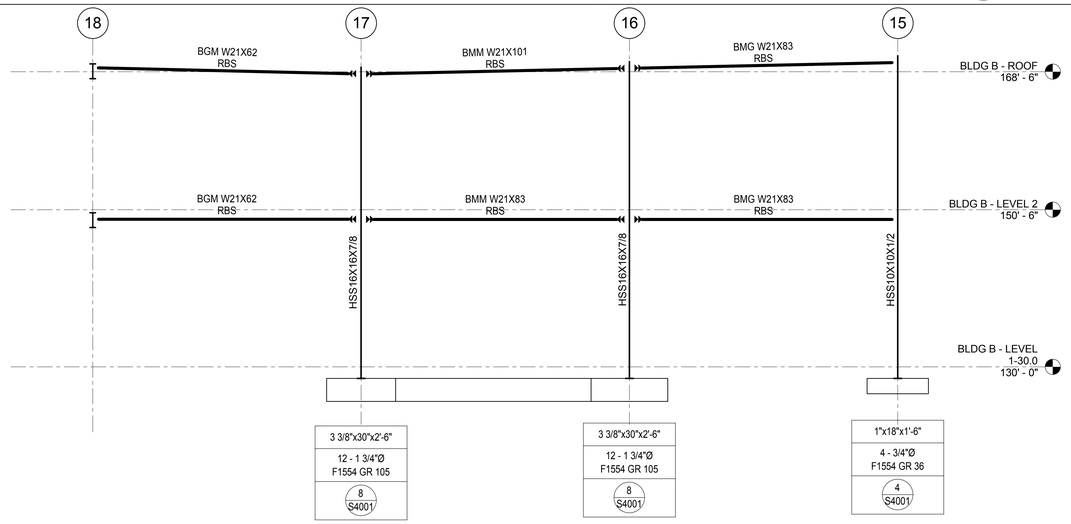

MOMENT FRAME ELEVATION - LINE Q (W)

1/8" = 1'-0"

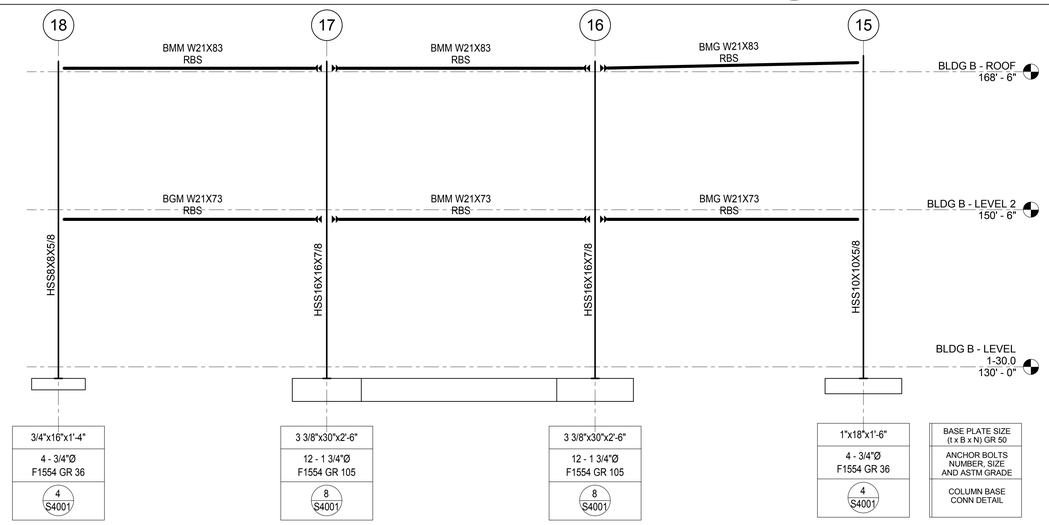

MOMENT FRAME ELEVATION - LINE P (V)

1/8" = 1'-0"

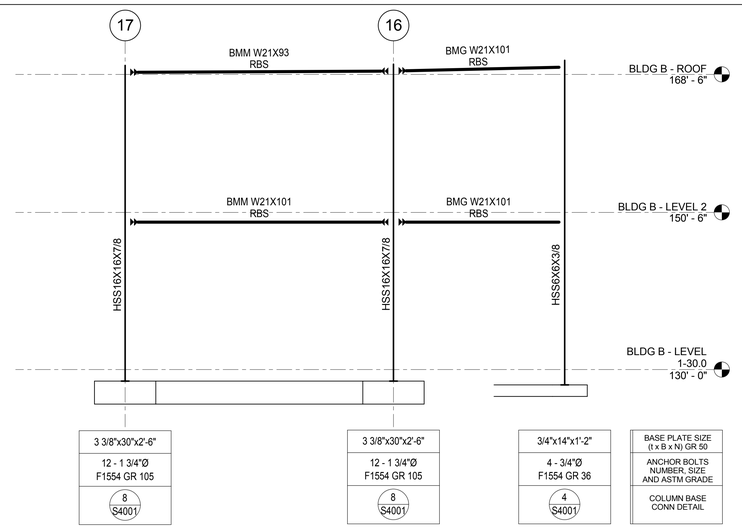

MOMENT FRAME ELEVATION - LINE S (X)

1/8" = 1'-0"

CLIENT

CENTERCAL PROPERTIES, LLC

COPYRIGHT:

Any reproduction or distribution for any purpose other than authorized by IBI Group is forbidden. Written dimensions shall have precedence over scaled dimensions. Contractors shall verify and be responsible for all dimensions and conditions on the job, and report any errors or omissions to the Consultant then the dimensions and conditions shown on the drawing. Shop drawings shall be submitted to IBI Group for approval before proceeding with fabrication.

COPYRIGHT © 2016 IBI GROUP

ISSUES

NO.	ISSUANCE	STATUS	DATE

SEAL

EXPIRES

SUB CONSULTANT

MARTIN & associates

JOHN A. MARTIN & ASSOCIATES
Structural Engineers
950 S. Grand Avenue
Los Angeles, Calif. 90015
Phone (213) 483-6490
Fax (213) 483-3084
J14261

PRIME CONSULTANT

IBI

IBI GROUP
18401 Von Karman Avenue, Suite 110
Irvine, CA 92612 United States
tel +1 949 833 5588 ext 146 fax +1 949 833 5511
ibigroup.com

PROJECT

The Village at Totem Lake - Building B
Kirkland, Washington

PROJECT NO:	J14261
DRAWN BY:	Author
CHKD BY:	Checker
SCALE:	1/8" = 1'-0"
DATE:	05/25/16

SHEET TITLE

MOMENT FRAME ELEVATIONS

BLDG	SHEET NUMBER	ISSUE
B	S3005	

5/26/2016 12:54:34 PM C:\Users\bkirsch\Documents\ATV_Totem_Bldg\B_S_2016_bkirsch.rvt

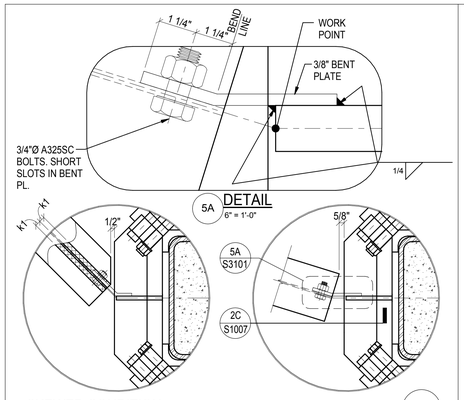

SKEWED CONDITION 5

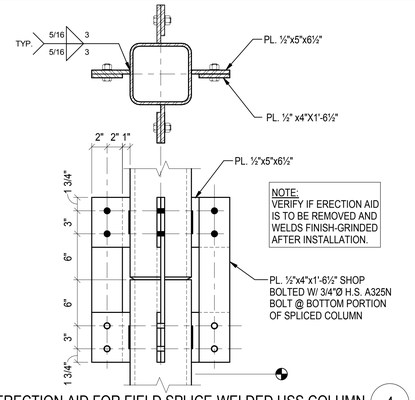

ERECTION AID FOR FIELD SPLICE-WELDED HSS COLUMN 4

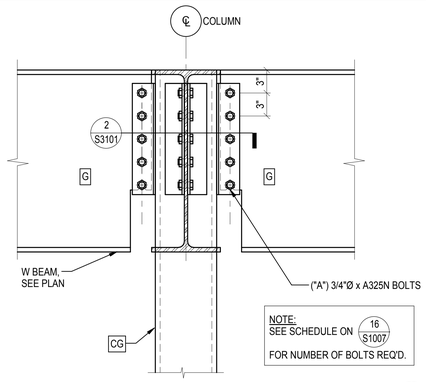

BEAM TO GRAVITY COLUMN DETAIL 3

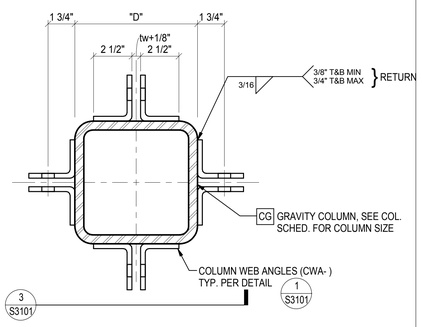

NOTE: SEE PLAN FOR ACTUAL NUMBER OF CONNECTIONS (FOUR SHOWN)

XL400 GRAVITY COLUMN ANGLE "CWA-" 2

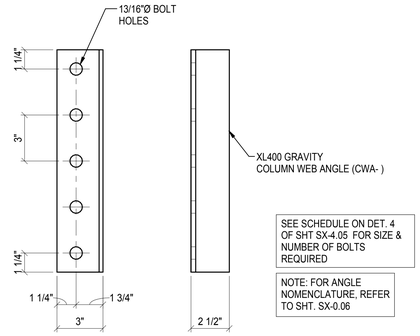

GRAVITY COLUMN WEB ANGLE 1

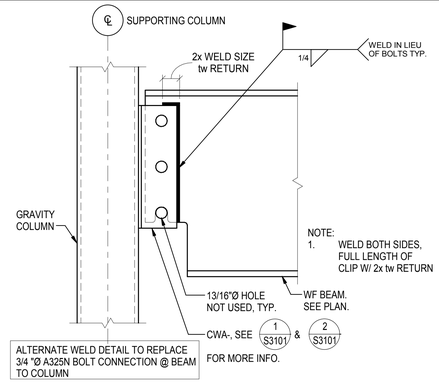

WELDED BEAM TO GRAVITY COLUMN CONNECTION 7

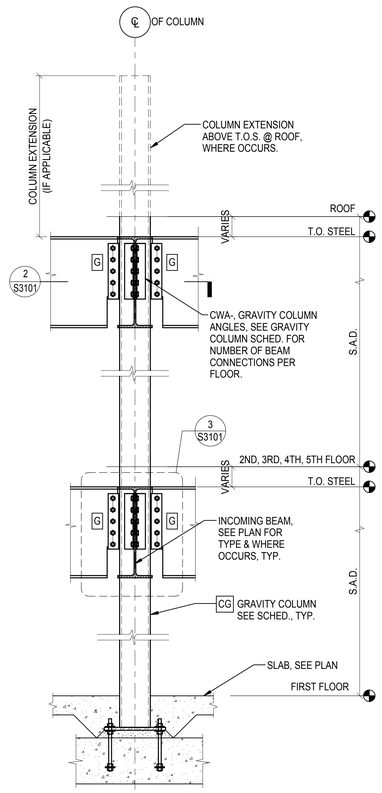

CG GRAVITY COLUMN ELEVATION - HSS6x6 OR HSS8x8 11

CLIENT

CENTERCAL PROPERTIES, LLC

COPYRIGHT:

Any reproduction or distribution for any purpose other than authorized by IBI Group is forbidden. Written dimensions shall have precedence over scaled dimensions. Contractors shall verify and be responsible for all dimensions and conditions on the job, and report any errors or omissions to the consultant then the dimensions and conditions shown on the drawing. Shop drawings shall be submitted to IBI Group for approval before proceeding with fabrication.

COPYRIGHT © 2016 IBI GROUP

ISSUES

NO.	ISSUANCE	STATUS	DATE

SEAL

EXPIRES

SUB CONSULTANT

MARTIN & associates
JOHN A. MARTIN & ASSOCIATES
Structural Engineers
950 S. Grand Avenue
Los Angeles, Calif. 90015
Phone (213) 483-6490
Fax (213) 483-3084
J14261

PRIME CONSULTANT

IBI
IBI GROUP
18401 Von Karman Avenue, Suite 110
Irvine, CA 92612 United States
tel +1 949 833 5588 ext 146 fax +1 949 833 5511
ibigroup.com

PROJECT

The Village at Totem Lake - Building B
Kirkland, Washington

PROJECT NO:	J14261
DRAWN BY:	Author
CHKD BY:	Checker
SCALE:	As indicated
DATE:	05/25/16

SHEET TITLE

NON-FRAME COLUMN SECTIONS AND ELEVATIONS

BLDG	SHEET NUMBER	ISSUE
B	S3101	

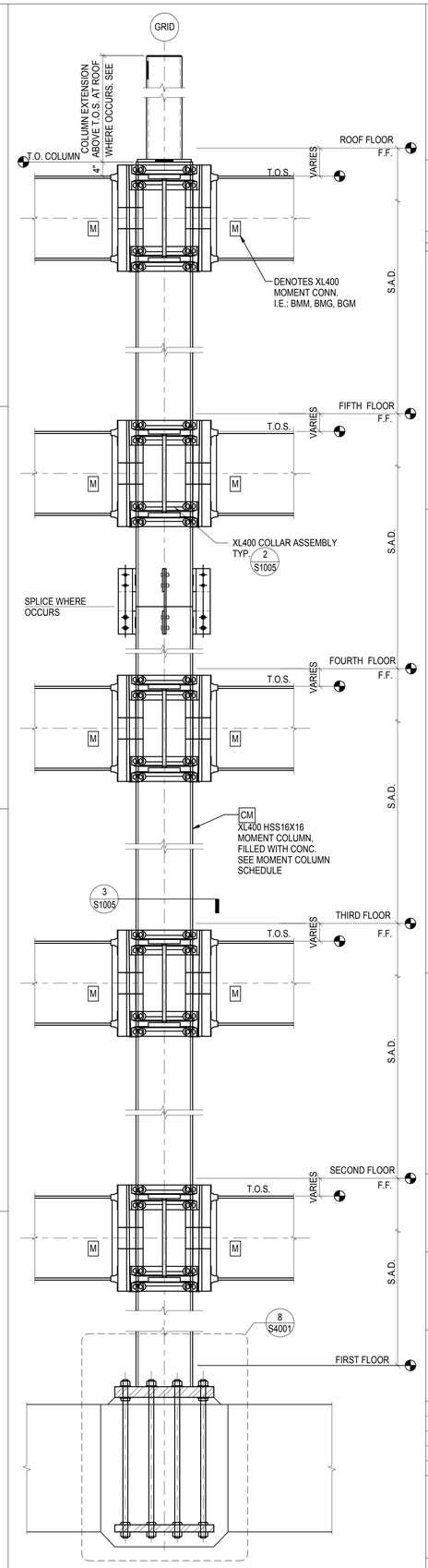

CM MOMENT COLUMN ELEVATION

16

CLIENT

CENTERCAL PROPERTIES, LLC

COPYRIGHT:

Any reproduction or distribution for any purpose other than authorized by IBI Group is forbidden. Written dimensions shall have precedence over scaled dimensions. Contractors shall verify and be responsible for all dimensions and conditions on the job, and report any errors or omissions to the Consultant then the dimensions and conditions shown on the drawing. Shop drawings shall be submitted to IBI Group for approval before proceeding with fabrication.

COPYRIGHT © 2016 IBI GROUP

ISSUES

NO.	ISSUANCE	STATUS	DATE

SEAL

EXPIRES

SUB CONSULTANT

MARTIN & associates

JOHN A. MARTIN & ASSOCIATES
Structural Engineers
950 S. Grand Avenue
Los Angeles, Calif. 90015
Phone (213) 483-6490
Fax (213) 483-3084
J14261

PRIME CONSULTANT

IBI

IBI GROUP
18401 Von Karman Avenue, Suite 110
Irvine, CA 92612 United States
tel +1 949 833 5588 ext 146 fax +1 949 833 5511
ibigroup.com

PROJECT

The Village at Totem Lake - Building B
Kirkland, Washington

PROJECT NO:	J14261
DRAWN BY:	Author
CHKD BY:	Checker
SCALE:	3/4" = 1'-0"
DATE:	05/25/16

SHEET TITLE

MOMENT FRAME SECTIONS AND ELEVATIONS

BLDG	SHEET NUMBER	ISSUE
B	S3102	

5/26/2016 12:54:37 PM C:\Users\bkelson\Documents\ATW_Totem_Bldg\B_S_2016_bkelson.rvt

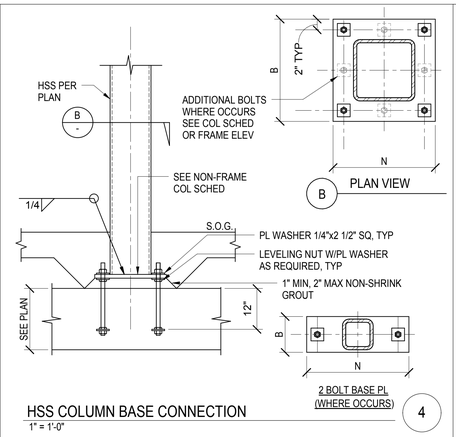

HSS COLUMN BASE CONNECTION
1" = 1'-0"
4

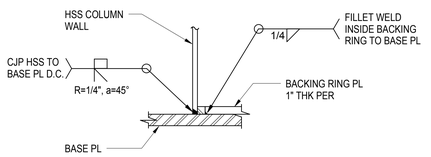

8A DETAIL
1 1/2" = 1'-0"

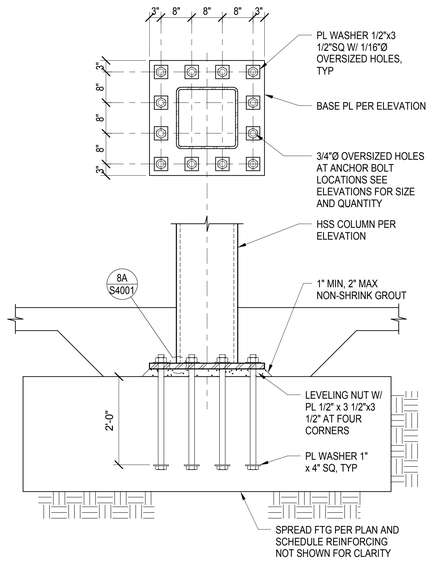

BASE PL DETAIL FOR MOMENT FRAME COLUMN
8

TYPE	FOOTING SIZE		REINFORCING EA WAY BOT UNO	REINFORCING * EA WAY TOP UNO	REMARKS
	W x L	"T"			
F3	3'-0" SQ.	18"	4-#5 EW	-	
F4	4'-0" SQ.	18"	5-#5 EW	-	
F5	5'-0" SQ.	18"	5-#6 EW	-	
F6	6'-0" SQ.	18"	6-#6 EW	-	
F6A	6'-0" SQ.	36"	6-#8 EW	-	
F7	7'-0" SQ.	18"	7-#7 EW	-	
F7A	7'-0" SQ.	36"	7-#8 EW	-	
F8	8'-0" SQ.	24"	8-#7 EW	-	
F8A	8'-0" SQ.	36"	8-#8 EW	-	
F9	9'-0" SQ.	24"	8-#8 EW	-	
F9A	9'-0" SQ.	36"	9-#8 EW	-	
F10	10'-0" SQ.	24"	11-#8 EW	-	
F10A	10'-0" SQ.	36"	11-#8 EW	-	
F11	11'-0" SQ.	24"	12-#8 EW	-	

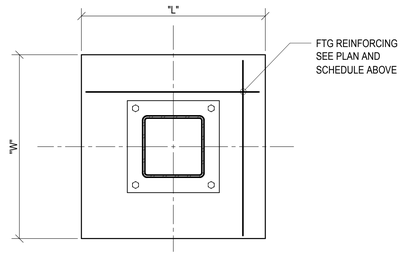

PLAN

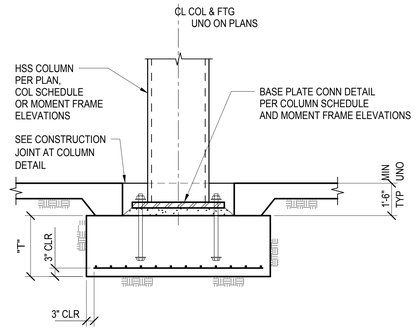

ELEVATION AT STEEL COLUMN
A

NOTES:

1. SEE FOUNDATION PLANS AND SCHEDULE THIS SHEET FOR SPREAD FOOTING TYPES AND LOCATIONS
2. SEE COLUMN SCHEDULE FOR BASE PLATE AND ANCHOR BOLT SIZES
3. * SEE DET 8 & 12 ON S4002 FOR ADDITIONAL REINFORCING AT BRACED FRAME AND MOMENT FRAME FOOTINGS

COLUMN FOOTING DETAIL
3/4" = 1'-0"
6

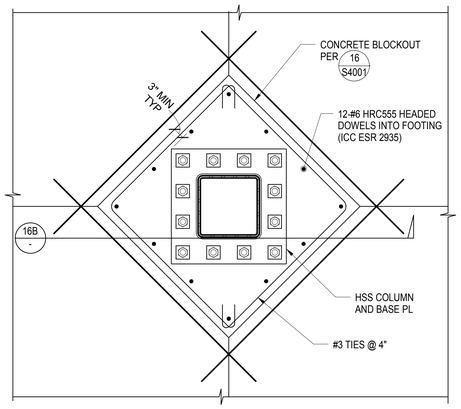

16A PLAN

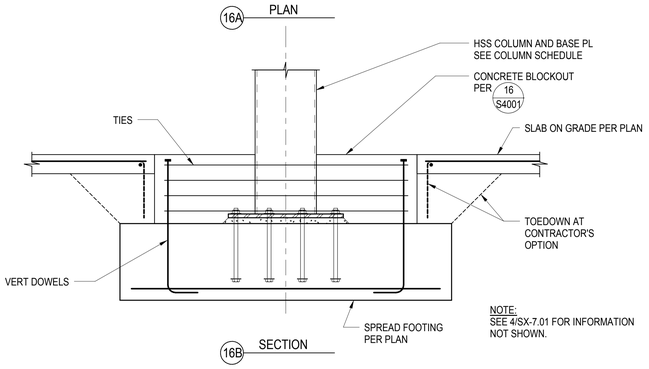

NOTE:
SEE 4/SX-7.01 FOR INFORMATION NOT SHOWN.

16B SECTION

TYPICAL MOMENT FRAME COLUMN BLOCKOUT AT SLAB ON GRADE
3/4" = 1'-0"
14

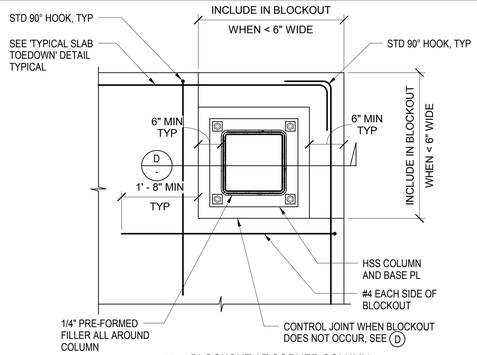

A BLOCKOUT AT CORNER COLUMN

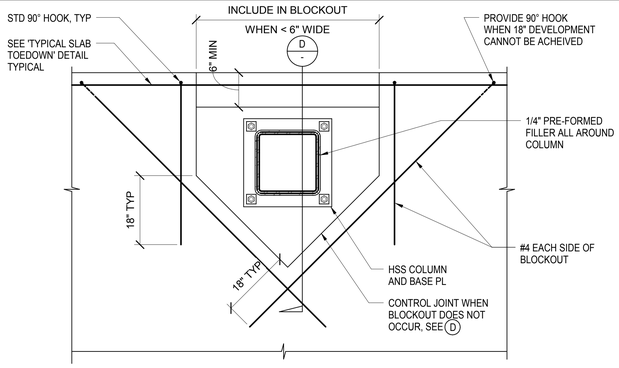

B BLOCKOUT AT EDGE COLUMN

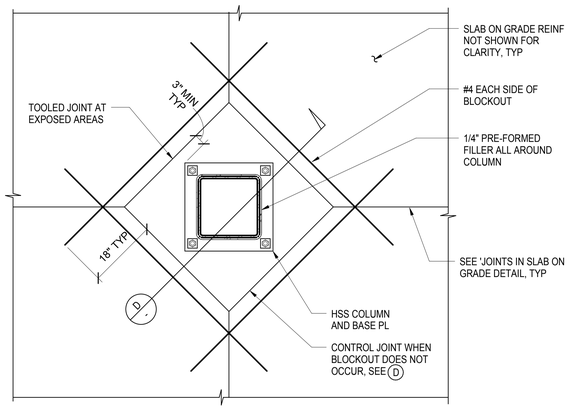

C BLOCKOUT AT INTERIOR COLUMN

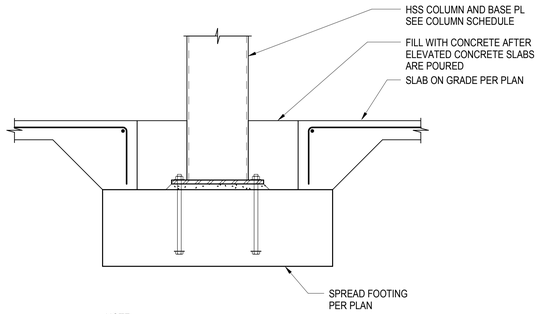

NOTE:
COLUMN BLOCKOUT IS NOT REQUIRED IF SLAB ON GRADE IS POURED AFTER ELEVATED CONCRETE SLABS ARE POURED.

D TYPICAL SECTION

TYPICAL COLUMN BLOCKOUT AT SLAB ON GRADE
3/4" = 1'-0"
16

CLIENT

CENTERCAL PROPERTIES, LLC

COPYRIGHT:

Any reproduction or distribution for any purpose other than authorized by IBI Group is forbidden. Written dimensions shall have precedence over scaled dimensions. Contractors shall verify and be responsible for all dimensions and conditions on site. IBI Group shall be notified of any variations from the dimensions and conditions shown on the drawing. Shop drawings shall be submitted to IBI Group for approval before proceeding with fabrication.

COPYRIGHT © 2016 IBI GROUP

ISSUES

NO.	ISSUANCE	STATUS	DATE
1	STRUCTURAL ADDENDUM 1		05/25/16

SEAL

EXPIRES

SUB CONSULTANT

MARTIN & associates
JOHN A. MARTIN & ASSOCIATES
Structural Engineers
950 S. Grand Avenue
Los Angeles, Calif. 90015
Phone (213) 483-6490
Fax (213) 483-3084
J14261

PRIME CONSULTANT

IBI
IBI GROUP
18401 Von Karman Avenue, Suite 110
Irvine, CA 92612 United States
tel +1 949 833 5588 ext 146 fax +1 949 833 5511
ibigroup.com

PROJECT

The Village at Totem Lake - Building B
Kirkland, Washington

PROJECT NO:	J14261
DRAWN BY:	Author
CHKD BY:	Checker
SCALE:	As indicated
DATE:	05/25/16

SHEET TITLE

FOUNDATION SECTIONS AND DETAILS

BLDG	SHEET NUMBER	ISSUE
B	S4001	

C:\Users\bkeser\Documents\ATV_Totem_Bldg B_S_2016_bkeser.rvt

5/26/2016 12:54:38 PM

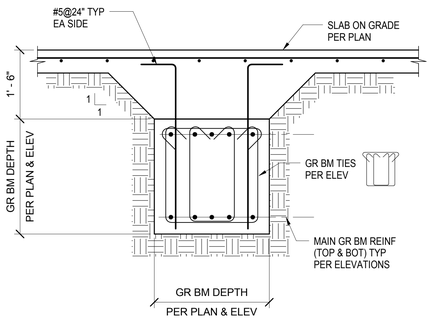

GRADE BEAM SECTION 5

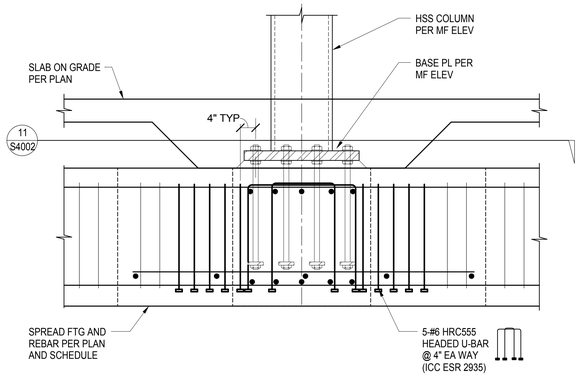

REINFORCING AT MOMENT FRAME BASE PLATE 3

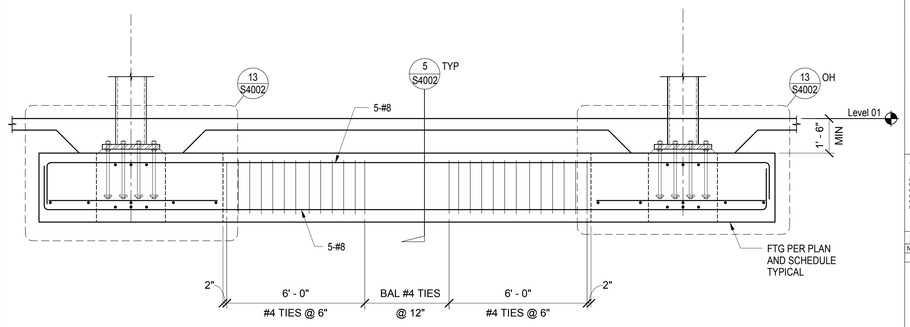

GRADE BEAM SIZE 36"x36"

GRADE BEAM ELEVATION GB-1 1

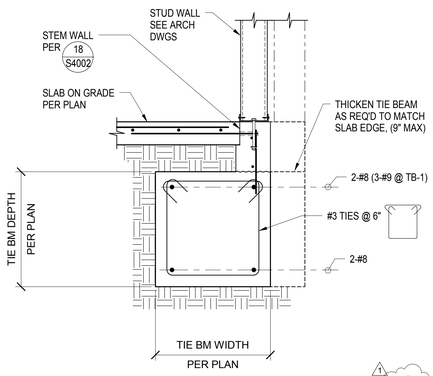

TIE BEAM SECTION 10
3/4" = 1'-0"

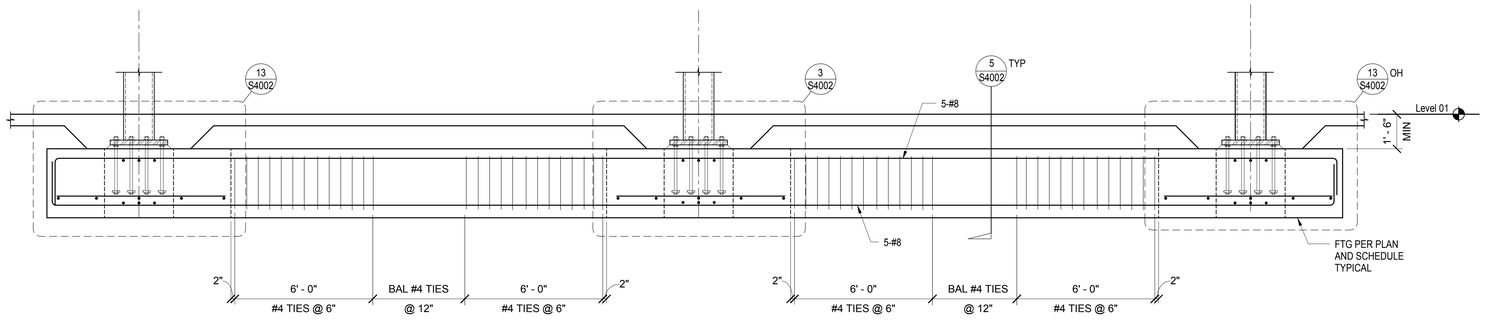

GRADE BEAM SIZE 36"x36"

GRADE BEAM ELEVATION GB-2 6

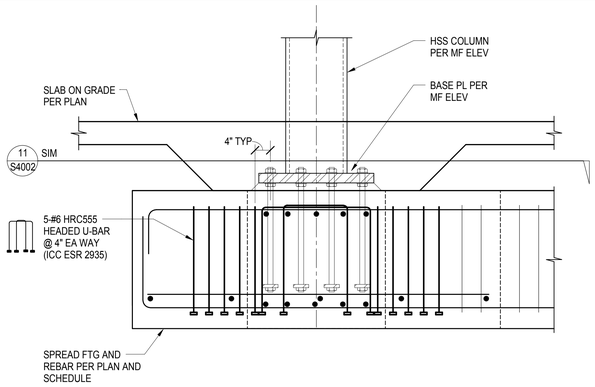

REINFORCING AT MOMENT FRAME BASE PLATE 13

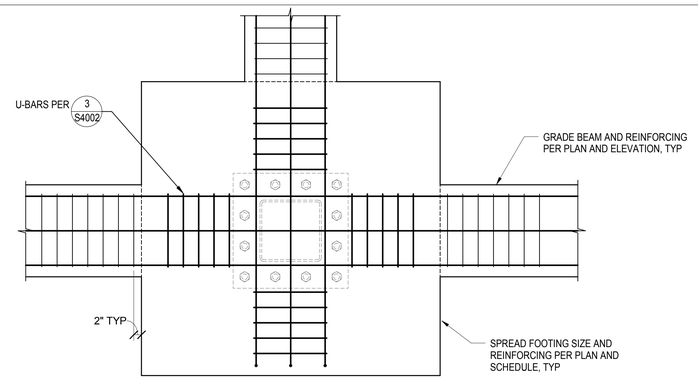

PLAN-DETAIL 11

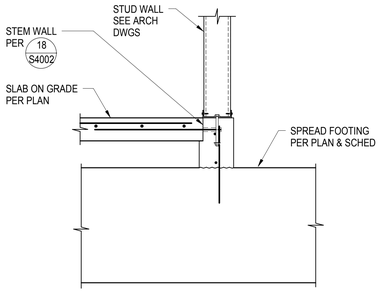

SLAB EDGE @ SPREAD FOOTING 19
3/4" = 1'-0"

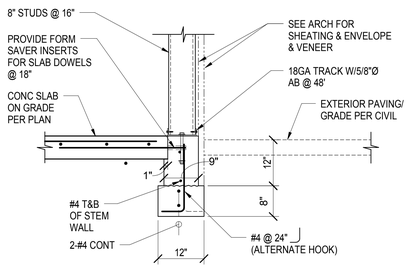

TYP EXT STUD SUPPORT (SLAB EDGE FOOTING) 18
3/4" = 1'-0"

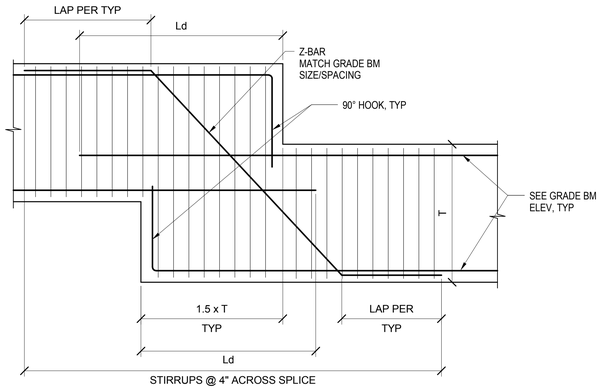

GRADE BEAM STEP DETAIL 16
3/4" = 1'-0"

CLIENT

CENTERCAL PROPERTIES, LLC

COPYRIGHT:

Any reproduction or distribution for any purpose other than authorized by IBI Group is forbidden. Written dimensions shall have precedence over scaled dimensions. Contractors shall verify and be responsible for all dimensions and conditions on the job, and report any errors or omissions to the architect then the dimensions and conditions shown on the drawing. Shop drawings shall be submitted to IBI Group for approval before proceeding with fabrication.

COPYRIGHT © 2016 IBI GROUP

ISSUES

NO.	ISSUANCE	STATUS	DATE
1	STRUCTURAL ADDENDUM 1		05/25/16

SEAL

EXPIRES

SUB CONSULTANT

MARTIN & associates
JOHN A. MARTIN & ASSOCIATES
Structural Engineers
950 S. Grand Avenue
Los Angeles, Calif. 90015
Phone (213) 483-6490
Fax (213) 483-3084
J14261

PRIME CONSULTANT

IBI
IBI GROUP
18401 Von Karman Avenue, Suite 110
Irvine, CA 92612 United States
tel +1 949 833 5588 ext 146 fax +1 949 833 5511
ibigroup.com

PROJECT

The Village at Totem Lake - Building B
Kirkland, Washington

PROJECT NO:	J14261
DRAWN BY:	Author
CHKD BY:	Checker
SCALE:	As indicated
DATE:	05/25/16

SHEET TITLE

GRADE BEAM SECTIONS AND ELEVATIONS

BLDG	SHEET NUMBER	ISSUE
B	S4002	

5/26/2016 12:54:39 PM C:\Users\bkirton\Documents\KTW_Totem_Bldg B_S_2016_bkirton.rvt

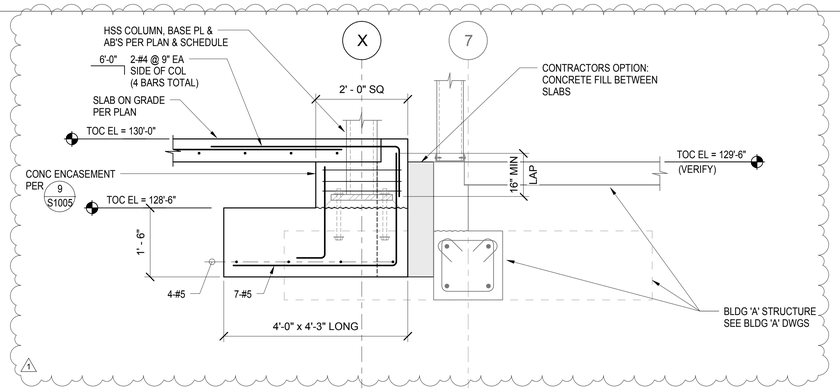

SECTION 4
3/4" = 1'-0"

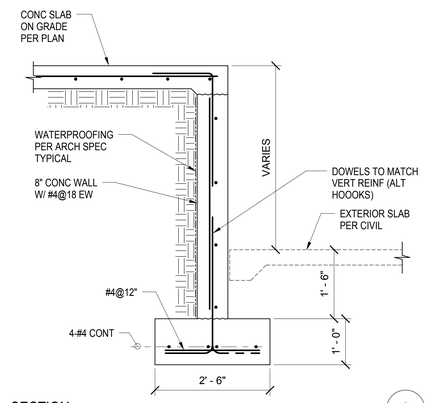

SECTION 3
3/4" = 1'-0"

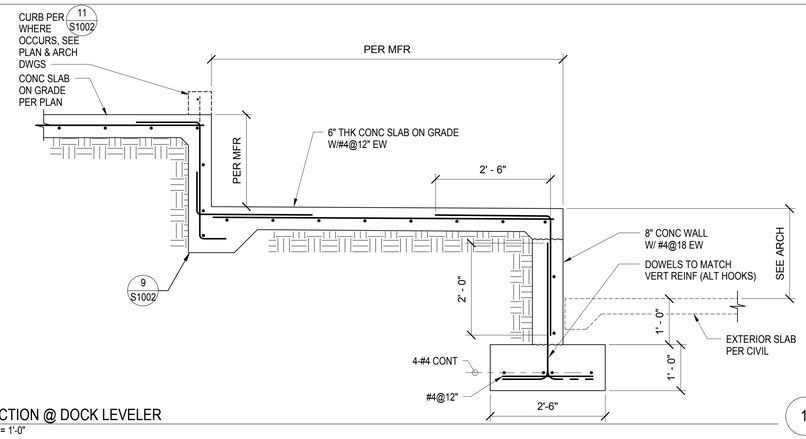

SECTION @ DOCK LEVELER 1
3/4" = 1'-0"

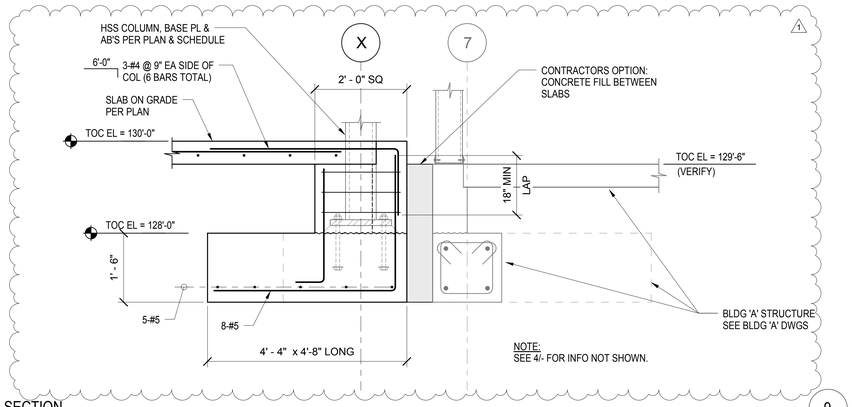

SECTION 9
3/4" = 1'-0"

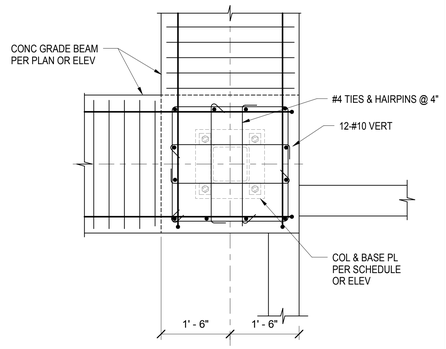

PILASTER SECTION 8
3/4" = 1'-0"

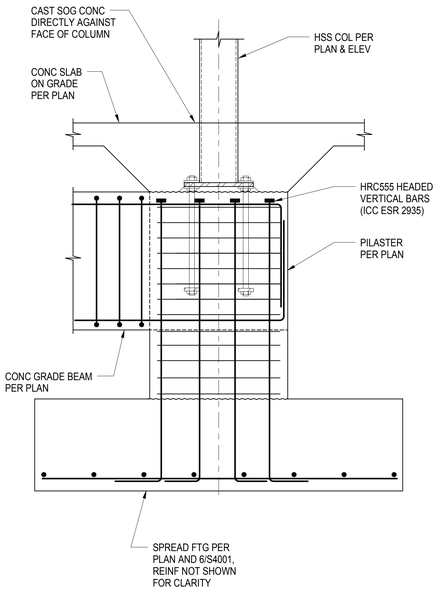

TYPICAL PILASTER DETAIL @ INTERIOR 12
3/4" = 1'-0"

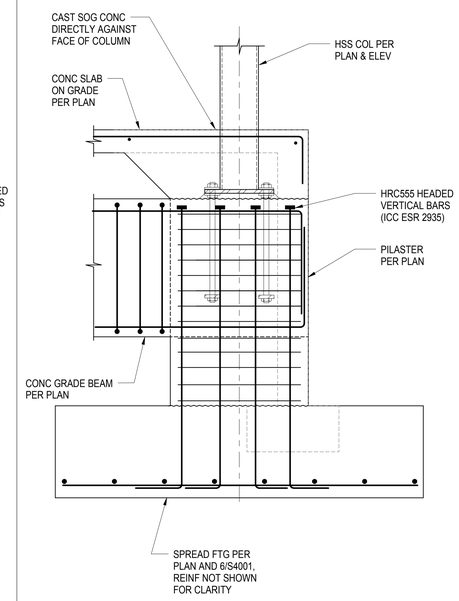

TYPICAL PILASTER DETAIL @ SLAB EDGE 11
3/4" = 1'-0"

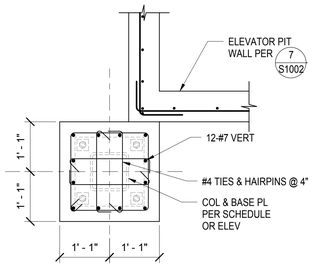

PILASTER SECTION 15
3/4" = 1'-0"

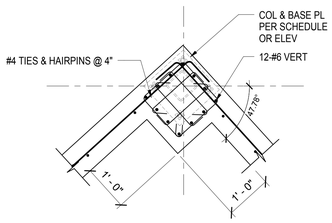

PILASTER SECTION 14
3/4" = 1'-0"

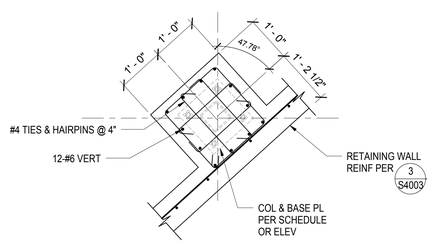

PILASTER SECTION 13
3/4" = 1'-0"

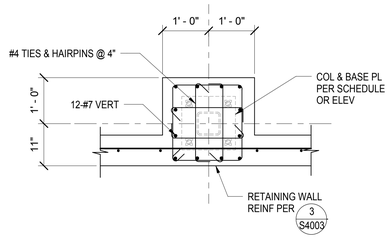

PILASTER SECTION 19
3/4" = 1'-0"

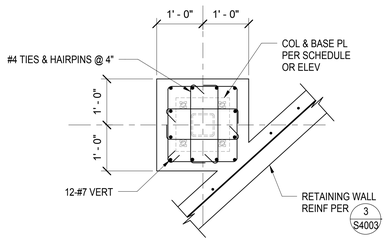

PILASTER SECTION 18
3/4" = 1'-0"

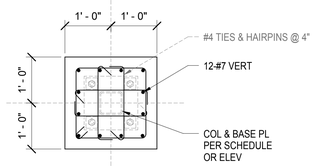

PILASTER SECTION 17
3/4" = 1'-0"

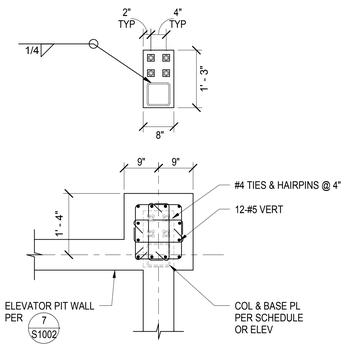

PILASTER SECTION 16
3/4" = 1'-0"

CLIENT

CENTERCAL PROPERTIES, LLC

COPYRIGHT:

Any reproduction or distribution for any purpose other than authorized by IBI Group is forbidden. Written dimensions shall have precedence over scaled dimensions. Contractors shall verify and be responsible for all dimensions and conditions on the job, and report any errors, omissions or conflicts to IBI Group before proceeding with the work. Do not scale drawings. Report any discrepancies between the dimensions and conditions shown on the drawing. Shop drawings shall be submitted to IBI Group for approval before proceeding with fabrication.

COPYRIGHT © 2016 IBI GROUP

ISSUES

NO.	ISSUANCE	STATUS	DATE
1	STRUCTURAL ADDENDUM 1		05/25/16

SEAL

BARRY SCHRAER STATE OF WASHINGTON 21669 REGISTERED PROFESSIONAL ENGINEER

EXPIRES

SUB CONSULTANT

MARTIN & associates
JOHN A. MARTIN & ASSOCIATES
Structural Engineers
950 S. Grand Avenue
Los Angeles, Calif. 90015
Phone (213) 483-6490
Fax (213) 483-3084
J14261

PRIME CONSULTANT

IBI
IBI GROUP
18401 Von Karman Avenue, Suite 110
Irvine, CA 92612 United States
tel +1 949 833 5588 ext 146 fax +1 949 833 5511
ibigroup.com

PROJECT

The Village at Totem Lake - Building B
Kirkland, Washington

PROJECT NO:	J14261
DRAWN BY:	Author
CHKD BY:	Checker
SCALE:	3/4" = 1'-0"
DATE:	05/25/16

SHEET TITLE

FOUNDATION SECTIONS AND DETAILS

BLDG	SHEET NUMBER	ISSUE
B	S4003	

5/20/2016 12:54:44 PM C:\Users\jackson\Documents\ATW_Totem_Bldg B_S_2016_jackson.rvt

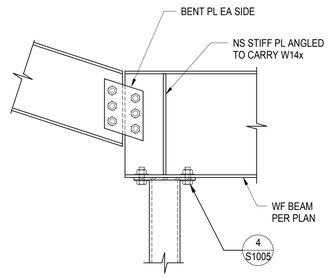

SECTION 2
1" = 1'-0"

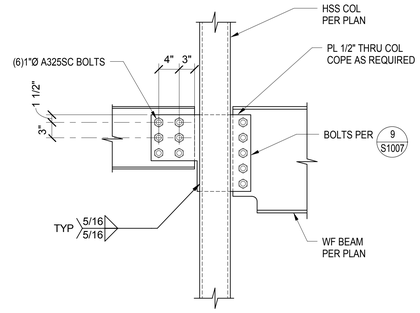

SECTION 1
1" = 1'-0"

CLIENT

CENTERCAL PROPERTIES, LLC

COPYRIGHT:

Any reproduction or distribution for any purpose other than authorized by IBI Group is forbidden. Written dimensions shall have precedence over scaled dimensions. Contractors shall verify and be responsible for all dimensions and conditions on the job, and report any errors or omissions to the architect then the dimensions and conditions shown on the drawing. Shop drawings shall be submitted to IBI Group for approval before proceeding with fabrication.

COPYRIGHT © 2016 IBI GROUP

ISSUES

NO.	ISSUANCE	STATUS	DATE
1	STRUCTURAL ADDENDUM 1		05/25/16

SEAL

EXPIRES

SUB CONSULTANT

MARTIN & associates
JOHN A. MARTIN & ASSOCIATES
Structural Engineers
950 S. Grand Avenue
Los Angeles, Calif. 90015
Phone (213) 483-6490
Fax (213) 483-3084
J14261

PRIME CONSULTANT

IBI
IBI GROUP
18401 Von Karman Avenue, Suite 110
Irvine, CA 92612 United States
tel +1 949 833 5588 ext 146 fax +1 949 833 5511
ibigroup.com

PROJECT

The Village at Totem Lake - Building B
Kirkland, Washington

PROJECT NO:	J14261
DRAWN BY:	Author
CHKD BY:	Checker
SCALE:	1" = 1'-0"
DATE:	05/25/16

SHEET TITLE

STEEL DETAILS

BLDG	SHEET NUMBER	ISSUE
B	S5001	1

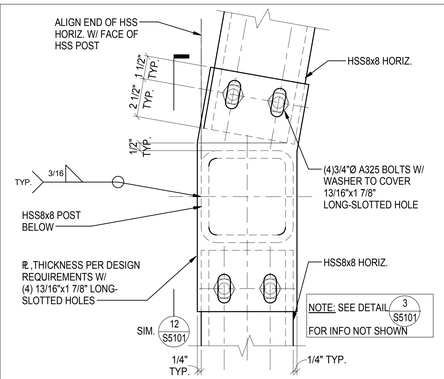

ROOF SCREEN TOP PLATE SKEWED CONDITION - PLAN DETAIL (4)
NTS

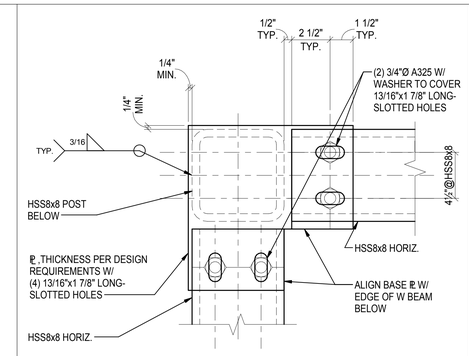

ROOF SCREEN TOP PLATE CORNER CONDITION - PLAN DETAIL (3)
NTS

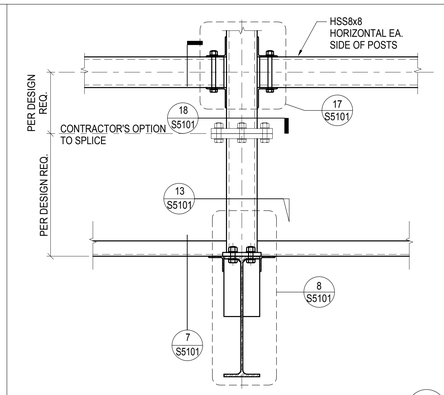

ROOF SCREEN - SECTION (2)
NTS

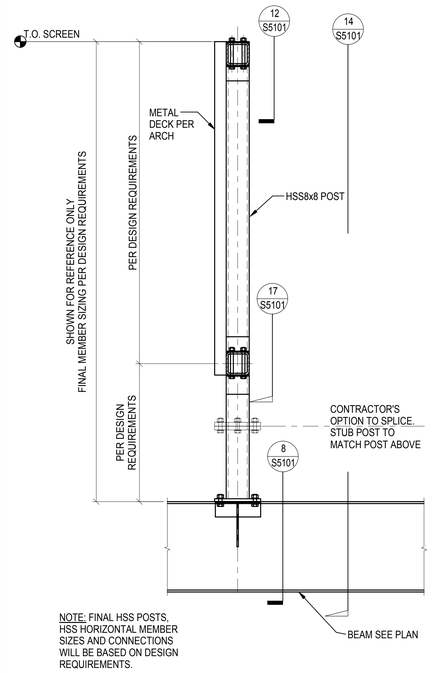

ROOF SCREEN-BASE DESIGN (6)
NTS

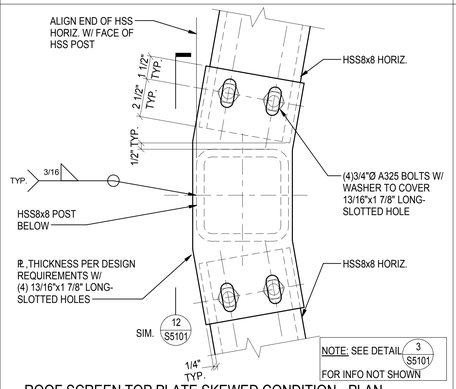

ROOF SCREEN TOP PLATE SKEWED CONDITION - PLAN DETAIL (9)
NTS

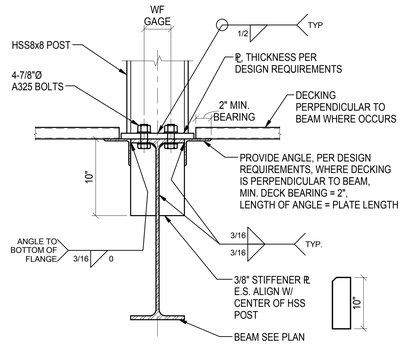

ROOF SCREEN POST - W BEAM CONNECTION (8)
NTS

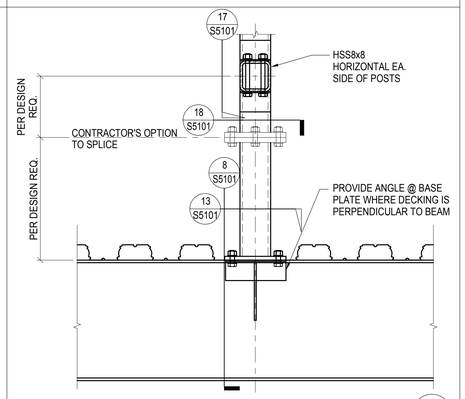

ROOF SCREEN - SECTION (7)
NTS

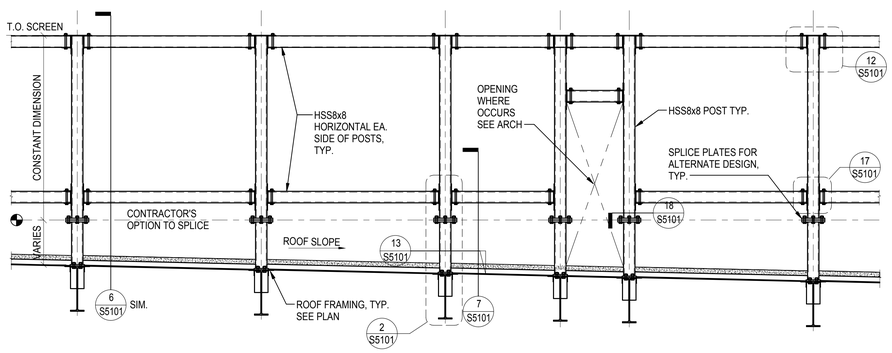

ROOF SCREEN-PARTIAL ELEVATION (ALTERNATE DESIGN SHOWN) (14)
NTS

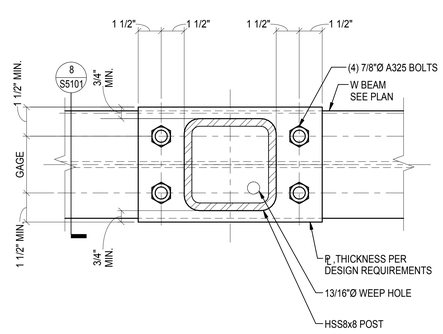

ROOF SCREEN BASE PLATE DETAIL (13)
NTS

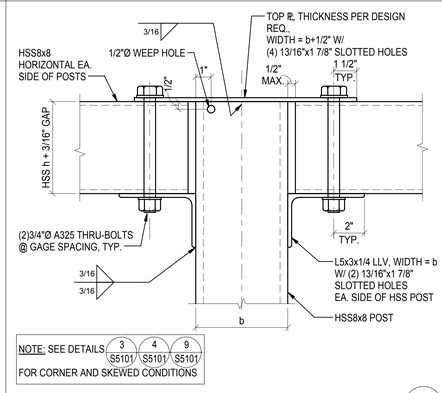

TOP OF ROOF SCREEN DETAIL (12)
NTS

ROOF SCREEN POST - W BEAM CONNECTION (11)
NTS

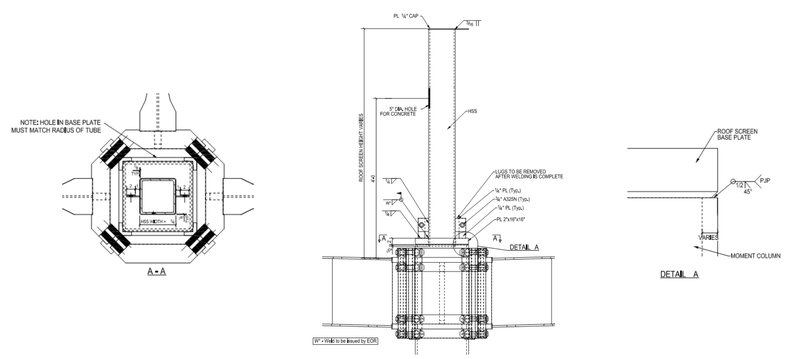

POST CONNECTION TO CONXL MOMENT COLUMN AT ROOF (19)
NTS

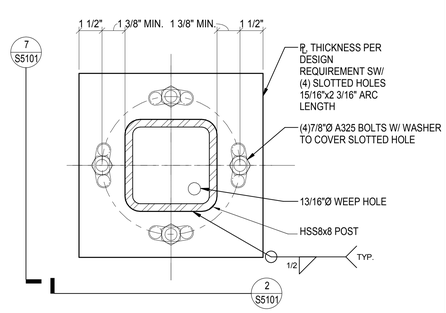

ROOF SCREEN HSS POST SPLICE PLATE DET.- ALTERNATE DESIGN (18)
NTS

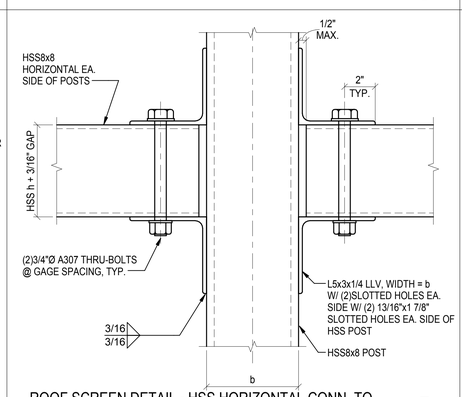

ROOF SCREEN DETAIL - HSS HORIZONTAL CONN. TO POST (17)
NTS

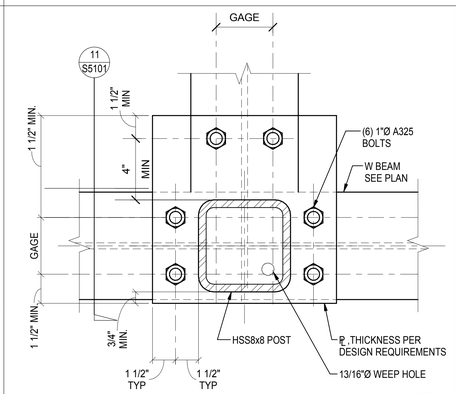

ROOF SCREEN BASE PLATE DETAIL (16)
NTS

CLIENT

CENTERCAL PROPERTIES, LLC

COPYRIGHT:

Any reproduction or distribution for any purpose other than authorized by IBI Group is forbidden. Written dimensions shall have precedence over scaled dimensions. Contractors shall verify and be responsible for all dimensions and conditions on site. Any errors or omissions shall be reported to IBI Group then the dimensions and conditions shown on the drawing. Shop drawings shall be submitted to IBI Group for approval before proceeding with fabrication.

COPYRIGHT © 2016 IBI GROUP

ISSUES

NO.	ISSUANCE	STATUS	DATE
1	STRUCTURAL ADDENDUM 1		05/25/16

SEAL

EXPIRES

SUB CONSULTANT

MARTIN & associates

JOHN A. MARTIN & ASSOCIATES
Structural Engineers
950 S. Grand Avenue
Los Angeles, Calif. 90015
Phone (213) 483-6490
Fax (213) 483-3084
J14261

PRIME CONSULTANT

IBI

IBI GROUP
16401 Von Karman Avenue, Suite 110
Irvine, CA 92612 United States
tel +1 949 833 5588 ext 146 fax +1 949 833 5511
ibigroup.com

PROJECT

The Village at Totem Lake - Building B
Kirkland, Washington

PROJECT NO:	J14261
DRAWN BY:	Author
CHKD BY:	Checker
SCALE:	As indicated
DATE:	05/25/16

SHEET TITLE

ROOF SCREEN ELEVATIONS & DETAILS

BLDG	SHEET NUMBER	ISSUE
B	S5101	1

5/26/2016 12:54:44 PM C:\Users\jkelson\Documents\ATW_Totem_B\bjB_S_2016_jkelson.rvt

ENERGY RECOVERY VENTILATOR SCHEDULE

TAG	MANUFACTURER AND MODEL	SUPPLY FAN DATA			RETURN FAN DATA			60 HERTZ ELECTRICAL DATA				SOUND PRESSURE (DBA)	WEIGHT (LBS)	NOTES
		SA (CFM)	ESP (IN WG)	MIN HP	RA (CFM)	ESP (IN WG)	MIN HP	VOLTS	PHASE	MCA	MOCP			
ERV–1	LOSSNAY LGH–F300RX5–E	300	0.60	0.52	300	0.60	0.52	208	1	1.8	15	34	75	1, 2, 3, 4
ERV–2	LOSSNAY LGH–F300RX5–E	300	0.60	0.52	300	0.60	0.52	208	1	1.8	15	34	75	1, 2, 3, 4
ERV–3	LOSSNAY LGH–F300RX5–E	300	0.60	0.52	300	0.60	0.52	208	1	1.8	15	34	75	1, 2, 3, 4

NOTES:
1. EQUIPMENT MAY BE SUBSTITUTED FOR EQUAL OR BETTER MANUFACTURER.
2. REFER TO ELECTRICAL DRAWINGS FOR MOTOR STARTER AND/OR DISCONNECT.
3. PROVIDE WITH BACK DRAFT DAMPER AT BUILDING ENVELOPE PENETRATION AS ALLOWED BY 2012 WSEC SECTION C403.2.4.4, EXCEPTION (4) FOR SYSTEMS THAT OPERATE CONTINUOUSLY.
4. PROVIDE WITH AT LEAST 70% EFFICIENT OR ELECTRONICALLY COMMUTATED MOTOR AS REQUIRED BY 2012 WSEC SECTION C403.2.10.3 FOR FRACTIONAL HORSEPOWER FAN MOTORS THAT ARE 1/12 HORSEPOWER AND LARGER.

ELECTRIC WALL HEATER SCHEDULE

TAG	MANUFACTURER AND MODEL	APPLICATION	SIZE (IN) W x HT	CAPACITY (BTU/HR)	CAPACITY (WATTS)	60 HERTZ ELECTRICAL DATA				MOUNTING	WEIGHT (LBS)	NOTES
						VOLTS	PHASE	FLA	MOCP			
EWH–1	QMARK GFR2004	RISER ROOM	17x8	6,826	2000	208	1	8.3	15	SURFACE	15	1, 2, 3
EWH–2	QMARK GFR2004	ELECTRIC ROOM	17x8	6,826	2000	208	1	8.3	15	SURFACE	15	1, 2, 3
EWH–3	QMARK GFR2004	TRASH ROOM	17x8	6,826	2000	208	1	8.3	15	SURFACE	15	1, 2, 3
EWH–4	QMARK GFR2004	DOCK MANAGER OFFICE	17x8	6,826	2000	208	1	8.3	15	SURFACE	15	1, 2, 3
EWH–5	QMARK GFR2004	B200 EXIT STAIR	17x8	6,826	2000	208	1	8.3	15	SURFACE	15	1, 2, 3
EWH–6	QMARK GFR2004	HOUSE CORRIDOR	17x8	6,826	2000	208	1	8.3	15	SURFACE	15	1, 2, 3
EWH–7	QMARK GFR2004	B220 EXIT STAIR	17x8	6,826	2000	208	1	8.3	15	SURFACE	15	1, 2, 3
EWH–8	QMARK GFR2004	B260 EXIT STAIR	17x8	6,826	2000	208	1	8.3	15	SURFACE	15	1, 2, 3
EWH–9	QMARK GFR2004	HOUSE CORRIDOR	17x8	6,826	2000	208	1	8.3	15	SURFACE	15	1, 2, 3
EWH–10	QMARK GFR2004	B260 EXIT STAIR	17x8	6,826	2000	208	1	8.3	15	SURFACE	15	1, 2, 3
EWH–11	QMARK GFR2004	HOUSE CORRIDOR	17x8	6,826	2000	208	1	8.3	15	SURFACE	15	1, 2, 3

NOTES:
1. EQUIPMENT MAY BE SUBSTITUTED FOR EQUAL OR BETTER MANUFACTURER. REFER TO EQUIPMENT SUBMITTALS FOR FINAL SELECTIONS.
2. REFER TO ELECTRICAL DRAWINGS FOR DISCONNECT.
3. PROVIDED WITH INTEGRAL MANUAL CONTROL.

PIPING – LEGEND

- DIRECTION OF FLOW
- SUPPLY OR RETURN ELBOW SECTION UP
- SUPPLY OR RETURN ELBOW SECTION DOWN
- SUPPLY OR RETURN TEE SECTION UP
- SUPPLY OR RETURN TEE SECTION DN
- EXISTING PIPING

ABBREVIATIONS

ø	DIAMETER
ABV	ABOVE
AD	ACCESS DOOR
AFF	ABOVE FINISHED FLOOR
AHU	AIR HANDLING UNIT
AP	ACCESS PANEL
BF	BELOW FLOOR
BFC	BELOW FINISHED CEILING
BOT	BOTTOM
CD	CEILING DIFFUSER
CFM	CUBIC FEET PER MINUTE
CIP	CAST IN PLACE
CLG	CEILING
CONC	CONCRETE
CONN	CONNECTION
CW	COLD WATER
DB	DRY BULB
DN	DOWN
DWG	DRAWING
EA	EACH
EAT	ENTERING AIR TEMPERATURE
EQUIP	EQUIPMENT
ESP	EXTERNAL STATIC PRESSURE
EWT	ENTERING WATER TEMPERATURE
EXH	EXHAUST
FF	FINISHED FLOOR
FPM	FEET PER MINUTE
FT	FOOT OR FEET
FUT	FUTURE
GAL	GALLON
GALV	GALVANIZED
HP	HORSEPOWER
HT	HEIGHT
HVAC	HEATING, VENTILATION AND AIR–CONDITIONING
HWR	HEATING WATER RETURN
HWRR	HEATING WATER REVERSE RETURN
HWS	HEATING WATER SUPPLY
IBC	INTERNATIONAL BUILDING CODE
ID	INSIDE DIAMETER
IMC	INTERNATIONAL MECHANICAL CODE
IN	INCHES
IN WG	INCHES WATER GAUGE
LAT	LEAVING AIR TEMPERATURE
LBS	POUNDS
LIN FT	LINEAR FOOT OR FEET
LWT	LEAVING WATER TEMPERATURE
MAX	MAXIMUM
MBH	1000 BRITISH THERMAL UNITS PER HOUR
MD	MOTORIZED DAMPER
MIN	MINIMUM
MOCP	MAX OVER CURRENT PROTECTION
MTD	MOUNTED
MUA	MAKE UP AIR
N/A	NOT APPLICABLE
NC	NORMALLY CLOSED
NO	NORMALLY OPEN OR NUMBER
OBD	OPPOSED BLADE DAMPER
OD	OUTSIDE DIAMETER/DIMENSION
OSA	OUTSIDE AIR
PH	PHASE
POC	POINT OF CONNECTION
PRESS	PRESSURE
PSI	POUNDS PER SQUARE INCH
RA	RETURN AIR
RL	REFRIGERANT LIQUID LINE
RPBP	REDUCED PRESSURE BACKFLOW PREVENTER
RPM	REVOLUTIONS PER MINUTE
RS	REFRIGERANT SUCTION LINE
SA	SUPPLY AIR
SOG	SLAB ON GRADE
SL	SOUND LINED
SMACNA	SHEET METAL AND AIR–CONDITIONING CONTRACTOR'S NATIONAL ASSOCIATION
SQ FT	SQUARE FOOT OR FEET
SS	STAINLESS STEEL
TDH	TOTAL DYNAMIC HEAD
TG	TRANSFER GRILLE
TYP	TYPICAL
UNO	UNLESS NOTED OTHERWISE
UPC	UNIFORM PLUMBING CODE
VTR	VENT THROUGH ROOF
W	WATTS OR WIDTH
W/	WITH
W/O	WITHOUT
WB	WET BULB
WG	WATER GAUGE
WSEC	WASHINGTON STATE ENERGY CODE

GENERAL NOTES

1. HVAC SYSTEMS HAVE BEEN DESIGNED PER THE REQUIREMENTS OF THE FOLLOWING CODES:
   - 2012 WASHINGTON STATE ENERGY CODE (WASHINGTON ADMINISTRATIVE CODE (WAC) CHAPTER 51–11C)
   - 2012 INTERNATIONAL BUILDING CODE WITH WASHINGTON STATE AMENDMENTS (WAC CHAPTER 51–50)
   - 2012 INTERNATIONAL MECHANICAL CODE WITH WASHINGTON STATE AMENDMENTS (WAC CHAPTER 51–52)
   - 2012 UNIFORM PLUMBING CODE WITH WASHINGTON STATE AMENDMENTS (WAC CHAPTER 51–56)
   - 2012 INTERNATIONAL FUEL GAS CODE WITH WASHINGTON STATE AMENDMENTS (WAC CHAPTER 51–52)
   - 2009 ICC–A117.1 ACCESSIBLE AND USABLE BUILDINGS AND FACILITIES
2. COORDINATE ALL NEW WORK WITH STRUCTURE AND OTHER TRADES.
3. FIELD VERIFY UNIT LOCATIONS, DROPS AND POSITIONS.
4. ALL LINE VOLTAGE WORK SHALL BE BY ELECTRICIAN.
5. SMOKE DETECTOR WIRE SHALL BE BY ELECTRICIAN; SIGNAL SHALL BE RECEIVED BY FIRE AND LIFE SAFETY.
6. ALL FIRE/SMOKE DAMPERS AND SMOKE DETECTORS SHALL BE POWERED BY OTHERS.
7. ALL DUCT MOUNTED SMOKE DETECTORS SHALL BE SUPPLIED AND INSTALLED BY THE MECHANICAL CONTRACTOR.
8. A 120–VOLT SERVICE RECEPTACLE SHALL BE LOCATED WITHIN 25' OF EACH PIECE OF EQUIPMENT. DISCONNECT SHALL BE BY ELECTRICAL CONTRACTOR.
9. ROOM SENSORS SHALL BE MOUNTED ON WALLS NO MORE THAN 48" ABOVE FINISHED FLOOR FOR ADA ACCESSIBILITY.
10. HVAC EQUIPMENT WEIGHTS AND LOCATIONS SHALL BE APPROVED BY STRUCTURAL ENGINEER.
11. HEATING AND COOLING LOAD CALCULATIONS USE THE FOLLOWING BUILDING THERMAL INSULATION VALUES AND DESIGN TEMPERATURES IN ACCORDANCE WITH 2012 WSEC AND THE ASHRAE RECOMMENDED OUTDOOR DESIGN TEMPERATURES FOR WASHINGTON STATE:

SUMMER OSA:	83°F DB/67°F WB	ROOF:	U = 0.031 BTU/HR/SF/°F
WINTER OSA:	17°F	WALLS:	U = 0.045 BTU/HR/SF/°F
		STOREFRONT WINDOWS:	U = 0.60 BTU/HR/SF/°F SHGC = 0.40

12. SUPPLY AND RETURN AIR DUCTWORK SHALL BE LINED WITH 1" SOUND LINER WITHIN 10' OF EQUIPMENT.
13. MAXIMUM FLEXIBLE DUCT LENGTH SHALL BE 8'–0".
14. PIPE AND DUCT DIMENSIONS SHOWN ARE NOMINAL SIZES.
15. COORDINATE ALL PIPING AND VENTING WITH BELOW GRADE FOUNDATIONS, STRUCTURE, FIRE PROTECTION AND OTHER TRADES.
16. AN ACCESSIBLE GAS SHUT–OFF VALVE SHALL BE INSTALLED WITHIN 3' OF ALL GAS APPLIANCES.
17. GAS PIPING SHALL RUN ABOVE THE ROOF, UNLESS NOTED OTHERWISE.
18. MAINTAIN 15'–0" MINIMUM DISTANCE BETWEEN OSA INTAKES AND PLUMBING VENTS, EXHAUST AND COMBUSTION AIR OUTLETS.

CODE COMPLIANCE NOTES

1. HEATING AND COOLING SYSTEMS HAVE BEEN SIZED IN ACCORDANCE WITH STANDARD ENGINEERING PRACTICES AND AS REQUIRED BY 2012 WSEC SECTIONS C403.2.1 AND C403.2.2.
2. VENTILATION SHALL BE PROVIDED IN ACCORDANCE WITH 2012 WSEC SECTION C403.2.5 USING MINIMUM REQUIRED RATES.
3. HEAT PUMP CONTROLS SHALL BE CAPABLE OF MINIMIZING THE USE OF SUPPLEMENTAL HEAT AS DESCRIBED IN 2012 WSEC SECTION C403.2.4.1.1.
4. CONTROLS SHALL BE CAPABLE OF PROVIDING 5 DEGREE DEAD BAND AS REQUIRED BY 2012 WSEC SECTION C403.2.4.2.
5. CONTROLS SHALL BE CAPABLE OF PROVIDING SEVEN DAY PROGRAMMABLE TEMPERATURE SETTINGS, AUTOMATIC SETBACK AND SHUTOFF AND OPTIMUM START AS REQUIRED BY 2012 WSEC SECTION C403.2.4.3.
6. MOTORIZED AND GRAVITY DAMPERS SHALL BE PROVIDED AS REQUIRED BY 2012 WSEC SECTION C403.2.4.4, INCLUDING MAXIMUM LEAKAGE RATES IN ACCORDANCE WITH 2012 WSEC C402.4.5.2. GRAVITY DAMPERS USED FOR OUTSIDE AIR INTAKE SHALL BE PROTECTED FROM WIND INFLUENCES.
7. DUCT WORK SHALL BE INSULATED AND PROVIDED WITH VAPOR BARRIER AS REQUIRED BY 2012 WSEC SECTION C403.2.7 AND AS FOLLOWS:

TYPE	LOCATION	R–VALUE
OUTSIDE AIR >2800 CFM	IN CONDITIONED SPACE	REFER TO ARCH DWGS
OUTSIDE AIR <2800 CFM	IN CONDITIONED SPACE	7
SUPPLY OR RETURN	IN UNCONDITIONED SPACE	6
SUPPLY OR RETURN	OUTSIDE BUILDING	8

8. DUCT WORK SHALL BE SEALED IN ACCORDANCE WITH 2012 WSEC SECTION C403.2.7.3.
9. ALL DUCTWORK SPECIFIED SHALL BE CLASSIFIED AS LOW PRESSURE AND SHALL BE MANUFACTURED AND INSTALLED IN ACCORDANCE WITH 2012 IMC REQUIREMENTS AND CURRENT SMACNA STANDARDS FOR 2" WG, UNLESS HIGHER STATIC PRESSURES ARE INDICATED ON THE DRAWINGS.
10. MECHANICAL PIPING, IF EXPOSED TO THE ENVIRONMENT, SHALL BE PROTECTED IN ACCORDANCE WITH 2012 WSEC SECTION C403.2.8.1 AND ALL PIPING SHALL BE INSULATED AS REQUIRED BY 2012 WSEC C403.2.8 AS FOLLOWS:

FLUID OPERATING TEMPERATURE (°F)	PIPE SIZE (INCHES)	MINIMUM INSULATION THICKNESS (INCHES)
105–140	<1–1/2	1
105–140	1–1/2 AND LARGER	1–1/2
40–60	<1–1/2	1/2
40–60	1–1/2 AND LARGER	1

11. AIRSIDE ECONOMIZERS SHALL BE USED AS A FIRST STAGE OF COOLING AND SHALL BE CAPABLE OF PROVIDING FULL OR PARTIAL COOLING CAPACITY DEPENDING ON THE COOLING DEMAND AND THE OUTSIDE AIR TEMPERATURE IN ACCORDANCE WITH 2012 WSEC SECTION C403.3.1 OR C403.4.1.
12. SUPPLY AIR TEMPERATURE RESET BASED ON OUTSIDE AIR TEMPERATURE SHALL BE PROVIDED AS REQUIRED BY 2012 WSEC SECTION C403.4.5.4.
13. PROVIDE SEISMIC BRACING AND SUPPORTS IN ACCORDANCE WITH 2012 IBC FOR SEISMIC DESIGN CATEGORY D AND BASED ON AN IMPORTANCE FACTOR OF 1.0 FOR ALL SYSTEMS, EXCEPTING THE GAS PIPING SHALL HAVE AN IMPORTANCE FACTOR OF 1.5.
14. HVAC SYSTEMS HAVE BEEN DESIGNED TO COMPLY WITH 2012 WSEC SECTION C302.1 AND TO MAINTAIN 72°F MAX IN HEATING MODE AND 75° MIN IN COOLING MODE.
15. PROVIDE EACH INDIVIDUAL GRILLE, REGISTER, DIFFUSER AND OUTSIDE AIR CONNECTION WITH A VOLUME DAMPER OR OTHER MEANS OF ADJUSTMENT AS REQUIRED BY 2012 IMC, SECTION 603.18.

COMPLETION AND COMMISSIONING FOR MECHANICAL

COMMISSIONING OF MECHANICAL SYSTEMS AND CONTROLS SHALL BE PROVIDED AS REQUIRED IN ACCORDANCE WITH 2012 WSEC SECTION C408.2. COPIES OF ALL APPLICABLE SERVICE AND EQUIPMENT DATA, AND PROJECT DOCUMENTATION THAT RELATES, SHALL BE PROVIDED TO THE OWNER AND MADE AVAILABLE TO THE AUTHORITIES HAVING JURISDICTION (AHJS) WITHIN 90 DAYS OF RECEIPT OF THE CERTIFICATE OF OCCUPANCY INCLUDING:

1. PRELIMINARY COMMISSIONING REPORT AND OTHER RELATED REPORTS SUCH AS AIR BALANCING, START–UP AND/OR PRESSURE TESTING DATA.
2. RECORD DRAWINGS DEPICTING FINAL INSTALLATION CONFIGURATIONS OF SYSTEMS AND EQUIPMENT.
3. OPERATION AND MAINTENANCE EQUIPMENT MANUALS INCLUDING: MANUFACTURER'S INFORMATION WITH SPECIFIC MODEL NUMBERS AND OPTIONS NOTED, CONTROLS DATA INCLUDING CALIBRATION AND SETPOINT INFORMATION, AND A SIMPLE NARRATIVE DESCRIPTION OF EACH SYSTEM.

IN ADDITION, TRAINING OF THE MAINTENANCE STAFF SHALL BE PROVIDED AS REQUIRED BY 2012 WSEC SECTION C408.1.4, INCLUDING REVIEW OF DOCUMENTATION, HANDS–ON DEMONSTRATION OF OPERATION AND START–UP PROCEDURES AS WELL AS A TRAINING COMPLETION REPORT.

WHOLE BUILDING AND COMMISSIONING OF SYSTEMS THAT ARE NOT INCLUDED IN THE MECHANICAL SCOPE SHALL BE PROVIDED IN ACCORDANCE WITH 2012 WSEC SECTION C408.1 BY OTHERS.

VICINITY MAP

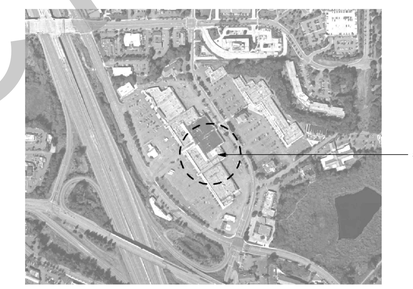

HVAC – LEGEND

- AIR FLOW DIRECTION
- SUPPLY OR OSA DUCT SECTION UP, ROUND OR RECTANGULAR
- RETURN, RELIEF OR EXHAUST DUCT SECTION UP, ROUND OR RECTANGULAR
- SUPPLY OR OSA DUCT SECTION DOWN, ROUND OR RECTANGULAR
- RETURN, RELIEF OR EXHAUST DUCT SECTION DOWN, ROUND OR RECTANGULAR
- RG – 100 — RETURN AIR GRILLE, NUMBER INDICATES CFM QUANTITY
- CD – 100 — SUPPLY AIR DIFFUSER, NUMBER INDICATES CFM QUANTITY
- EG – 100 — EXHAUST AIR GRILLE, NUMBER INDICATES CFM QUANTITY
- SLSM — SOUND LINED SHEET METAL
- FLEXIBLE EQUIPMENT CONNECTION
- SFD — COMBINATION FIRE AND SMOKE DAMPER
- FD — FIRE DAMPER
- VOLUME DAMPER
- M — MOTORIZED DAMPER
- TURNING VANES
- ROUND TO ROUND 45° FITTING
- SQUARE TO SQUARE 45° FITTING
- SQUARE TO ROUND 45° FITTING
- 45° FITTING FOR DUCTWORK
- GAS — GAS PIPING
- C — CARBON MONOXIDE SENSOR
- O — OCCUPANCY OR CARBON DIOXIDE SENSOR
- P — COORDINATED POWER LOCATION
- S — REMOTE SENSOR
- T — THERMOSTAT
- TERMINAL UNIT REQUIRED EQUIPMENT CLEARANCE

GENERAL – LEGEND

- FTU 1 — EQUIPMENT TAG TYPE; EQUIPMENT TAG NUMBER
- 1 M–0' — DETAIL OR DIAGRAM NUMBER; SHEET NUMBER WHERE DETAIL/DIAGRAM SHOWN
- 1 M–0' — SECTION LETTER; SHEET NUMBER WHERE SECTION IS SHOWN
- 1 — REVISION CLOUD AND CHRONOLOGICAL NUMBER
- DETAIL REFERENCE OUTLINE
- POINT OF CONNECTION TO EXISTING OR TO OTHERS' WORK
- 1 — KEY NOTE CALLOUT
- WORK TO BE REMOVED

LEGAL DESCRIPTION

XXX

BUILDING INFORMATION

ZONING:	COMMERCIAL TL–2
CONSTRUCTION TYPE:	III–A, FULLY SPRINKLERED
OCCUPANCY TYPE:	M – MERCHANTILE
CLIMATE ZONE:	4C KING COUNTY

MECHANICAL SCOPE – BUILDING B

SHELL AND CORE MECHANICAL WORK TO SUPPORT THE NEW CONSTRUCTION INCLUDING:

COMMON AREA VENTILATION,
ENVIRONMENTAL EXHAUST SYSTEMS,
NATURAL GAS SERVICE WITH SCHEDULE 40 GALVANIZED STEEL PIPING OUTDOORS AND BLACK STEEL INDOORS FOR FUTURE TENANT CONN,
ELECTRIC HEAT FOR FREEZE PROTECTION

AND CONSULTING FOR ANTICIPATED FUTURE TENANT IMPROVEMENTS.

TENANT IMPROVEMENT MECHANICAL WORK TO SUPPORT THE LANDLORD PROVIDED SYSTEMS AS PER THE INDIVIDUAL TENANTS' LEASE AGREEMENTS INCLUDING:

PACKAGED ROOFTOP HEATING VENTILATION AND AIR CONDITIONERS
ROOFTOP EXHAUST FANS
AND ASSOCIATED DUCTWORK, INSULATION, GRILLES, REGISTERS, DIFFUSERS, CONTROLS AND PIPING.

BUILDING OWNER

CENTERCAL PROPERTIES, INC.
1600 EAST FRANKLIN AVENUE
EL SEGUNDO, CA 90245
(310) 563–6900

CONTACT: RICK BEASON OR PATRICK BURNS

DRAWING INDEX – BUILDING B

SHEET #	SHEET TITLE
M0001B	MECHANICAL COVER SHEET
M0002B	MECHANICAL EQUIPMENT SCHEDULES
M1001B	SITE PLAN – MECHANICAL
M2101B	FIRST FLOOR PLAN – MECHANICAL
M2102B	SECOND FLOOR PLAN – MECHANICAL
M2801B	ROOF PLAN – MECHANICAL
M3001B	**EXTERIOR ELEVATIONS – MECHANICAL SHEET NOT INCLUDED IN THIS PROGRESS PRINTING**

NOT FOR CONSTRUCTION

COPYRIGHT NOTICE
THIS LAYOUT/DESIGN IS AN UNPUBLISHED WORK, AND MERIT MECHANICAL HEREBY RESERVES ITS COMMON LAW RIGHT, PURSUANT TO TITLE 17 SECTION 2 OF THE USA CODE TO PREVENT UNAUTHORIZED COPYING, PUBLICATION OR USE OF THIS DESIGN, AND TO OBTAIN DAMAGES THEREFORE.

THE VILLAGE AT TOTEM LAKE
BUILDING B - LOWER MALL

KIRKLAND, WASHINGTON 98034

COMFORT SYSTEMS USA
Merit Mechanical
9630 153RD AVENUE NE
REDMOND, WA 98052
(425) 883-9224
WA LICENSE: MERITM163QM
WWW.MERITMECHANICAL.COM

REVISIONS
0. FOR REVIEW — MAY 17, 2016

DESIGNED: DJH
CHECKED: MTS
DATE: 1-6-2016
JOB NUMBER: 115062
SHEET TITLE: **MECHANICAL COVER SHEET**
SHEET NUMBER: M0001B

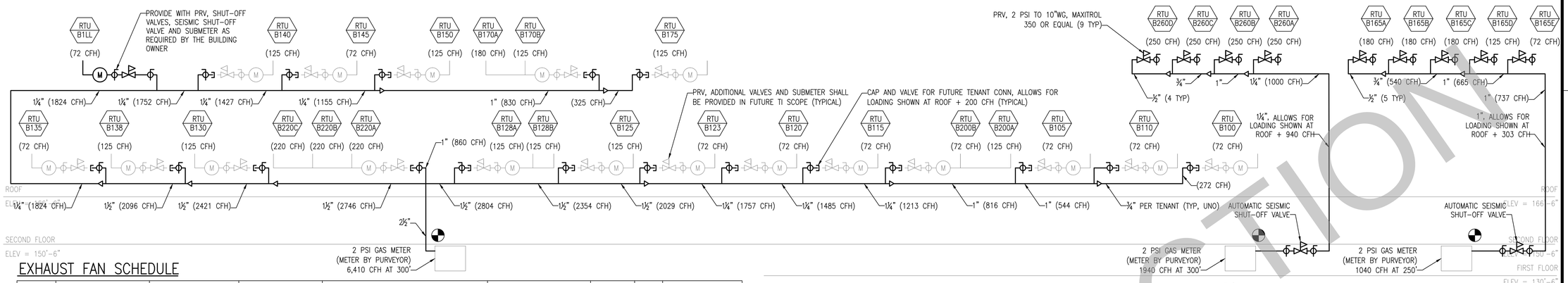

1 M0002B NATURAL GAS SCHEMATIC RISER DIAGRAM
SCALE: N/A (DIAGRAMS ARE REFLECTIVE OF THE ORIGINAL DESIGN AND MAY NOT BE REPRESENTATIVE OF AS-BUILT SYSTEMS)

EXHAUST FAN SCHEDULE

TAG	MANUFACTURER AND MODEL	DESCRIPTION	APPLICATION	FAN PERFORMANCE FLOW (CFM)	ESP MIN (WG)	HP	RPM	DRIVE	60 HERTZ ELECTRICAL DATA VOLTS	PHASE	FLA	MCCP	SOUND POWER (DBA)	UNIT WEIGHT (LBS)	NOTES
EF-1	GREENHECK SP-A510	CEILING FORWARD CURVED	ELECTRIC ROOM	350	0.40	224 WATTS	1070	DIRECT	120	1	3.3	15	4.5 SONES	40	1, 2, 3, 4, 5, 6
EF-2	GREENHECK SP-A510	CEILING FORWARD CURVED	TRASH ROOM	350	0.40	224 WATTS	1070	DIRECT	120	1	3.3	15	4.5 SONES	40	1, 2, 3, 4, 5
EF-B165	GREENHECK G-099-VG	ROOFTOP DOWNBLAST	TENANT 165 RR	600	0.75	1/4	1435	DIRECT	120	1	3.9	15	9.0 SONES	60	1, 2, 3, 7, 8, 9, 10
EF-B260	GREENHECK G-099-VG	ROOFTOP DOWNBLAST	TENANT 260 RR	600	0.75	1/4	1435	DIRECT	120	1	3.9	15	9.0 SONES	60	1, 2, 3, 7, 8, 9, 10

NOTES:
1. EQUIPMENT MAY BE SUBSTITUTED FOR EQUAL OR BETTER MANUFACTURER. REFER TO EQUIPMENT SUBMITTALS FOR FINAL SELECTIONS.
2. REFER TO ELECTRICAL DRAWINGS FOR MOTOR STARTER, DISCONNECT AND/OR CONVENIENCE OUTLET, AS APPLICABLE.
3. PROVIDE WITH MANUFACTURER'S SPEED CONTROLLER.
4. PROVIDE WITH MANUFACTURER'S SIDEWALL CAP (WHICH INCLUDES BIRDSCREEN AND BACKDRAFT DAMPER.)
5. PROVIDE WITH BACK DRAFT DAMPER AT BUILDING ENVELOPE PENETRATION AS ALLOWED BY 2012 WSEC OR SEC SECTION C403.2.4.4, EXCEPTION (4) FOR SYSTEMS THAT OPERATE CONTINUOUSLY.
6. CONTROL BY WALL MOUNTED THERMOSTAT.
7. CONTROL BY INTERLOCK WITH ASSOCIATED AIR HANDLING UNIT.
8. PROVIDE WITH MANUFACTURER'S ROOF CURB AND BIRD SCREEN.
9. PROVIDE WITH MOTORIZED DAMPERS AT BUILDING ENVELOPE PENETRATIONS AS REQUIRED BY 2012 WSEC OR SEC SECTION C402.4.5.2 (120 VOLTS, SINGLE PHASE, 15 MOCP).
10. PROVIDE WITH AT LEAST 70% EFFICIENT OR ELECTRONICALLY COMMUTATED MOTOR AS REQUIRED BY 2012 (WSEC OR SEC) SECTION C403.2.10.3 FOR FRACTIONAL HORSEPOWER FAN MOTORS THAT ARE 1/12 HORSEPOWER AND LARGER.

GRAVITY LOUVER SCHEDULE

TAG	MANUFACTURER AND MODEL	SIZE (IN) W x HT	FACE SIZE SQ FT	FREE AREA SQ FT	MAX CFM	FPM	INTAKE OR EXHAUST	# OF SECTIONS	NOTES
GL-B260	GREENHECK ESD-403	12x12	1.0	0.34	135	397	EXHAUST	1	1, 2

NOTES:
1. LOUVER MAY BE SUBSTITUTED FOR EQUAL OR BETTER MANUFACTURER.
2. PROVIDE WITH BACK DRAFT DAMPER AT BUILDING ENVELOPE PENETRATION AS ALLOWED FOR CLOTHES DRYER EXHAUST.

PACKAGED ROOFTOP UNIT SCHEDULE

TAG	TENANT AREA SQUARE FEET	DESIGN CRITERIA SQUARE FOOT/TON	POTENTIAL FUTURE MANUFACTURER AND MODEL	DESCRIPTION	MIN OSA (CFM)	INDOOR FAN PERFORMANCE SA (CFM)	ESP (IN WG)	BHP	FLA	COOLING CAPACITY TOTAL (MBH)	SENSIBLE (MBH)	SEER /EER	IEER	HEATING CAPACITY INPUT (MBH)	OUTPUT (MBH)	EFFICIENCY %	GAS SIZE (INCHES)	FILTRATION DISPOSABLE # / SIZE	60 HERTZ ELECTRICAL DATA VOLTS	PHASE	MCA	MOCP	SOUND POWER (DBA)	WEIGHTS BASE UNIT (LBS)	ACCESSORIES (LBS)	NOTES
RTU-B1LL	1425	285	CARRIER 48HCDA06	GAS/ELECTRIC ROOFTOP	200	2,000	1.00	1.56	3.4	63.8	49.3	15.2/12.5	–	72.0	56.0	82	1/2	4 / 16x16x2	460	3	14	20	77	600	180	2, 3, 4, 5, 6, 7, 8
RTU-B100	2349	392	CARRIER 48HCDA07	GAS/ELECTRIC ROOFTOP	240	2,400	1.40	2.32	4.2	78.9	58.4	–/12.0	13.0	72.0	56.0	82	1/2	4 / 16x20x2	460	3	17	20	82	770	240	1
RTU-B105	1425	285	CARRIER 48HCDA06	GAS/ELECTRIC ROOFTOP	200	2,000	1.00	1.56	3.4	63.8	49.3	15.2/12.5	–	72.0	56.0	82	1/2	4 / 16x16x2	460	3	14	20	77	600	180	1
RTU-B110	1417	355	CARRIER 48HCDA05	GAS/ELECTRIC ROOFTOP	160	1,600	1.00	1.13	2.6	50.6	38.1	15.6/–	–	72.0	56.0	82	1/2	4 / 16x16x2	460	3	13	15	78	590	180	1
RTU-B115	2025	338	CARRIER 48HCDA07	GAS/ELECTRIC ROOFTOP	240	2,400	1.40	2.32	4.2	78.9	58.4	–/12.0	13.0	72.0	56.0	82	1/2	4 / 16x20x2	460	3	17	20	82	770	240	1
RTU-B120	1499	300	CARRIER 48HCDA06	GAS/ELECTRIC ROOFTOP	200	2,000	1.00	1.56	3.4	63.8	49.3	15.2/12.5	–	72.0	56.0	82	1/2	4 / 16x16x2	460	3	14	20	77	600	180	1
RTU-B123	1403	351	CARRIER 48HCDA05	GAS/ELECTRIC ROOFTOP	160	1,600	1.00	1.13	2.6	50.6	38.1	15.6/–	–	72.0	56.0	82	1/2	4 / 16x16x2	460	3	13	15	78	590	180	1
RTU-B125	2405	321	CARRIER 48HCDD08	GAS/ELECTRIC ROOFTOP	300	3,000	1.00	1.57	3.8	98.1	74.1	–/12.0	13.8	125.0	103.0	82	1/2	4 / 20x20x2	460	3	20	25	82	930	240	1
RTU-B128A	5000/2	334	CARRIER 48HCDD08	GAS/ELECTRIC ROOFTOP	300	3,000	1.00	1.57	3.8	98.1	74.1	–/12.0	13.8	125.0	103.0	82	1/2	4 / 20x20x2	460	3	20	25	82	930	240	1
RTU-B128B	5000/2	334	CARRIER 48HCDD08	GAS/ELECTRIC ROOFTOP	300	3,000	1.00	1.57	3.8	98.1	74.1	–/12.0	13.8	125.0	103.0	82	1/2	4 / 20x20x2	460	3	20	25	82	930	240	1
RTU-B130	2645	353	CARRIER 48HCDD08	GAS/ELECTRIC ROOFTOP	300	3,000	1.00	1.57	3.8	98.1	74.1	–/12.0	13.8	125.0	103.0	82	1/2	4 / 20x20x2	460	3	20	25	82	930	240	1
RTU-B135	1232	308	CARRIER 48HCDA05	GAS/ELECTRIC ROOFTOP	160	1,600	1.00	1.13	2.6	50.6	38.1	15.6/–	–	72.0	56.0	82	1/2	4 / 16x16x2	460	3	13	15	78	590	180	1
RTU-B138	2779	371	CARRIER 48HCDD08	GAS/ELECTRIC ROOFTOP	300	3,000	1.00	1.57	3.8	98.1	74.1	–/12.0	13.8	125.0	103.0	82	1/2	4 / 20x20x2	460	3	20	25	82	930	240	1
RTU-B140	2550	340	CARRIER 48HCDD08	GAS/ELECTRIC ROOFTOP	300	3,000	1.00	1.57	3.8	98.1	74.1	–/12.0	13.8	125.0	103.0	82	1/2	4 / 20x20x2	460	3	20	25	82	930	240	1
RTU-B145	1291	324	CARRIER 48HCDA05	GAS/ELECTRIC ROOFTOP	160	1,600	1.00	1.13	2.6	50.6	38.1	15.6/–	–	72.0	56.0	82	1/2	4 / 16x16x2	460	3	13	15	78	590	180	1
RTU-B150	2350	314	CARRIER 48HCDD08	GAS/ELECTRIC ROOFTOP	300	3,000	1.00	1.57	3.8	98.1	74.1	–/12.0	13.8	125.0	103.0	82	1/2	4 / 20x20x2	460	3	20	25	82	930	240	1
RTU-B165A	13261/5	298	CARRIER 48HCDD11	GAS/ELECTRIC ROOFTOP	400	4,000	1.20	2.93	4.9	125.9	94.7	–/12.0	14.3	180.0	148.0	82	3/4	4 / 20x20x2	460	3	25	30	87	1090	240	2, 3, 4, 5, 6, 7, 8, 9
RTU-B165B	13261/5	298	CARRIER 48HCDD11	GAS/ELECTRIC ROOFTOP	400	4,000	1.20	2.93	4.9	125.9	94.7	–/12.0	14.3	180.0	148.0	82	3/4	4 / 20x20x2	460	3	25	30	87	1090	240	2, 3, 4, 5, 6, 7, 8, 9
RTU-B165C	13261/5	298	CARRIER 48HCDD11	GAS/ELECTRIC ROOFTOP	400	4,000	1.20	2.93	4.9	125.9	94.7	–/12.0	14.3	180.0	148.0	82	3/4	4 / 20x20x2	460	3	25	30	87	1090	240	2, 3, 4, 5, 6, 7, 8, 9
RTU-B165D	13261/5	298	CARRIER 48HCDD09	GAS/ELECTRIC ROOFTOP	340	3,400	1.00	1.57	3.8	109.1	83.2	–/12.0	13.8	125.0	103.0	82	1/2	4 / 20x20x2	460	3	20	25	82	930	240	2, 3, 4, 5, 6, 7, 8, 9
RTU-B165E	13261/5	298	CARRIER 48HCDA07	GAS/ELECTRIC ROOFTOP	240	2,400	1.40	2.32	4.2	78.9	58.4	–/12.0	13.0	72.0	56.0	82	1/2	4 / 16x20x2	460	3	17	20	82	770	240	2, 3, 4, 5, 6, 7, 8, 9
RTU-B170A	6353/2	344	CARRIER 48HCDD11	GAS/ELECTRIC ROOFTOP	400	4,000	1.20	2.93	4.9	125.9	94.7	–/12.0	14.3	180.0	148.0	82	3/4	4 / 20x20x2	460	3	25	30	87	1090	240	1
RTU-B170B	6353/2	344	CARRIER 48HCDD09	GAS/ELECTRIC ROOFTOP	340	3,400	1.00	1.57	3.8	109.1	83.2	–/12.0	13.8	125.0	103.0	82	1/2	4 / 20x20x2	460	3	20	25	82	930	240	1
RTU-B175	2795	329	CARRIER 48HCDD09	GAS/ELECTRIC ROOFTOP	340	3,400	1.00	1.57	3.8	109.1	83.2	–/12.0	13.8	125.0	103.0	82	1/2	4 / 20x20x2	460	3	20	25	82	930	240	1
RTU-B200A	4580/2	340	CARRIER 48HCDD08	GAS/ELECTRIC ROOFTOP	300	3,000	1.00	1.57	3.8	98.1	74.1	–/12.0	13.8	125.0	103.0	82	1/2	4 / 20x20x2	460	3	20	25	82	930	240	1
RTU-B200B	4580/2	340	CARRIER 48HCDA07	GAS/ELECTRIC ROOFTOP	240	2,400	1.40	2.32	4.2	78.9	58.4	–/12.0	13.0	72.0	56.0	82	1/2	4 / 16x20x2	460	3	17	20	82	770	240	1
RTU-B220A	15,000/3	334	CARRIER 48HCDD17	GAS/ELECTRIC ROOFTOP	600	6,000	1.00	3.15	4.9	192.3	142.0	–/12.0	13.5	220.0	178.0	81	3/4	6 / 20x25x2	460	3	36.4	45	84	1895	505	1
RTU-B220B	15,000/3	334	CARRIER 48HCDD17	GAS/ELECTRIC ROOFTOP	600	6,000	1.00	3.15	4.9	192.3	142.0	–/12.0	13.5	220.0	178.0	81	3/4	6 / 20x25x2	460	3	36.4	45	84	1895	505	1
RTU-B220C	15,000/3	334	CARRIER 48HCDD17	GAS/ELECTRIC ROOFTOP	600	6,000	1.00	3.15	4.9	192.3	142.0	–/12.0	13.5	220.0	178.0	81	3/4	6 / 20x25x2	460	3	36.4	45	84	1895	505	1
RTU-B260A	35,000/4	350	TRANE YHD300	GAS/ELECTRIC ROOFOP	950	9,500	1.00	6.71	11	306.9	238.6	–/10.6	15.0	250	200	80	1/2	8 / 20x20x2 4 / 20x16x2	460	3	57	70	9.4BELS	2720	550	1, 10
RTU-B260B	35,000/4	350	TRANE YHD300	GAS/ELECTRIC ROOFOP	950	9,500	1.00	6.71	11	306.9	238.6	–/10.6	15.0	250	200	80	1/2	8 / 20x20x2 4 / 20x16x2	460	3	57	70	9.4BELS	2720	550	1, 10
RTU-B260C	35,000/4	350	TRANE YHD300	GAS/ELECTRIC ROOFOP	950	9,500	1.00	6.71	11	306.9	238.6	–/10.6	15.0	250	200	80	1/2	8 / 20x20x2 4 / 20x16x2	460	3	57	70	9.4BELS	2720	550	1, 10
RTU-B260D	35,000/4	350	TRANE YHD300	GAS/ELECTRIC ROOFOP	950	9,500	1.00	6.71	11	306.9	238.6	–/10.6	15.0	250	200	80	1/2	8 / 20x20x2 4 / 20x16x2	460	3	57	70	9.4BELS	2720	550	1, 10

NOTES:
1. EQUIPMENT SHALL BE INSTALLED BY FUTURE TENANT AND MAY BE SUBSTITUTED FOR EQUAL OR BETTER MANUFACTURER.
2. REFER TO ELECTRICAL DRAWINGS FOR MOTOR STARTER, DISCONNECT, AND POWERED CONVENIENCE OUTLET, AS APPLICABLE.
3. PROVIDE WITH MANUFACTURER'S ECONOMIZER AND DOWNFLOW ROOF CURB OPTIONS.
4. PROVIDE WITH WALL-MOUNTED, 7-DAY PROGRAMMABLE THERMOSTAT AT 48" AFF MAX, HONEYWELL VISION PRO 8000 OR EQUAL.
5. PROVIDE WITH MOTORIZED DAMPERS AT BUILDING ENVELOPE PENETRATIONS OF OUTSIDE AIR, RELIEF AND EXHAUST DUCTS AS REQUIRED BY 2012 WSEC SECTION C402.4.5.2 (120 VOLTS, SINGLE PHASE, 15 MOCP).
6. PROVIDE WITH BACK DRAFT DAMPER AT BUILDING ENVELOPE PENETRATION AS ALLOWED BY 2012 WSEC SECTION C403.2.4.4, EXCEPTION (1) FOR RELIEF OF SYSTEMS WITH LESS THAN 5,000 CFM OF SUPPLY AIR FLOW AND IN BUILDINGS LESS THAN 3 STORIES IN HEIGHT.
7. PROVIDE WITH RETURN AIR SMOKE DETECTOR AS REQUIRED BY 2012 IMC SECTION 606.2 FOR SYSTEMS WITH MORE THAN 2000 CFM SUPPLY.
8. PROVIDE WITH MANUFACTURER'S MEDIUM STATIC 2-SPEED INDOOR FAN OPTION.
9. EQUIPMENT SHALL BE INSTALLED BY MERIT AND MAY BE SUBSTITUTED FOR EQUAL OR BETTER MANUFACTURER. PROVIDE DUCT DROPS INTO SPACE AND THERMOSTAT WITH COILED WIRE FOR FUTURE TENANT RELOCATION.
10. MANUFACTURER'S ROOF CURB SHALL BE PROVIDED BY TENANT TO BE INSTALLED BY MERIT.

NOT FOR CONSTRUCTION

COPYRIGHT NOTICE
THIS LAYOUT/DESIGN IS AN UNPUBLISHED WORK, AND MERIT MECHANICAL HEREBY RESERVES ITS COMMON LAW RIGHT, PURSUANT TO TITLE 17 SECTION 2 OF THE USA CODE TO PREVENT UNAUTHORIZED COPYING, PUBLICATION OR USE OF THIS DESIGN, AND TO OBTAIN DAMAGES THEREFORE.

THE VILLAGE AT TOTEM LAKE
BUILDING B - LOWER MALL
KIRKLAND, WASHINGTON 98034

COMFORT SYSTEMS USA
Merit Mechanical
9630 153RD AVENUE NE
REDMOND WA 98052
(425) 883-9224
WA LICENSE: MERITM163CM
WWW.MERITMECHANICAL.COM

REVISIONS
0. FOR REVIEW MAY 17, 2016

DESIGNED DJH
CHECKED MTS
DATE 1-6-2016
JOB NUMBER 115062
SHEET TITLE
EQUIPMENT SCHEDULES
SHEET NUMBER
M0002B
SHEET 2 OF 7

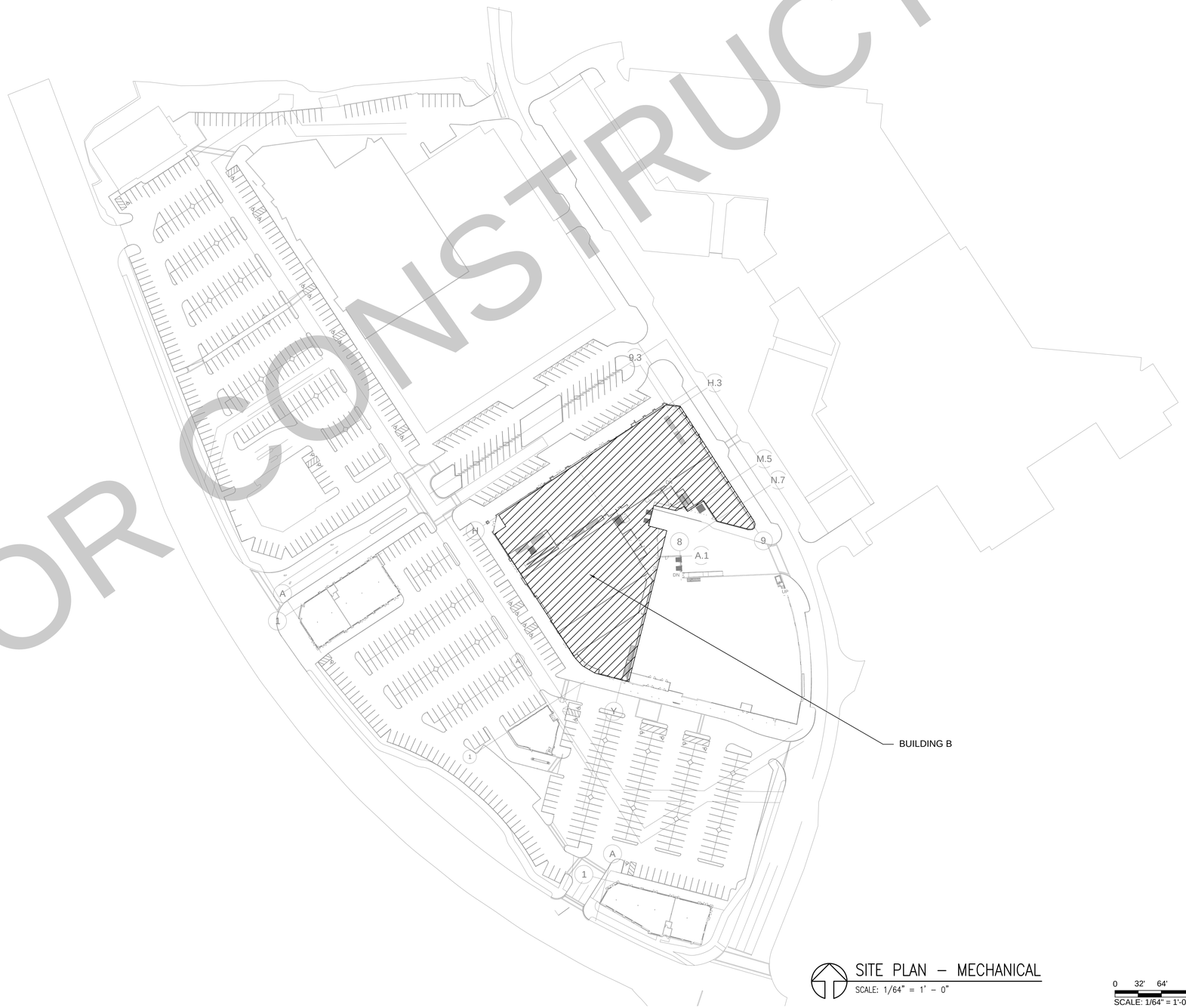

SITE PLAN – MECHANICAL
SCALE: 1/64" = 1' – 0"

0 32' 64' 128'
SCALE: 1/64" = 1'-0"

NOT FOR CONSTRUCTION

COPYRIGHT NOTICE
THIS LAYOUT/DESIGN IS AN UNPUBLISHED WORK, AND MERIT MECHANICAL HEREBY RESERVES ITS COMMON LAW RIGHT, PURSUANT TO TITLE 17 SECTION 2 OF THE USA CODE TO PREVENT UNAUTHORIZED COPYING, PUBLICATION OR USE OF THIS DESIGN, AND TO OBTAIN DAMAGES THEREFORE.

THE VILLAGE AT TOTEM LAKE
BUILDING B - LOWER MALL

KIRKLAND, WASHINGTON 98034

COMFORT SYSTEMS USA
Merit Mechanical
9630 153RD AVENUE NE
REDMOND, WA 98052
(425) 883-9224
WA LICENSE: MERITM163CM
WWW.MERITMECHANICAL.COM

REVISIONS
0. FOR REVIEW MAY 17, 2016

DESIGNED
DJH

CHECKED
MTS

DATE
1-6-2016

JOB NUMBER
115062

SHEET TITLE
SITE PLAN - MECHANICAL

SHEET NUMBER
M1001B

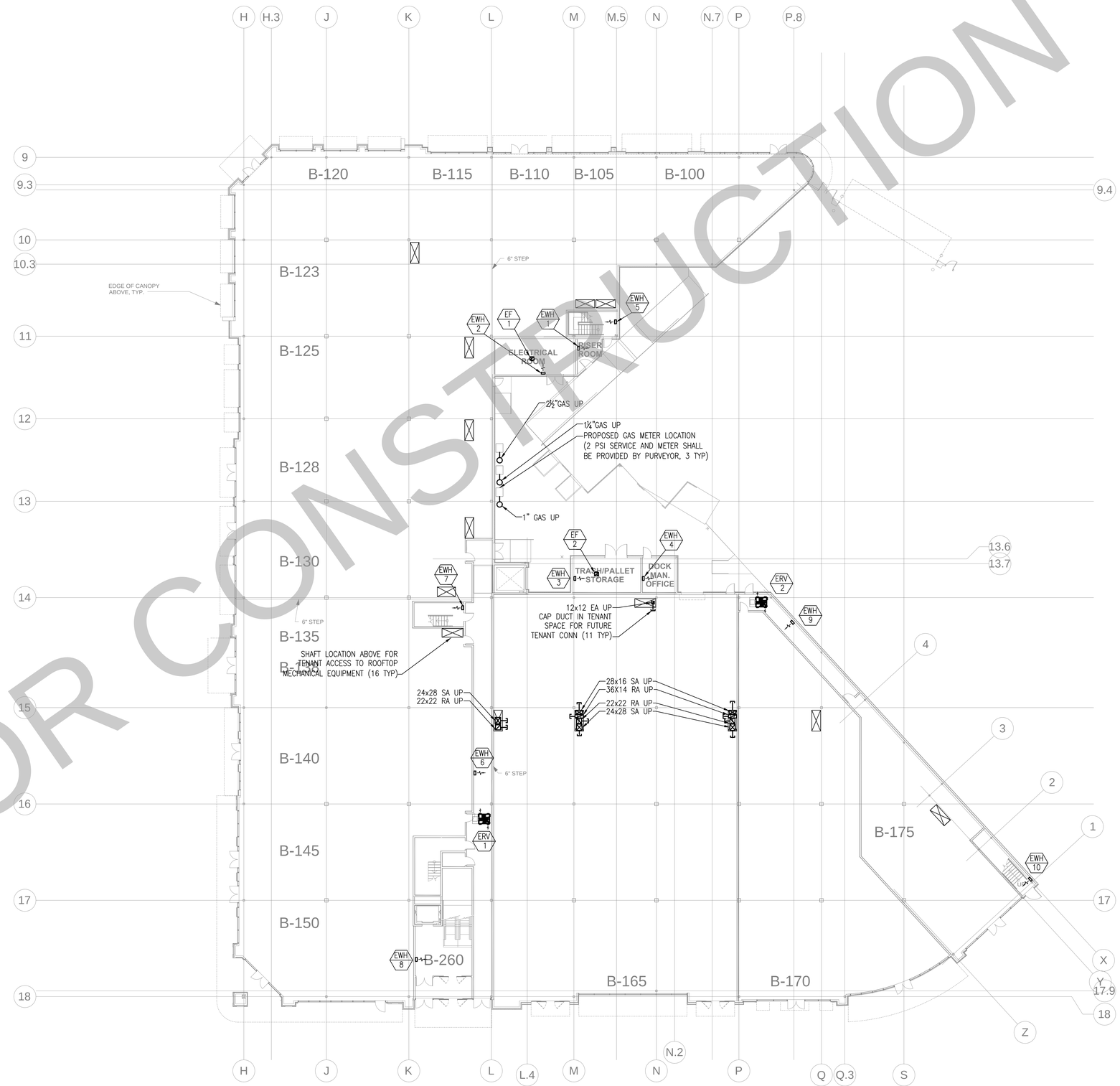

FIRST FLOOR PLAN – MECHANICAL

SCALE: 1/16" = 1' – 0"

0 8' 16' 32'

SCALE: 1/16" = 1'-0"

NOT FOR CONSTRUCTION

COPYRIGHT NOTICE

THIS LAYOUT/DESIGN IS AN UNPUBLISHED WORK, AND MERIT MECHANICAL HEREBY RESERVES ITS COMMON LAW RIGHT, PURSUANT TO TITLE 17 SECTION 2 OF THE USA CODE TO PREVENT UNAUTHORIZED COPYING, PUBLICATION OR USE OF THIS DESIGN, AND TO OBTAIN DAMAGES THEREFORE.

THE VILLAGE AT TOTEM LAKE
BUILDING B - LOWER MALL

KIRKLAND, WASHINGTON 98034

COMFORT SYSTEMS USA
Merit Mechanical
9630 153RD AVENUE NE
REDMOND, WA 98052
(425) 883-9224
WA LICENSE: MERITM163CM
WWW.MERITMECHANICAL.COM

REVISIONS
0. FOR REVIEW MAY 17, 2016

DESIGNED
DJH

CHECKED
MTS

DATE
1-6-2016

JOB NUMBER
115062

SHEET TITLE
FIRST FLOOR PLAN - MECH

SHEET NUMBER
M2101B

SHEET 4 OF 7

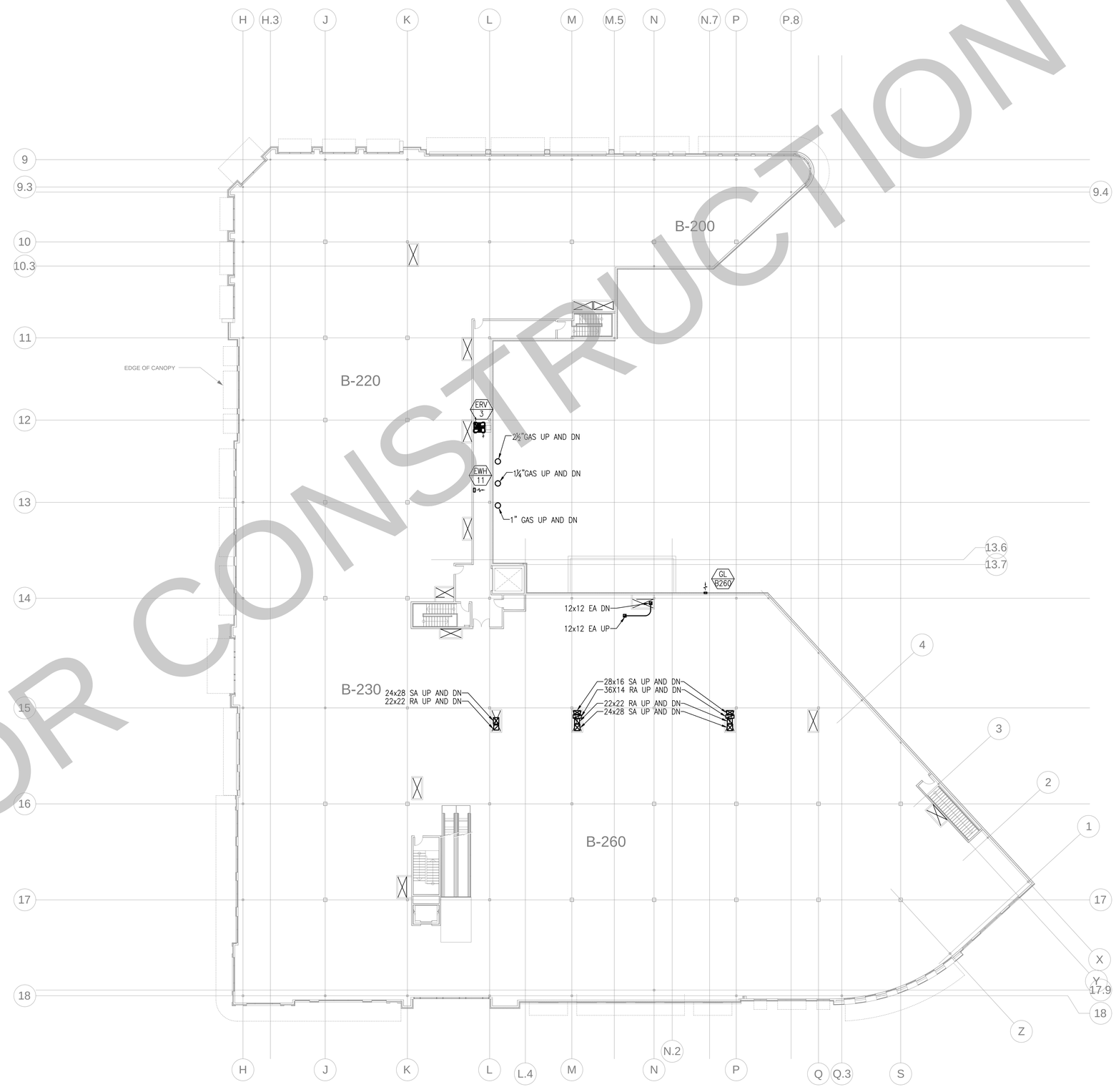

SECOND FLOOR PLAN – MECHANICAL

SCALE: 1/16" = 1' – 0"

0 8' 16' 32'

SCALE: 1/16" = 1'-0"

NOT FOR CONSTRUCTION

COPYRIGHT NOTICE

THIS LAYOUT/DESIGN IS AN UNPUBLISHED WORK, AND MERIT MECHANICAL HEREBY RESERVES ITS COMMON LAW RIGHT, PURSUANT TO TITLE 17 SECTION 2 OF THE USA CODE TO PREVENT UNAUTHORIZED COPYING, PUBLICATION OR USE OF THIS DESIGN, AND TO OBTAIN DAMAGES THEREFORE.

THE VILLAGE AT TOTEM LAKE
BUILDING B - LOWER MALL

KIRKLAND, WASHINGTON 98034

COMFORT SYSTEMS USA
Merit Mechanical
9630 153RD AVENUE NE
REDMOND, WA 98052
(425) 883-9224
WA LICENSE: MERITM163CM
WWW.MERITMECHANICAL.COM

REVISIONS
0. FOR REVIEW MAY 17, 2016

DESIGNED
DJH

CHECKED
MTS

DATE
1-6-2016

JOB NUMBER
115062

SHEET TITLE
SECOND FLOOR PLAN - MECH

SHEET NUMBER
M2102B

SHEET 5 OF 7

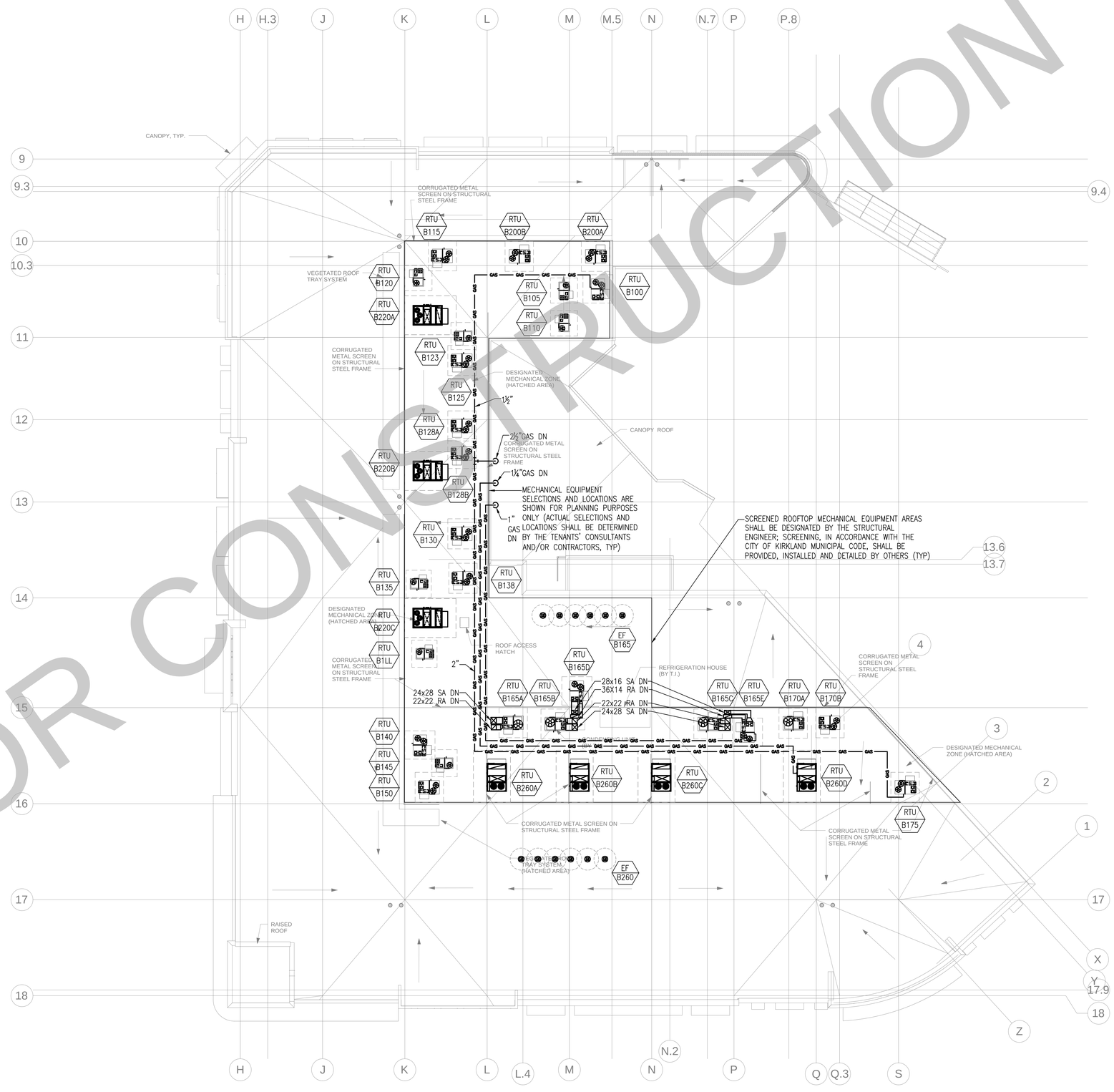

ROOF PLAN – MECHANICAL

SCALE: 1/16" = 1' – 0"

0 8' 16' 32'
SCALE: 1/16" = 1'-0"

NOT FOR CONSTRUCTION

COPYRIGHT NOTICE

THIS LAYOUT/DESIGN IS AN UNPUBLISHED WORK, AND MERIT MECHANICAL HEREBY RESERVES ITS COMMON LAW RIGHT, PURSUANT TO TITLE 17 SECTION 2 OF THE USA CODE TO PREVENT UNAUTHORIZED COPYING, PUBLICATION OR USE OF THIS DESIGN, AND TO OBTAIN DAMAGES THEREFORE.

THE VILLAGE AT TOTEM LAKE
BUILDING B - LOWER MALL

KIRKLAND, WASHINGTON 98034

COMFORT SYSTEMS USA
Merit Mechanical
9630 153RD AVENUE NE
REDMOND, WA 98052
(425) 883-9224
WA LICENSE: MERITM163CM
WWW.MERITMECHANICAL.COM

REVISIONS
0. FOR REVIEW MAY 17, 2016

DESIGNED
DJH

CHECKED
MTS

DATE
1-6-2016

JOB NUMBER
115062

SHEET TITLE
ROOF PLAN - MECHANICAL

SHEET NUMBER
M2801B

SHEET 6 OF 7

PLUMBING FIXTURES SCHEDULE – BUILDING B

TAG	DESCRIPTION	LOCATION	CONNECTION SIZES CW	HW	WASTE	VENT	ACCESSORIES/REMARKS	NOTES
AD–1	AREA DRAIN	LOADING DOCK	–	–	3	–	9"ø FLOOR DRAIN WITH HEAVY DUTY GRATE AND SEDIMENT BASKET	1, 2, 3
DN–1	DOWNSPOUT NOZZLE	EXTERIOR WALLS	–	–	4	–	ALL PLAIN BRONZE BODY "COWS TONGUE"	1, 2
DN–2	DOWNSPOUT NOZZLE	EXTERIOR WALLS	–	–	6	–	ALL PLAIN BRONZE BODY "COWS TONGUE"	1, 2
FD–1	FLOOR DRAIN	FLOOR	–	–	3	1–1/2	6"ø WITH NICKEL BRONZE STRAINER	1, 2, 3
FD–2	FLOOR DRAIN	FLOOR	–	–	4	2	7"ø STRAINER WITH AN INTERGRAL 4"ø FUNNEL	1, 2, 3
HB–1	HOSE BIBB	EXTERIOR WALLS	1/2	–	–	–	FREEZELESS WITH BACKFLOW PREVENTION FEATURE AND AUTO DRAIN	1, 2
OD–1	ROOF DRAIN	ROOF	–	–	3	–	COMBINATION PRIMARY AND OVERFLOW WITH LOW PROFILE DOMES	1, 2
OD–2	ROOF DRAIN	ROOF	–	–	4	–	COMBINATION PRIMARY AND OVERFLOW WITH LOW PROFILE DOMES	1, 2
LV–1	LAVATORY	RESTROOM	1/2	1/2	2	1–1/2	FIXTURE SELECTION SHALL BE COORDINATED WITH TENANT	1, 2
MS–1	MOP SINK	JANITOR ROOM	1/2	1/2	3	2	FIXTURE SELECTION SHALL BE COORDINATED WITH TENANT	1, 2
SK–1	SINK	BREAK ROOM	1/2	1/2	2	1–1/2	FIXTURE SELECTION SHALL BE COORDINATED WITH TENANT	1, 2
WC–1	WATER CLOSET	RESTROOM	1–1/2	–	4	2	FIXTURE SELECTION SHALL BE COORDINATED WITH TENANT	1, 2

NOTES:
1. REFER TO EQUIPMENT SUBMITTALS FOR MANUFACTURERS AND MODEL NUMBERS.
2. REFER TO ARCHITECTURAL PLANS FOR FINAL FIXTURE LOCATIONS AND TO ARCHITECTURAL ELEVATIONS FOR MOUNTING HEIGHTS.
3. PROVIDE WITH SURESEAL TRAP SEAL OR EQUAL.

ABBREVIATIONS

ø	DIAMETER
ABV	ABOVE
AD	ACCESS DOOR
AFF	ABOVE FINISHED FLOOR
AHU	AIR HANDLING UNIT
AP	ACCESS PANEL
BF	BELOW FLOOR
BOT	BOTTOM
CIP	CAST IN PLACE
CLG	CEILING
CONC	CONCRETE
CONN	CONNECTION
CW	COLD WATER
DIA	DIAMETER
DN	DOWN
DWG	DRAWING
EA	EACH
EQUIP	EQUIPMENT
FCO	FLOOR CLEANOUT
FF	FINISHED FLOOR
FLR	FLOOR
FOG	FATS, OILS AND GREASE
FT	FOOT OR FEET
FUT	FUTURE
GAL	GALLON
GALV	GALVANIZED
HP	HORSEPOWER
HT	HEIGHT
HVAC	HEATING, VENTILATION AND AIR–CONDITIONING
HW	HOT WATER
HWSFU	HOT WATER SUPPLY FIXTURE UNITS
IBC	INTERNATIONAL BUILDING CODE
ID	INSIDE DIAMTER
IE	INVERT ELEVATION
IMC	INTERNATIONAL MECHANICAL CODE
IN	INCHES
IN WG	INCHES WATER GAUGE
LBS	POUNDS
LIN FT	LINEAR FOOT OR FEET
MAX	MAXIMUM
MBH	1000 BRITISH THERMAL UNITS PER HOUR
MIN	MINIMUM
MOCP	MAX OVER CURRENT PROTECTION
MTD	MOUNTED
NO	NUMBER
N/A	NOT APPLICABLE
OD	OUTSIDE DIAMETER/DIMENSION
PH	PHASE
POC	POINT OF CONNECTION
PRESS	PRESSURE
PSI	POUNDS PER SQUARE INCH
RPBP	REDUCED PRESSURE BACKFLOW PREVENTER
RPM	REVOLUTIONS PER MINUITE
SOG	SLAB ON GRADE
SBC	SEATTLE BUILDING CODE
SEC	SEATTLE ENERGY CODE
SMC	SEATTLE MECHANICAL CODE
SL	SOUND LINED
SQ FT	SQUARE FOOT OR FEET
SS	STAINLESS STEEL
TDH	TOTAL DYNAMIC HEAD
TYP	TYPICAL
UNO	UNLESS NOTED OTHERWISE
UPC	UNIFORM PLUMBING CODE
VTR	VENT THROUGH ROOF
W	WATTS OR WIDTH
W/	WITH
W/O	WITHOUT
WCO	WALL CLEANOUT
WG	WATER GAUGE
WSEC	WASHINGTON STATE ENERGY CODE (AKA CHAPTER 51–11C WAC)
WSFU	WATER SUPPLY FIXTURE UNITS

PLUMBING – LEGEND

- DIRECTION OF FLOW
- SUPPLY OR RETURN ELBOW SECTION UP
- SUPPLY OR RETURN ELBOW SECTION DOWN
- SUPPLY OR RETURN TEE SECTION UP
- SUPPLY OR RETURN TEE SECTION DN
- EXISTING PIPING
- HOT WATER RECIRCULATION PIPING
- HOT WATER PIPNG
- COLD WATER PIPING
- SANITARY WASTE PIPING
- VENT PIPING
- WASTE BELOW GROUND
- RWL — RAINWATER LEADER
- ORWL — OVERFLOW RAINWATER LEADER
- GW — COMMERCIAL KITCHEN GREASE WASTE
- CD — CONDENSATE DRAIN
- NP — NON–POTABLE COLD WATER
- BALL VALVE
- GATE VALVE
- BUTTERFLY VALVE
- CIRCUIT SETTER
- CHECK VALVE
- RELIEF VALVE
- PRESSURE REDUCING VALVE
- REDUCED PRESSURE BACKFLOW PREVENTER
- FLOOR DRAIN
- ROOF DRAIN
- HOSE BIBB/WALL HYDRANT
- TP — TRAP PRIMER
- FLEXIBLE CONNECTION
- EXPANSION JOINT
- PORTABLE INSTRUMENT CONNECTION
- STRAINER
- UNION
- PLUG AND/OR CAP
- PRESSURE GAUGE
- THERMOMETER
- FLUSH CLEANOUT
- MAV — MANUAL AIR VENT
- AAV — AUTOMATIC AIR VENT

GENERAL – LEGEND

- FTU / 1 — EQUIPMENT TAG TYPE / EQUIPMENT TAG NUMBER
- 1 / M–0" — DETAIL OR DIAGRAM NUMBER / SHEET NUMBER WHERE DETAIL/DIAGRAM SHOWN
- 1 / M–0" — SECTION LETTER / SHEET NUMBER WHERE SECTION IS SHOWN
- 1 — REVISION CLOUD AND CHRONOLOGICAL NUMBER
- DETAIL REFERENCE OUTLINE
- POINT OF CONNECTION TO EXISTING OR TO OTHERS' WORK
- 1 — KEY NOTE CALLOUT
- WORK TO BE REMOVED

COMPLETION AND COMMISSIONING FOR DOMESTIC HOT WATER SYSTEMS

COMMISSIONING OF MECHANICAL SYSTEMS AND CONTROLS SHALL BE PROVIDED AS REQUIRED IN ACCORDANCE WITH 2012 WSEC SECTION C408.2. COPIES OF ALL APPLICABLE SERVICE AND EQUIPMENT DATA, AND PROJECT DOCUMENTATION THAT RELATES, SHALL BE PROVIDED TO THE OWNER AND MADE AVAILABLE TO THE AUTHORITIES HAVING JURISDICTION (AHJS) WITHIN 90 DAYS OF RECEIPT OF THE CERTIFICATE OF OCCUPANCY INCLUDING:

1. PRELIMINARY COMMISSIONING REPORT AND OTHER RELATED REPORTS SUCH AS BALANCING, START–UP AND/OR PRESSURE TESTING DATA.
2. RECORD DRAWINGS DEPICTING FINAL INSTALLATION CONFIGURATIONS OF SYSTEMS AND EQUIPMENT.
3. OPERATION AND MAINTENANCE EQUIPMENT MANUALS INCLUDING: MANUFACTURER'S INFORMATION WITH SPECIFIC MODEL NUMBERS AND OPTIONS NOTED, CONTROLS DATA INCLUDING CALIBRATION AND SETPOINT INFORMATION, AND A SIMPLE NARRATIVE DESCRIPTION OF EACH SYSTEM.

IN ADDITION, TRAINING OF THE MAINTENANCE STAFF SHALL BE PROVIDED AS REQUIRED BY 2012 WSEC SECTION C408.1.4, INCLUDING REVIEW OF DOCUMENTATION, HANDS–ON DEMONSTRATION OF OPERATION AND START–UP PROCEDURES AS WELL AS A TRAINING COMPLETION REPORT.

WHOLE BUILDING AND COMMISSIONING OF SYSTEMS THAT ARE NOT INCLUDED IN THE MECHANICAL SCOPE SHALL BE PROVIDED IN ACCORDANCE WITH 2012 WSEC SECTION C408.1 BY OTHERS.

CODE COMPLIANCE NOTES

1. MECHANICAL PIPING, IF EXPOSED TO THE ENVIRONMENT, SHALL BE PROTECTED IN ACCORDANCE WITH 2012 WSEC SECTION C403.2.8.1 AND ALL PIPING SHALL BE INSULATED AS REQUIRED BY 2012 WSEC C403.2.8 AS FOLLOWS:

FLUID OPERATING TEMPERATURE (°F)	PIPE SIZE (INCHES)	MINIMUM INSULATION THICKNESS (INCHES)
105–140	<1–1/2	1
105–140	1–1/2 AND LARGER	1–1/2

2. CLEANOUTS SHALL BE LOCATED IN HORIZONTAL WASTE PIPING AS REQUIRED BY 2012 UPC SECTION 707.4, INCLUDING ONE AT EACH UPPER TERMINAL, EACH CHANGE OF DIRECTION THAT IS GREATER THAN 135° AND IN RUNS GREATER THAN 100 FEET IN LENGTH.
3. FIXTURES LOCATED ON A FLOOR LEVEL THAT IS BELOW THE NEXT UPSTREAM MANHOLE OR BELOW THE MAIN SEWER LEVEL SHALL BE PROVIDED WITH BACKWATER VALVES AS REQUIRED BY 2012 UPC SECTION 710.1.

GENERAL NOTES

1. COORDINATE ALL NEW WORK WITH STRUCTURE AND OTHER TRADES.
2. FIELD VERIFY UNIT LOCATIONS, DROPS AND POSITIONS.
3. ALL LINE VOLTAGE WORK SHALL BE BY ELECTRICIAN.
4. A 120–VOLT SERVICE RECEPTACLE SHALL BE LOCATED WITHIN 25' OF EACH PIECE OF EQUIPMENT. DISCONNECT SHALL BE BY ELECTRICAL CONTRACTOR.
5. PIPE AND DUCT DIMENSIONS SHOWN ARE NOMINAL SIZES.
6. COORDINATE ALL PIPING AND VENTING WITH BELOW GRADE FOUNDATIONS, STRUCTURE, FIRE PROTECTION AND OTHER TRADES.
7. SANITARY WASTE PIPING SHALL BE INSTALLED AT 1/4" PER FOOT SLOPE AWAY FROM FIXTURES UNLESS SHOWN AS OTHERWISE.
8. MAINTAIN 15'–0" MINIMUM DISTANCE BETWEEN OSA INTAKES AND PLUMBING VENTS, EXHAUST AND COMBUSTION AIR OUTLETS.
9. ROOF DRAIN BODIES AND RAINWATER LEADERS SHALL BE INSULATED WITHIN 10' OF THE ROOF DRAINS.

GREASE INTERCEPTOR SCHEDULE – BUILDING B

TAG	MANUFACTURER AND MODEL	APPLICATION	MAX DFU	MAX GPM	MIN CAPACITIES (GAL) LIQUID	GREASE	CONNECTIONS (INCHES) INLET	OUTLET	VENT	WEIGHT LBS	NOTES
GI–1	OLDCASTLE PRECAST	COMMERCIAL KITCHEN	–	–	3,000	VERIFY	6	6	3	–	1, 2

NOTES:
1. INFORMATION IS PROVIDED FOR REFERENCE ONLY, REFER TO CIVIL DRAWINGS FOR FINAL SELECTIONS AND DESIGNS.
2. PROVIDE WITH HIGHWAY RATED COVER FOR INSTALLATION IN THE DRIVE AISLE.

VICINITY MAP

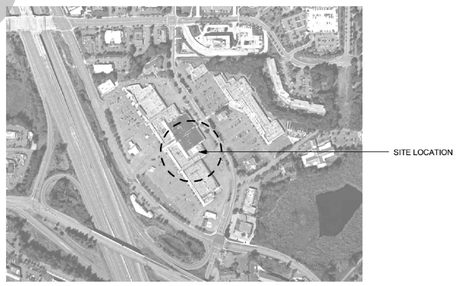

LEGAL DESCRIPTION

XXX

BUILDING OWNER

CENTERCAL PROPERTIES, INC.
1600 EAST FRANKLIN AVENUE
EL SEGUNDO, CA 90245
(310) 563–6900

CONTACT: RICK BEASON OR PATRICK BURNS

BUILDING INFORMATION

ZONING:	COMMERCIAL TL–2
CONSTRUCTION TYPE:	III–A, FULLY SPRINKLERED
OCCUPANCY TYPE:	M – MERCHANTILE
CLIMATE ZONE:	4C KING COUNTY

PLUMBING SCOPE – BUILDING B

SHELL AND CORE PLUMBING WORK TO SUPPORT THE NEW CONSTRUCTION INCLUDING COMMON AREA SERVICES AND CONSULTING FOR ANTICIPATED FUTURE TENANT IMPROVEMENTS, AS FOLLOWS:

- SCHEDULE 40 PVC DRAIN, WASTE AND VENT PIPING WITH 6" MINIMUM WASTE SERVICE TO EACH BUILDING AND 4" MINIMUM WASTE SERVICE TO EACH TENANT
- TYPE K COPPER UNDERGROUND DOMESTIC WATER PIPING WITH 3" MINIMUM SERVICE TO EACH BUILDING AND 1–1/2" MINIMUM SERVICE TO EACH TENANT
- TYPE L COPPER ABOVE GROUND DOMESTIC WATER PIPING WITH 1" MINIMUM INSULATION PER THE OWNER'S CONSTRUCTION STANDARDS
- RECESSED HOSE BIBBS AT EXTERIOR WALLS AND AT ROOF
- CAST IRON ROOF AND CANOPY DRAINS WITH SCHEDULE 40 PVC RAINWATER LEADERS
- LOADING DOCK, TRASH ROOM AND UTILITY ROOM DRAINAGE

AND INCLUDING ALL NECESSARY FITTINGS, VALVES AND RELATED ACCESSORIES TO PROVIDE FOR FUTURE TENANT CONNECTIONS.

TENANT IMPROVEMENT PLUMBING WORK TO SUPPORT THE LANDLORD PROVIDED SYSTEMS AS PER THE INDIVIDUAL TENANTS' LEASE AGREEMENTS INCLUDING:
RESTROOM FIXTURES AND ASSOCIATED PIPING, VALVES AND ACCESSORIES
JANITOR ROOM FIXTURES AND ASSOCIATED PIPING, VALVES AND ACCESSORIES
BREAK ROOM FIXTURES AND ASSOCIATED PIPING, VALVES AND ACCESSORIES

DRAWING INDEX – BUILDING B

SHEET #	SHEET TITLE
P0001B	PLUMBING COVER SHEET
P0002B	PLUMBING SCHEMATIC DIAGRAMS
P1001B	BELOW GRADE PLAN – PLUMBING
P2101B	FIRST FLOOR PLAN – PLUMBING
P2102B	SECOND FLOOR PLAN – PLUMBING
P2801B	ROOF PLAN – PLUMBING

NOT FOR CONSTRUCTION

COPYRIGHT NOTICE
THIS LAYOUT/DESIGN IS AN UNPUBLISHED WORK, AND MERIT MECHANICAL HEREBY RESERVES ITS COMMON LAW RIGHT, PURSUANT TO TITLE 17 SECTION 2 OF THE USA CODE TO PREVENT UNAUTHORIZED COPYING, PUBLICATION OR USE OF THIS DESIGN, AND TO OBTAIN DAMAGES THEREFORE.

THE VILLAGE AT TOTEM LAKE
BUILDING B - LOWER MALL

KIRKLAND, WASHINGTON 98034

COMFORT SYSTEMS USA
Merit Mechanical
9630 153RD AVENUE NE
REDMOND, WA 98052
(425) 883-9224
WA LICENSE: MERITM163CM
WWW.MERITMECHANICAL.COM

REVISIONS
0. FOR REVIEW MAY 16, 2016

DESIGNED: DJH
CHECKED: MTS
DATE: 1-6-2016
JOB NUMBER: 115062
SHEET TITLE: **PLUMBING COVER SHEET**
SHEET NUMBER: P0001B

Merit Mechanical					COMPUTATION SHEET
Redmond, WA					
Job Name:	Retail Shell and Core	**Area Served:**	Whole Building - Public	**Date:**	March 25, 2016
Subject:	Plumbing Fixture Units	**Mark:**	Retail tenant with minimum facilities	**Job No.:**	115062

FIXTURE UNITS

Fixture Number	Fixture Type	No. of Fixtures	WSFU [1]	Total WSFU	CW WSFU [2]	Total CW WSFU	HW WSFU [2]	Total HW WSFU	HW GPH [3]	Total HW GPH	Sewer FU Per Fixture	Total Sewer FU's
	PLUMBING FIXTURES											
	From 2012 UPC Tables											
DF	Drinking Fountain or Water cooler	**1**	0.5	1	0.50	0.50	-	-	-	-	0.5	1
LV	Lavatory	**1**	1	1	0.75	0.75	0.75	0.75	6	6	1	1
SK	Sink, Kitchen, Domestic	**1**	1.5	2	1.13	1.13	1.13	1.13	20	20	2	2
MS	Sink, Service or Mop Basin	**1**	3	3	2.25	2.25	2.25	2.25	20	20	3	3
WC	Water Closet, 1.6 GPF Flush Valve, 1st	**1**	40	40	40.00	40.00	-	-	-	-	4	4
	TOTALS	**5.00**		**46.00**		**44.63**		**4.13**		**46**		**11**

1. Total load on the cold water service, 2012 UPC.
2. Cold and hot water fixture unit value for fixtures having both cold and hot water taken at 75% of the total listed value, 2012 UPC.
3. Values for hot water demand are taken from ASHRAE 2015 HVAC Applications, Chapter 50, Table 10, for Offices.

Total WSFU=	Meter size	Building Supply
46.00	(IN)	(IN)
Per 2012 UPC, max allowable length of 250' and available pressure >60 psi:	1	1 1/2
Per 2012 UPC, max allowable velocity of 8 feet per second:		1 1/4
Per 2012 UPC, minimum horizontal sewer size:		3

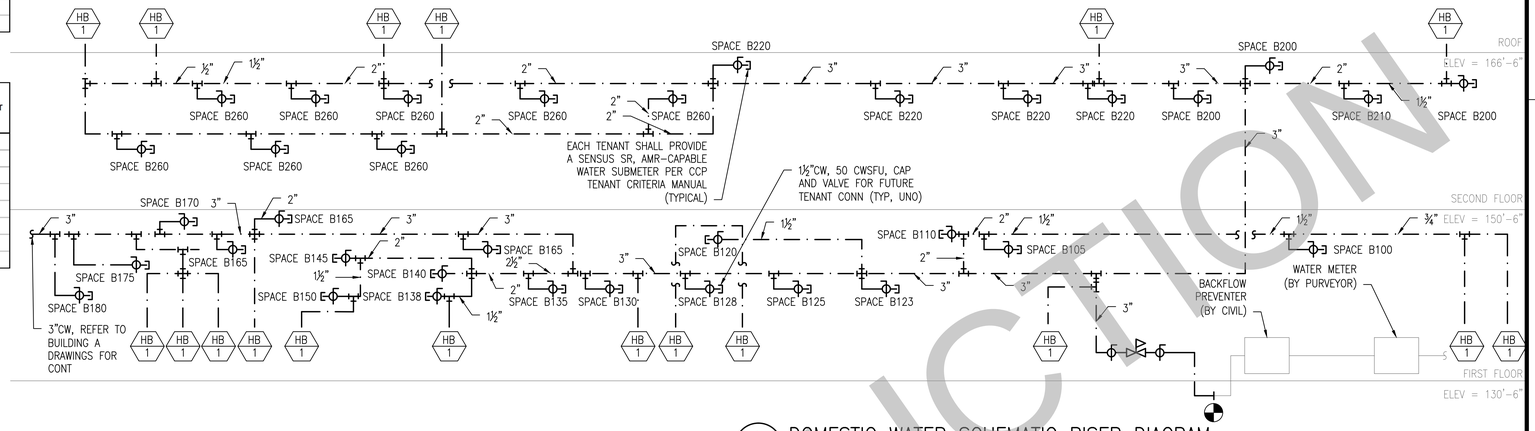

1 P0002B DOMESTIC WATER SCHEMATIC RISER DIAGRAM
SCALE: N/A (DIAGRAMS ARE REFLECTIVE OF THE ORIGINAL DESIGN AND MAY NOT BE REPRESENTATIVE OF AS-BUILT SYSTEMS)

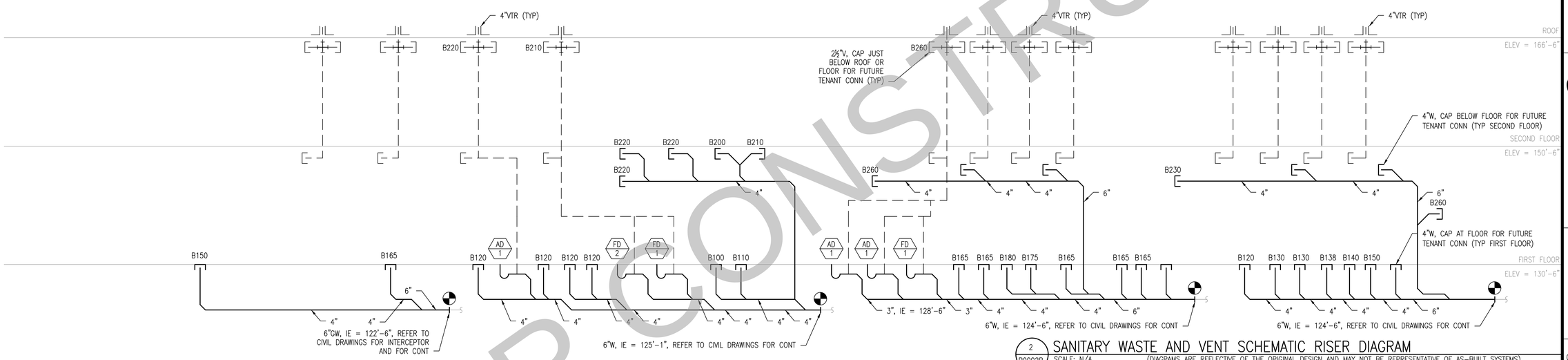

2 P0002B SANITARY WASTE AND VENT SCHEMATIC RISER DIAGRAM
SCALE: N/A (DIAGRAMS ARE REFLECTIVE OF THE ORIGINAL DESIGN AND MAY NOT BE REPRESENTATIVE OF AS-BUILT SYSTEMS)

Merit Mechanical					COMPUTATION SHEET
Redmond, WA					
Job Name:	Retail Shell and Core	**Area Served:**	Whole Building - Public	**Date:**	March 25, 2016
Subject:	Plumbing Fixture Units	**Mark:**	Retail tenant with no more than 2 restrooms	**Job No.:**	115062

FIXTURE UNITS

Fixture Number	Fixture Type	No. of Fixtures	WSFU [1]	Total WSFU	CW WSFU [2]	Total CW WSFU	HW WSFU [2]	Total HW WSFU	HW GPH [3]	Total HW GPH	Sewer FU Per Fixture	Total Sewer FU's
	PLUMBING FIXTURES											
	From 2012 UPC Tables											
OF	Dishwasher, Domestic	**1**	1.5	2	-	-	1.50	1.50	100	100	2	2
DF	Drinking Fountain or Water cooler	**1**	0.5	1	0.50	0.50	-	-	-	-	0.5	1
HB	Hose Bibb, first one	**1**	2.5	2.5	2.50	2.50	-	-	-	-	-	-
HB	Hose Bibb, each additional	**5**	1	5	1.00	5.00	-	-	-	-	-	-
LV	Lavatory	**2**	1	2	0.75	1.50	0.75	1.50	6	12	1	2
SK	Sink, Kitchen, Domestic	**1**	1.5	2	1.13	1.13	1.13	1.13	20	20	2	2
MS	Sink, Service or Mop Basin	**1**	3	3	2.25	2.25	2.25	2.25	20	20	3	3
WC	Water Closet, 1.6 GPF Flush Valve, 1st	**1**	40	40	40.00	40.00	-	-	-	-	4	4
WC	Water Closet, 1.6 GPF Flush Valve, 2nd	**1**	30	30	30.00	30.00	-	-	-	-	4	4
	TOTALS	**14.00**		**86.00**		**82.88**		**6.38**		**152**		**18**

1. Total load on the cold water service, 2012 UPC.
2. Cold and hot water fixture unit value for fixtures having both cold and hot water taken at 75% of the total listed value, 2012 UPC.
3. Values for hot water demand are taken from ASHRAE 2015 HVAC Applications, Chapter 50, Table 10, for Offices.

Total WSFU=	Meter size	Building Supply
86.00	(IN)	(IN)
Per 2012 UPC, max allowable length of 250' and available pressure >60 psi:	1 1/2	1 1/2
Per 2012 UPC, max allowable velocity of 8 feet per second:		1 1/2
Per 2012 UPC, minimum horizontal sewer size:		3

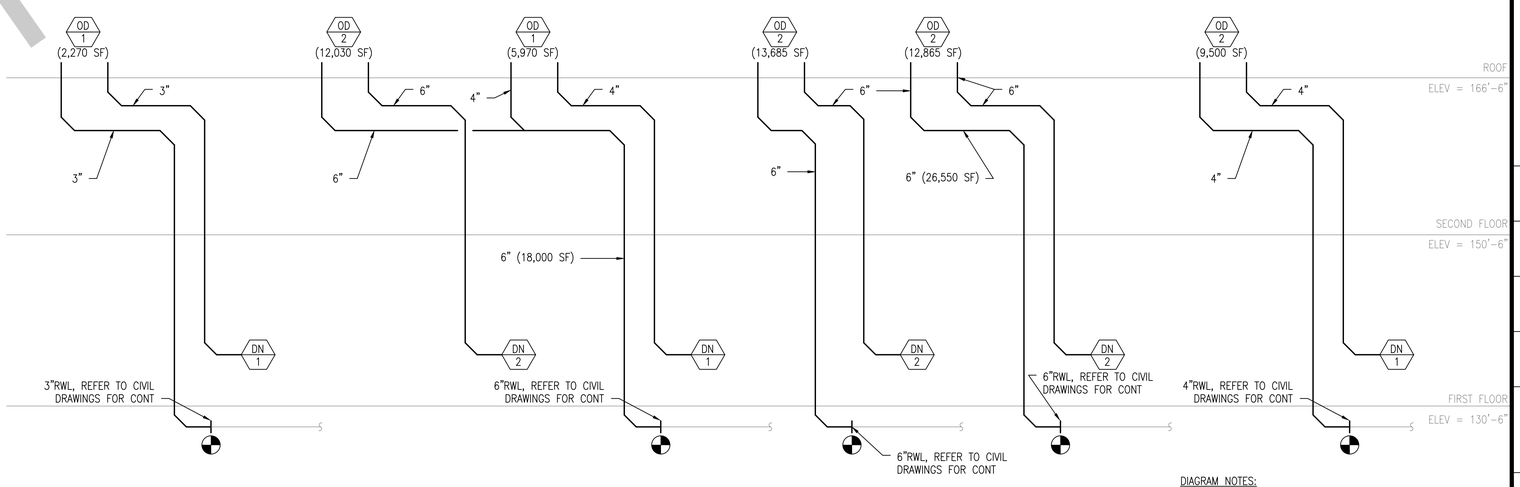

3 P0002B RAIN WATER SCHEMATIC RISER DIAGRAM
SCALE: N/A (DIAGRAMS ARE REFLECTIVE OF THE ORIGINAL DESIGN AND MAY NOT BE REPRESENTATIVE OF AS-BUILT SYSTEMS)

DIAGRAM NOTES:
1. RAINFALL RATES USED FOR ROOF DRAIN AND RAINWATER PIPE SIZES ARE BASED ON 1" PER HOUR PER 2012 UPC, TABLE D 1.1, FOR WASHINGTON STATE.

NOT FOR CONSTRUCTION

COPYRIGHT NOTICE
THIS LAYOUT/DESIGN IS AN UNPUBLISHED WORK, AND MERIT MECHANICAL HEREBY RESERVES ITS COMMON LAW RIGHT, PURSUANT TO TITLE 17 SECTION 2 OF THE USA CODE TO PREVENT UNAUTHORIZED COPYING, PUBLICATION OR USE OF THIS DESIGN, AND TO OBTAIN DAMAGES THEREFORE.

THE VILLAGE AT TOTEM LAKE
BUILDING B - LOWER MALL
KIRKLAND, WASHINGTON 98034

COMFORT SYSTEMS USA
Merit Mechanical
9630 153RD AVENUE NE
REDMOND, WA 98052
(425) 883-9224
WA LICENSE: MERITM163CM
WWW.MERITMECHANICAL.COM

REVISIONS
0. FOR REVIEW MAY 16, 2016

DESIGNED DJH
CHECKED MTS
DATE 1-6-2016
JOB NUMBER 115062
SHEET TITLE **SCHEMATIC DIAGRAMS**
SHEET NUMBER P0002B

NOT FOR CONSTRUCTION

Coordinate all utility connection points with the Civil Plans prepared for both LSM16-02038 and the water and sewer plans prepared for NUD.

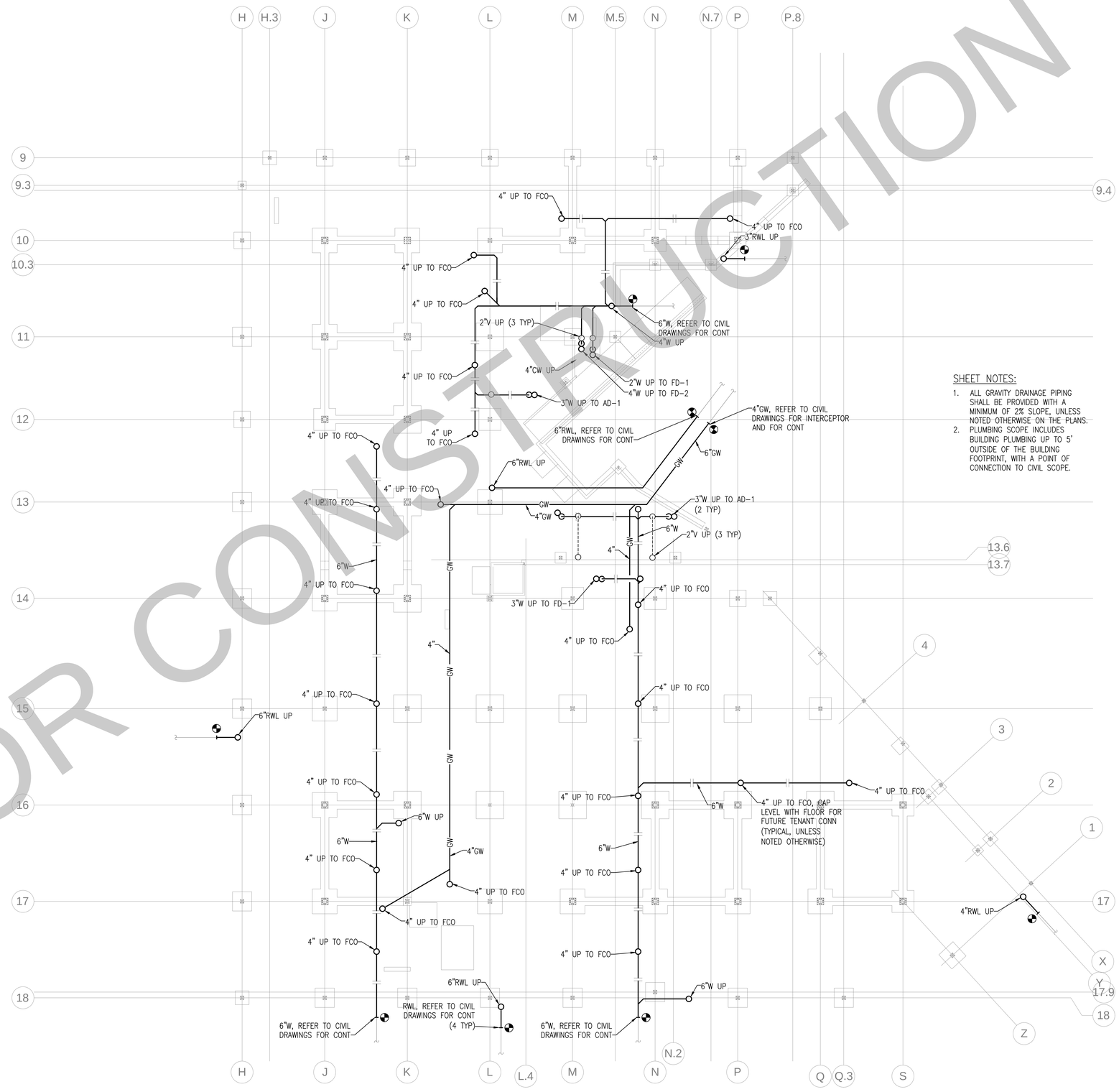

BELOW GRADE PLAN – PLUMBING

SCALE: 1/16" = 1' – 0"

0 8' 16' 32'
SCALE: 1/16" = 1'-0"

SHEET NOTES:

1. ALL GRAVITY DRAINAGE PIPING SHALL BE PROVIDED WITH A MINIMUM OF 2% SLOPE, UNLESS NOTED OTHERWISE ON THE PLANS.
2. PLUMBING SCOPE INCLUDES BUILDING PLUMBING UP TO 5' OUTSIDE OF THE BUILDING FOOTPRINT, WITH A POINT OF CONNECTION TO CIVIL SCOPE.

COPYRIGHT NOTICE

THIS LAYOUT/DESIGN IS AN UNPUBLISHED WORK, AND MERIT MECHANICAL HEREBY RESERVES ITS COMMON LAW RIGHT, PURSUANT TO TITLE 17 SECTION 2 OF THE USA CODE TO PREVENT UNAUTHORIZED COPYING, PUBLICATION OR USE OF THIS DESIGN, AND TO OBTAIN DAMAGES THEREFORE.

THE VILLAGE AT TOTEM LAKE
BUILDING B - LOWER MALL

KIRKLAND, WASHINGTON 98034

COMFORT SYSTEMS USA
Merit Mechanical
9630 153RD AVENUE NE
REDMOND, WA 98052
(425) 883-9224
WA LICENSE: MERITM163CM
WWW.MERITMECHANICAL.COM

REVISIONS
0. FOR REVIEW MAY 16, 2016

DESIGNED
DJH

CHECKED
MTS

DATE
1-6-2016

JOB NUMBER
115062

SHEET TITLE
BELOW GRADE PLAN - PLUMB

SHEET NUMBER
P1001B

SHEET 3 OF 6

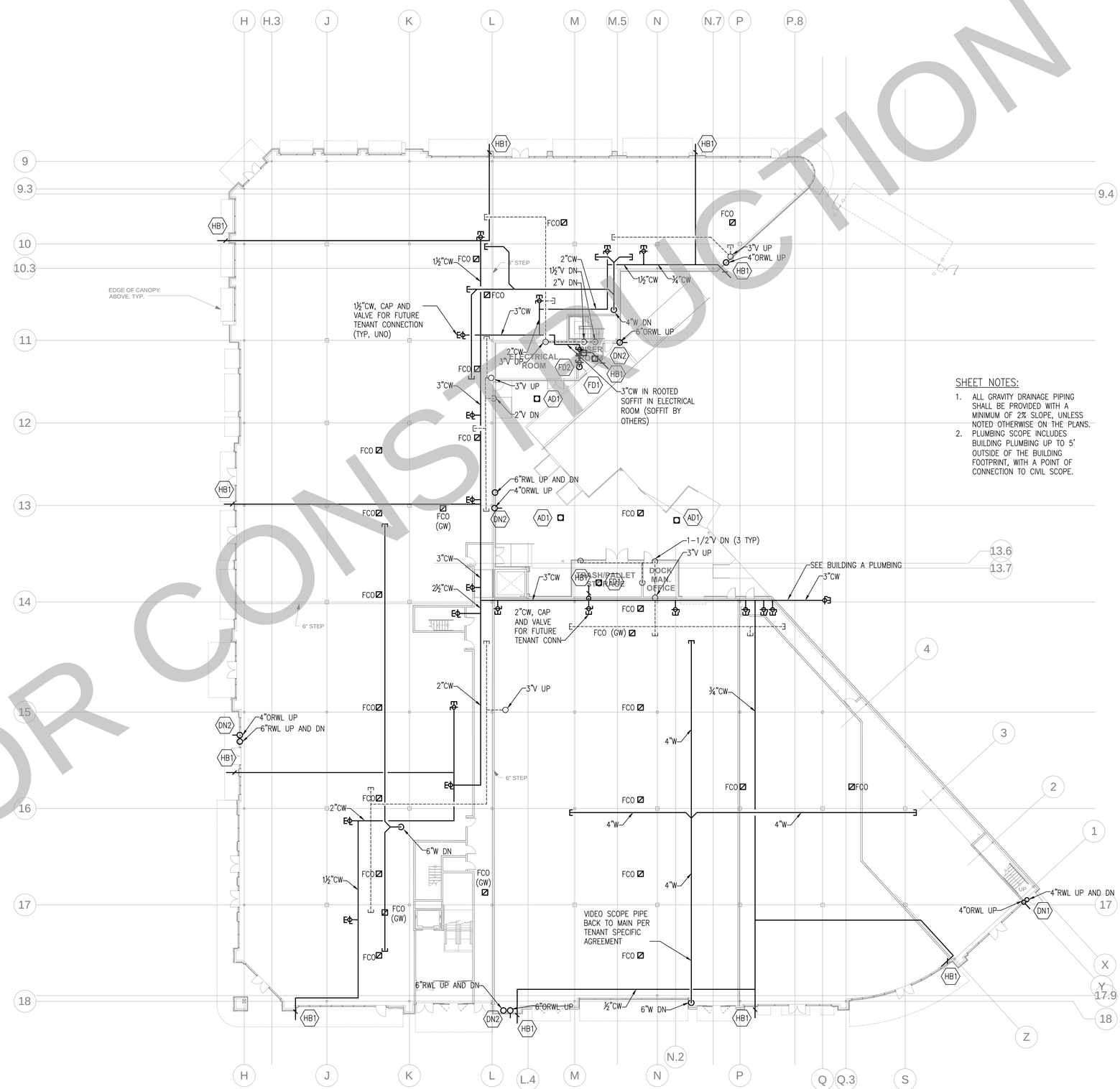

FIRST FLOOR PLAN – PLUMBING

SCALE: 1/16" = 1' – 0"

0 8' 16' 32'
SCALE: 1/16" = 1'-0"

SHEET NOTES:

1. ALL GRAVITY DRAINAGE PIPING SHALL BE PROVIDED WITH A MINIMUM OF 2% SLOPE, UNLESS NOTED OTHERWISE ON THE PLANS.
2. PLUMBING SCOPE INCLUDES BUILDING PLUMBING UP TO 5' OUTSIDE OF THE BUILDING FOOTPRINT, WITH A POINT OF CONNECTION TO CIVIL SCOPE.

NOT FOR CONSTRUCTION

COPYRIGHT NOTICE

THIS LAYOUT/DESIGN IS AN UNPUBLISHED WORK, AND MERIT MECHANICAL HEREBY RESERVES ITS COMMON LAW RIGHT, PURSUANT TO TITLE 17 SECTION 2 OF THE USA CODE TO PREVENT UNAUTHORIZED COPYING, PUBLICATION OR USE OF THIS DESIGN, AND TO OBTAIN DAMAGES THEREFORE.

THE VILLAGE AT TOTEM LAKE
BUILDING B - LOWER MALL

KIRKLAND, WASHINGTON 98034

COMFORT SYSTEMS USA
Merit Mechanical
9630 153RD AVENUE NE
REDMOND, WA 98052
(425) 883-9224
WA LICENSE: MERITM163CM
WWW.MERITMECHANICAL.COM

REVISIONS
0. FOR REVIEW MAY 16, 2016

DESIGNED
DJH

CHECKED
MTS

DATE
1-6-2016

JOB NUMBER
115062

SHEET TITLE
FIRST FLOOR PLAN - PLUMB

SHEET NUMBER
P2101B

SHEET 4 OF 6

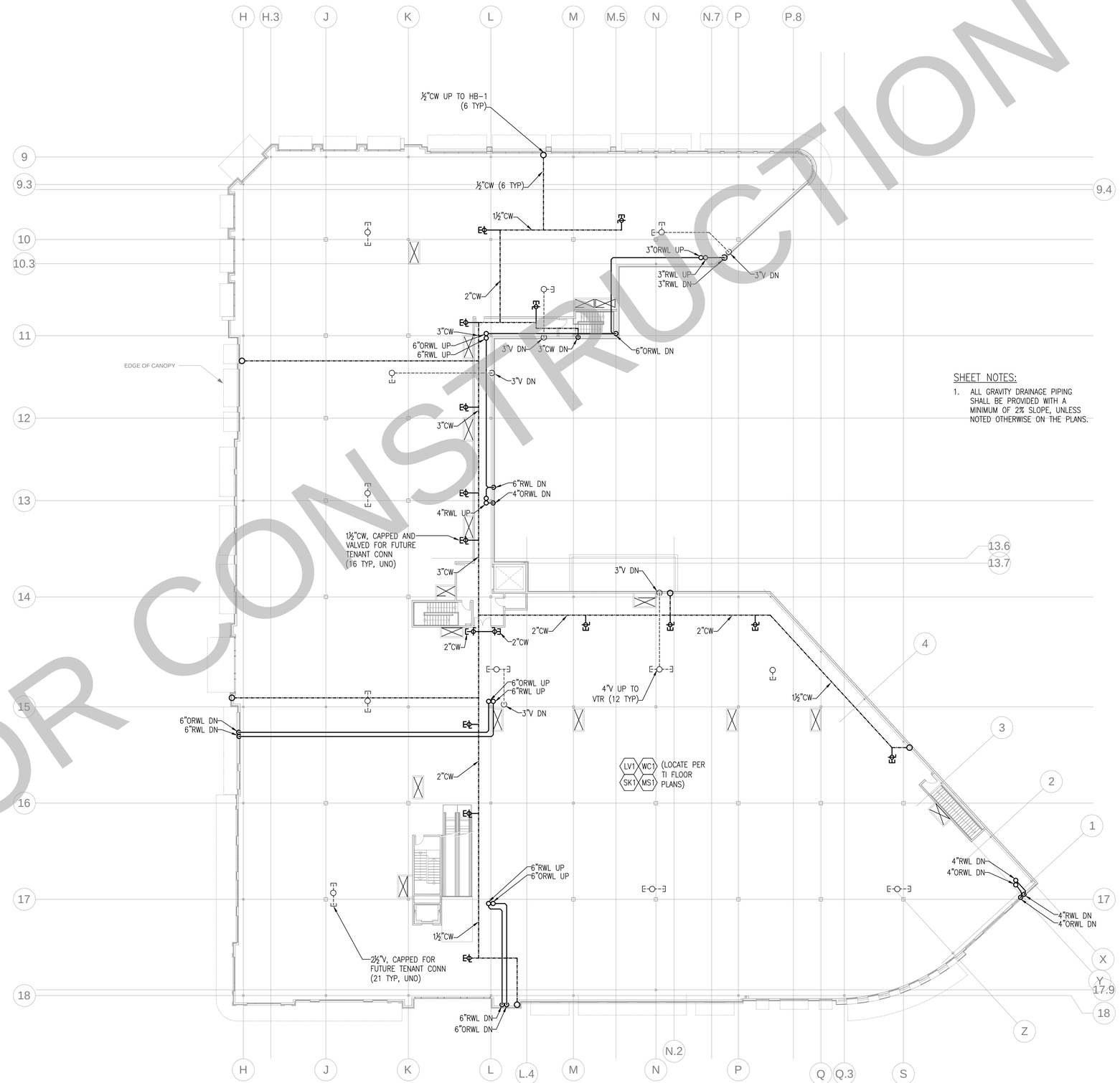

SHEET NOTES:

1. ALL GRAVITY DRAINAGE PIPING SHALL BE PROVIDED WITH A MINIMUM OF 2% SLOPE, UNLESS NOTED OTHERWISE ON THE PLANS.

SECOND FLOOR PLAN – PLUMBING

SCALE: 1/16" = 1' – 0"

0 8' 16' 32'
SCALE: 1/16" = 1'-0"

NOT FOR CONSTRUCTION

COPYRIGHT NOTICE
THIS LAYOUT/DESIGN IS AN UNPUBLISHED WORK, AND MERIT MECHANICAL HEREBY RESERVES ITS COMMON LAW RIGHT, PURSUANT TO TITLE 17 SECTION 2 OF THE USA CODE TO PREVENT UNAUTHORIZED COPYING, PUBLICATION OR USE OF THIS DESIGN, AND TO OBTAIN DAMAGES THEREFORE.

THE VILLAGE AT TOTEM LAKE
BUILDING B - LOWER MALL

KIRKLAND, WASHINGTON 98034

COMFORT SYSTEMS USA
Merit Mechanical
9630 153RD AVENUE NE
REDMOND, WA 98052
(425) 883-9224
WA LICENSE: MERITM163CM
WWW.MERITMECHANICAL.COM

REVISIONS
0. FOR REVIEW MAY 16, 2016

DESIGNED
DJH

CHECKED
MTS

DATE
1-6-2016

JOB NUMBER
115062

SHEET TITLE
SECOND FLOOR PLAN - PLUMB

SHEET NUMBER
P2102B

SHEET 5 OF 6

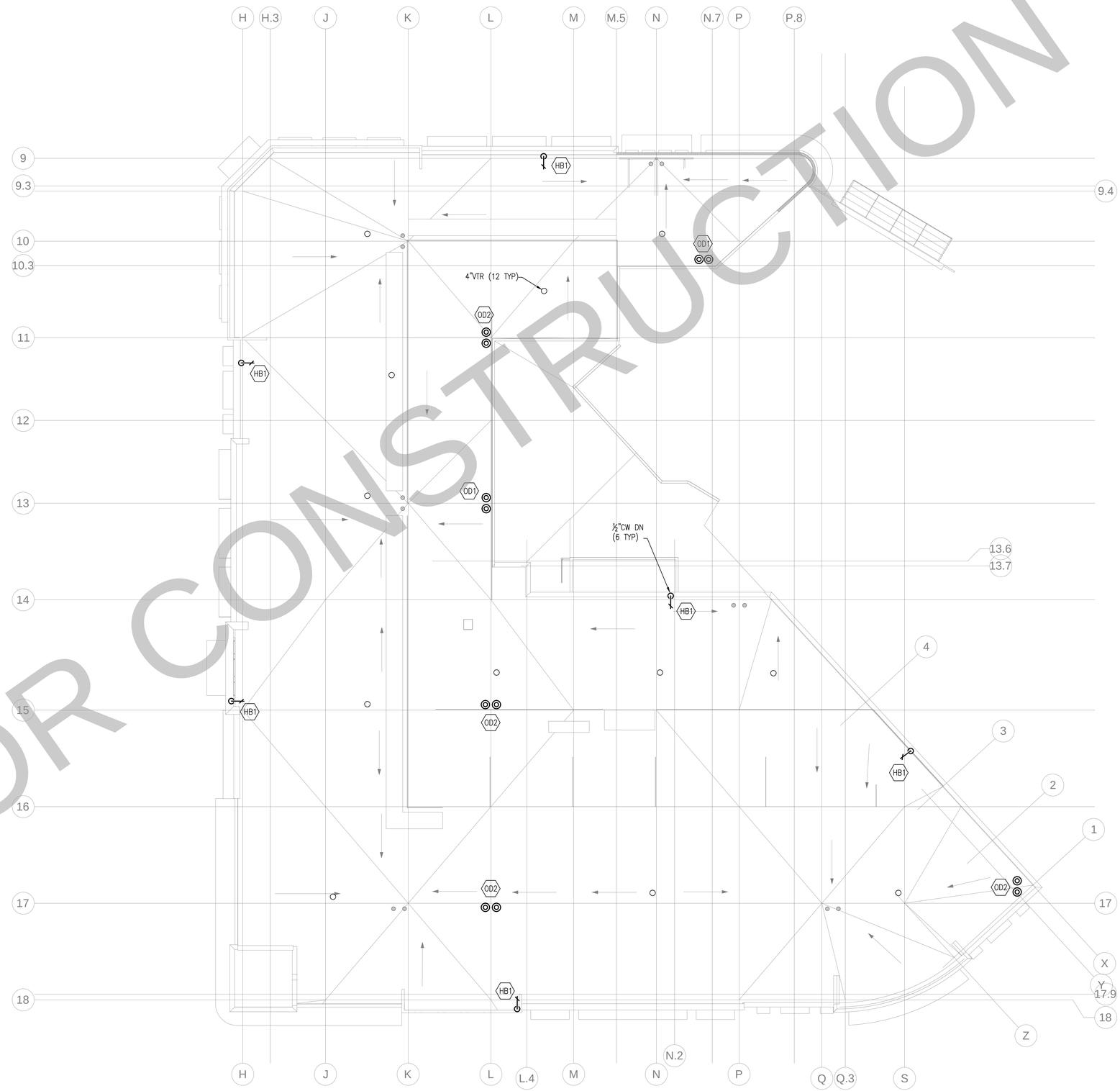

ROOF PLAN – PLUMBING

SCALE: 1/16" = 1' – 0"

0 8' 16' 32'
SCALE: 1/16" = 1'-0"

NOT FOR CONSTRUCTION

COPYRIGHT NOTICE

THIS LAYOUT/DESIGN IS AN UNPUBLISHED WORK, AND MERIT MECHANICAL HEREBY RESERVES ITS COMMON LAW RIGHT, PURSUANT TO TITLE 17 SECTION 2 OF THE USA CODE TO PREVENT UNAUTHORIZED COPYING, PUBLICATION OR USE OF THIS DESIGN, AND TO OBTAIN DAMAGES THEREFORE.

THE VILLAGE AT TOTEM LAKE
BUILDING B - LOWER MALL

KIRKLAND, WASHINGTON 98034

COMFORT SYSTEMS USA
Merit Mechanical
9630 153RD AVENUE NE
REDMOND, WA 98052
(425) 883-9224
WA LICENSE: MERITM163CM
WWW.MERITMECHANICAL.COM

REVISIONS
0. FOR REVIEW MAY 16, 2016

DESIGNED
DJH

CHECKED
MTS

DATE
1-6-2016

JOB NUMBER
115062

SHEET TITLE
ROOF PLAN - PLUMBING

SHEET NUMBER
P2801B

SHEET 6 OF 6

SYMBOLS & ABBREVIATIONS

POWER SYMBOLS

- SINGLE RECEPT.
- DUPLEX RECEPT.
- SWITCHED DUPLEX RECEPT.
- DEDICATED DUPLEX RECEPT.
- ABOVE COUNTER RECEPT.
- GFI RECEPT.
- ABOVE COUNTER GFI RECEPT.
- FOURPLEX RECEPT.
- DEDICATED FOURPLEX RECEPT.
- 240 VOLT RECEPT.
- FLUSH FLOOR RECEPT. (DUPLEX SHOWN)
- FLUSH CEILING MOUNT RECEPT.
- RECEPT ON DROP CORD (DUPLEX SHOWN)
- RECEPT ON CORD REEL (DUPLEX SHOWN)
- EQUIPMENT PLUG
- MULTIOUTLET ASSEMBLY (TYPE DENOTED)
- MULTIOUTLET ASSEMBLY (TYPE DENOTED)
- CLOCK (TYPE DENOTED)
- POWER POLE (OPEN OFFICE STYLE)
- SURGERY SERVICE COLUMN
- GROUND ROD (PLAN VIEW)
- GROUND CONNECTION TO STEEL OR STRUCTURE
- GROUND CONNECTION - EXOTHERMIC WELD
- UTILITY SERVICE POWER POLE (SITE)
- SPECIAL RECEPT. OR CONN. (SEE SCHEDULE)
- SPECIAL CONNECTION (SEE SCHEDULE)
- JUNCTION BOX
- PULL BOX
- CIRCUIT BREAKER PANEL
- POWER OR DISTRIBUTION PANEL
- SPECIAL CABINET (TYPE DENOTED)
- TRANSFORMER (TYPE DENOTED)
- MOTOR (SEE SCHEDULE)
- MAG. MOTOR STARTER OR CONTACTOR
- COMB. MOTOR STARTER (NON-FUSED)
- COMB. MOTOR STARTER (FUSED)
- SAFETY DISC. SW. (NON-FUSED)
- SAFETY DISC. SW. (FUSED)
- BUS DUCT WITH PLUG UN DISCONNECT (FUSED)
- VARIABLE FREQUENCY DRIVE
- RELAY
- ENCLOSED CIRCUIT BREAKER
- HUMIDISTAT
- THERMOSTAT
- WALL HEATER (TYPE DENOTED)
- HAND OR HAIR DRYER (TYPE DENOTED)
- DASHED SYMBOL INDICATES EXISTING
- HATCHED SYMBOL INDICATES REMOVED
- MOMENTARY CONTACT SWITCH
- TIMER SWITCH
- TIME DELAY SWITCH
- FAN SPEED CONTROL
- MOTOR HP. RATED SWITCH
- PUSH BUTTON
- MULTIPLE SERVICE OUTLET
- OUTLET IN FLOOR (MICROPHONE SHOWN)
- MULTIPLE SERVICE FLR OUTLET

LIGHTING SYMBOLS

- SURFACE LIGHT
- WALL MOUNTED FLOODLIGHT
- RECESSED LIGHT
- POLE MOUNTED LIGHT
- POLE MOUNTED FLOODLIGHT
- SURFACE LINEAR LIGHT
- SUSPENDED OR PENDANT LIGHT
- RECESSED LINEAR LIGHT
- STRIP LIGHT
- TRACK AND TRACK LIGHT
- EMERGENCY BATTERY LIGHT
- EXIT SIGN
- LIGHT FIXTURE ON (EM) LIFE SAFETY BRANCH
- LIGHT FIXTURE ON (EM) CRITICAL BRANCH
- LIGHT FIXTURE ON EMERGENCY CIRCUIT
- LIGHT FIXTURE WITH EMERGENCY BALLAST
- SINGLE POLE SW.
- 2 POLE SINGLE THROW SW.
- 3-WAY SW.
- 4-WAY SW.
- KEYED SW.
- DIMMER SWITCH
- OCCUPANCY SENSOR SWITCH
- OCCUPANCY SENSOR - TYPE DENOTED
- LIGHT LEVEL SENSOR - TYPE DENOTED
- TIME CONTROL SWITCH (TIME SWITCH)
- PHOTOCELL

SIGNALS & COMMUNICATION SYMBOLS

- TELEPHONE OUTLET
- WALL TELEPHONE OUTLET
- INFORMATION OUTLET
- INTERCOM OUTLET LOCATION
- TELEVISION OUTLET
- WIRELESS ACCESS POINT
- SPEAKER (WALL OR CEILING MT.)
- HORN TYPE SPEAKER
- VOLUME CONTROL
- MICROPHONE OUTLET
- PROJECTOR CONTROL OUTLET
- KEYED NOTE (SEE SCHEDULE)
- FIRE ALARM HORN
- FIRE ALARM HORN W/STROBE (CANDELAS)
- FIRE ALARM BELL
- FIRE ALARM BELL W/STROBE (CANDELAS)
- FIRE ALARM CHIME
- FIRE ALARM CHIME W/STROBE (CANDELAS)
- FIRE ALARM STROBE (CANDELAS)
- FIRE ALARM SPEAKER W/STROBE (CANDELAS)
- FIRE ALARM REMOTE ANNUNCIATOR
- SMOKE DETECTOR (TYPE DENOTED)
- HEAT DETECTOR (TYPE & TEMP DENOTED)
- F.A. PULLSTATION (TYPE DENOTED)
- F.A. ZONE ADDRESSABLE MODULE
- F.A. INDIVIDUAL ADDRESSABLE MODULE
- F.A. DOOR HOLDER
- F.A. DOOR CLOSER
- FIRE ALARM SHUT DOWN RELAY
- ELECTRIC STRIKE
- MAGNETIC LOCK
- DOOR CONTACTS
- CARD READER
- KEYPAD
- MOTION DETECTOR (TYPE DENOTED)
- CCTV CAMERA
- CCTV CAMERA WITH PAN/TILT DRIVE

CIRCUITRY SYMBOLS

- CONDUIT CONCEALED IN WALL OR OVERHEAD
- CONDUIT CONCEALED BELOW FLOOR
- CONDUIT EXPOSED
- SURFACE RACEWAY
- CONDUIT TRANSITION UP
- CONDUIT TRANSITION DOWN
- CONDUIT STUBBED OUT
- LOW VOLTAGE POWER WIRING
- EXISTING CONDUIT
- UNDERGROUND ELECTRICAL
- UNDERGROUND HIGH VOLTAGE ELECTRICAL
- UNDERGROUND TELEPHONE
- UNDERGROUND COMMUNICATIONS
- UNDERGROUND CABLE TELEVISION
- UNDERGROUND FIBER OPTIC
- OVERHEAD ELECTRIC
- OVERHEAD TELEPHONE
- BRANCH CIRCUIT HOME RUN
- FLEXIBLE CONDUIT OR FIXTURE WHIP
- UNDERFLOOR RACEWAY SYSTEM
- CABLE TRAY
- CONDUIT SLEEVE

MISCELLANEOUS SYMBOLS

- FLAG NOTE
- CENTERLINE
- ELEVATION MARKER
- X - INDICATES DETAIL NUMBER
  X.XX - INDICATES SHEET WHERE DETAIL IS FOUND
  - DIRECTION OF ARROW INDICATES PLAN ORIENTATION IN RELATION TO DETAIL
- XX-X EQUIPMENT IDENTIFIER
- KEY NOTES:

ABBREVIATIONS

A, AMP	AMPERE
AC	INDICATES ABOVE COUNTER MOUNTING AT +4" ABOVE BACKSPLASH OR +6" ABOVE COUNTERS WITHOUT BACKSPLASH.
AFF	ABOVE FINISHED FLOOR
ATS	AUTOMATIC TRANSFER SWITCH
AWG	AMERICAN WIRE GAGE
BTS	BASE TRANSFER STATION
CB	CIRCUIT BREAKER
CKT	CIRCUIT
DED	DEDICATED
DW	DISHWASHER
E	EXISTING
EPO	EMERGENCY POWER OFF
EWC	ELECTRIC WATER COOLER
FA	FIRE ALARM
FBIOC	FURNISHED BY OTHERS INSTALLED BY CONTRACTOR
FI	FILM ILLUMINATOR
G, GND	GROUND
GD	GARBAGE DISPOSAL
GFI, GFCI	GROUND FAULT CIRCUIT INTERRUPTER
HT	HEIGHT
HWT	HOT WATER TANK
IGN	IGNITION
J-BOX	JUNCTION BOX
MW	MICROWAVE - COORDINATE MOUNTING HEIGHT
N	NEUTRAL
NC	NURSE CALL
P	POLE
PH	PHASE
PNL	PANEL
PROVIDE	FURNISH AND INSTALL
R	RELOCATED (INDICATES EXISTING EQUIPMENT TO BE RE-INSTALLED AS SHOWN)
REC	RECEPTACLE
REFER	REFRIGERATOR
RO	RACEWAY ONLY
S	SAFETY TYPE
TELCO	TELEPHONE COMPANY
TELE	TELEPHONE
TR	TELEPHONE RISER
TYP	TYPICAL
UC	UNDERCABINET
V	VOLT
W	WIRE OR WATT
W/O	WITHOUT
WP	WEATHERPROOF

ALL DISTANCES ARE TO CENTER OF DEVICE OR EQUIPMENT UNLESS OTHERWISE NOTED.
DEVICES INDICATED AT 48" MAY NOT BE INSTALLED WITH ANY OPERABLE PART HIGHER THAN 48".
DEVICES MAY BE INSTALLED IN CONCRETE MASONRY UNITS WITH THE TOP OF THE DEVICE AT 48".

* DISTANCE ABOVE TOP OF DOOR FRAME
** DISTANCE TO TOP OF EQUIPMENT OR DEVICE
*** DISTANCE TO HIGHEST OPERABLE PART OF EQUIPMENT
**** DISTANCE BELOW CEILING
***** DISTANCE TO BOTTOM OF DEVICE

NOTES REGARDING DRAWINGS:

THESE DRAWINGS ARE PROVIDED FOR YOUR USE RELATING EXCLUSIVELY TO THE PROJECT CONTAINED HEREIN. SEA-TAC ELECTRIC, INC. PROVIDES THESE DRAWINGS WITH THE FOLLOWING STIPULATIONS:

1. THIS DOCUMENT, AND THE IDEAS AND DESIGNS INCORPORATED HEREIN, AS AN INSTRUMENT OF PROFESSIONAL SERVICE, IS THE PROPERTY OF SEA-TAC ELECTRIC, INC. AND IS NOT TO BE USED, IN WHOLE OR IN PART, FOR ANY OTHER PROJECT WITHOUT THE WRITTEN CONSENT OF SEA-TAC ELECTRIC, INC. THE DESIGNS CONTAINED HEREIN ARE PROTECTED BY THE RULES AND REGULATIONS OF U.S. COPYRIGHT LAWS.
2. THESE DRAWINGS AND DOCUMENTS WERE COPIED FROM COMPUTER DATA CREATED AS A STEP IN THE PRODUCTION OF PHYSICAL DATA FOR THIS PROJECT. THERE MAY BE DISCREPANCIES BETWEEN THESE DOCUMENTS AND THE COMPUTER DATA. WHERE SUCH DISCREPANCIES EXIST, ONLY THE PHYSIAL DOCUMENTS AND DRAWINGS CAN BE RELIED ON TO REFLECT THE WORK OF SEA-TAC ELECTRIC, INC., WHO MAKES NO GUARANTEES OR WARRANTIES REGARDING THESE DOCUMENTS OR THE DATA THEREIN.
3. IN ACCEPTING THESE DOCUMENTS, YOU ASSUME ALL LIABILITY FOR THE ACCUARCY, UTILITY, OR SUITABILITY FOR ANY PRUPOSE FOR ANY DATA THESE DRAWINGS CONTAIN.

COPYRIGHT 2016

GENERAL NOTES:

NOTE:"CONTRACTOR" MEANS "ELECTRICAL CONTRACTOR" WHEN REFERENCED ANYWHERE IN THE ELECTRICAL CONSTRUCTION DOCUMENTS UNLESS WORK AND EQUIPMENT HAS BEEN COORDINATED BETWEEN THE ELECTRICAL AND GENERAL CONTRACTORS TO BE PROVIDED BY THE GENERAL CONTRACTOR. "NEEDED", "PROVIIDE", AND "INSTALL" MEANS ALL ITEMS CALLED OUT IN THE CONTRACT DOCUMENTS AND ANY ADDITIONAL ITEMS NOT CALLED OUT BUT REQUIRED TO MAKE A COMPLETE AND OPERATIONAL SYSTEM.

SCOPE:
THE INTENT OF THE DRAWINGS IS TO PROVIDE A COMPLETE AND FULLY OPERATIONAL ELECTRICAL SYSTEM. THE ELECTRICAL CONTRACTOR SHALL FURNISH AND INSTALL ALL LABOR, MATERIAL AND EQUIPMENT NECESSARY TO COMPLETE THE ELECTRICAL WORK.

PERMITS AND FEES:
THE ELECTRICAL CONTRACTOR SHALL PROCURE AND PAY FOR ALL PERMITS, FEES AND INSPECTIONS NECESSARY TO COMPLETE THE ELECTRICAL SCOPE OF WORK PRIOR TO STARTING THE WORK.

WARRANTY:
THE ELECTRICAL CONTRACTOR SHALL UNCONDITIONALLY WARRANTY ALL WORK TO BE FREE OF DEFECTS IN MATERIAL AND WORKMANSHIP FOR A PERIOD OF ONE (1) YEAR FROM THE DATE OF FINAL ACCEPTANCE BY THE OWNER OR OWNER'S REPRESENTATIVE AND WILL REPAIR OR REPLACE ANY DEFECTIVE WORK PROMPTLY AND WITHOUT CHARGE AND RESTORE ANY OTHER EXISTING WORK DAMAGED IN THE COURSE OF REPAIRING DEFECTIVE MATERIALS AND WORKMANSHIP.

CODES:
PERFORM ALL WORK IN ACCORDANCE WITH THE CURRENT NATIONAL ELECTRICAL CODE, STATES, CITY ELECTRICAL CODES, AND ALL OTHER APPLICABLE CODES INCLUDING ANY STATE OR LOCAL ENERGY CODES. ALL WORK SHALL ALSO BE IN COMPLIANCE WITH BUILDING OWNER'S CRITERIA. IN CASE OF CONFLICT BETWEEN THE DRAWINGS, SPECIFICATIONS, CODES, ORDINANCES, AND AUTHORITIES HAVING JURISDICTION, THE MOST STRINGENT STANDARD (IN THE OPINION OF THE ENGINEER) SHALL APPLY.

STANDARDS:
EQUIPMENT AND MATERIALS SHALL CONFORM WITH APPROPRIATE PROVISIONS OF NEC, WAC, ASTM, UL, ETL, NEMA, ANSI, AND OTHER APPLICABLE AGENCY AS THEY APPLY TO EACH INDIVIDUAL UNIT OR ASSEMBLY.

COPYRIGHT 2016

DRAWING INDEX

E0.01	SYMBOLS AND ABBREVIATIONS
E0.02	ELECTRICAL SCHEDULES
E0.03	ELECTRICAL SCHEDULES
E0.04	ELECTRICAL SCHEDULES
E1.01	ENLARGED ELECTRICAL SITE PLAN
E2.01	LEVEL 1 OVERALL POWER PLAN
E2.02	LEVEL 2 OVERALL POWER PLAN
E2.03	ROOF POWER PLAN
E2.04	LEVEL 1 ENLARGED EAST POWER PLAN
E2.05	LEVEL 1 ENLARGED NORTHWEST POWER PLAN
E2.06	LEVEL 1 ENLARGED SOUTHWEST POWER PLAN
E2.07	LEVEL 2 ENLARGED EAST POWER PLAN
E2.08	LEVEL 2 ENLARGED NORTHWEST POWER PLAN
E2.09	LEVEL 2 ENLARGED SOUTHWEST POWER PLAN
E3.01	LEVEL 1 OVERALL LIGHTING PLAN
E3.02	LEVEL 2 OVERALL LIGHTING PLAN
E3.03	LEVEL 1 ENLARGED EAST LIGHTING PLAN
E3.04	LEVEL 1 ENLARGED NORTHWEST LIGHTING PLAN
E3.05	LEVEL 1 ENLARGED SOUTHWEST LIGHTING PLAN
E3.06	LEVEL 2 ENLARGED EAST LIGHTING PLAN
E3.07	LEVEL 2 ENLARGED NORTHWEST LIGHTING PLAN
E3.08	LEVEL 2 ENLARGED SOUTHWEST LIGHTING PLAN
E4.01	LEVEL 1 MECHANICAL POWER PLAN
E4.02	LEVEL 2 MECHANICAL POWER PLAN
E4.03	ROOF MECHANICAL POWER PLAN
E5.01	ONE-LINE RISER DIAGRAM
E5.02	PANEL SCHEDULES
E6.01	ELECTRICAL DETAILS

60% CD SET

SEA-TAC ELECTRIC INC.
7056 SOUTH 220TH STREET
KENT, WA 98032
PHONE (253) 872-6553
FAX (253) 872-4112
www.seataclectric.com

THE VILLAGE AT TOTEM LAKE - BLDG B
KIRKLAND, WASHINGTON 98034

No.	Description	Date

CENTERCAL PROPERTIES, LLC
1600 EAST FRANKLIN
EL SEGUNDO, CA 90245

SYMBOLS AND ABBREVIATIONS

PROJECT NUMBER	15115
DATE	04/27/2016
DRAWN BY	CM, IE, NP
CHECKED BY	CM

E0.01

SCALE 12" = 1'-0"

C:\Users\ianw\Documents\Totem Lake_Elec_Bldg_B_IanEdmunds.rvt

5/16/2016 3:26:52 PM

VILLAGE AT TOTEM LAKE (BUILDING B) - SERVICE LOAD CALCULATION

SERVICE VOLTAGE ===> 480V 3Ph

BASELINE

SQUARE FOOTAGES	PER FLOOR		# OF...	TOTAL	
B-100 - RETAIL	2267	SQ.FT	1	2267	SQ.FT
B-105 - RETAIL	1560	SQ.FT	1	1560	SQ.FT
B-110 - RETAIL	1375	SQ.FT	1	1375	SQ.FT
B-115 - RETAIL	1986	SQ.FT	1	1986	SQ.FT
B-120 - RETAIL	1498	SQ.FT	1	1498	SQ.FT
B-123 - RETAIL	1402	SQ.FT	1	1402	SQ.FT
B-125 - RETAIL	2462	SQ.FT	1	2462	SQ.FT
B-128 - RETAIL	5000	SQ.FT	1	5000	SQ.FT
B-130 - RETAIL	2657	SQ.FT	1	2657	SQ.FT
B-135 - RETAIL	1280	SQ.FT	1	1280	SQ.FT
B-138 - RETAIL	2700	SQ.FT	1	2700	SQ.FT
B-140 - RETAIL	2799	SQ.FT	1	2799	SQ.FT
B-145 - RETAIL	1293	SQ.FT	1	1293	SQ.FT
B-150 - RETAIL	2461	SQ.FT	1	2461	SQ.FT
B-160 - RETAIL	35013	SQ.FT	1	35013	SQ.FT
B-165 - RETAIL	13263	SQ.FT	1	13263	SQ.FT
B-170 - RETAIL	4978	SQ.FT	1	4978	SQ.FT
B-175 - RETAIL	3968	SQ.FT	1	3968	SQ.FT
			TOTAL BUILDING SQUARE FOOTAGE===>	87,962	SQ.FT

B-100 - RETAIL TENANT GENERAL POWER/LIGHTING

Square Footage Allowances			TOTAL	
B-100 - RETAIL TENANT GENERAL POWER	2	W/sq ft x tenant total sq ft =	4.53	kva
B-100 - RETAIL TENANT GENERAL LIGHTING	1.68	W/sq ft x tenant total sq ft =	3.81	kva
B-100 - RETAIL TENANT GENERAL HVAC	20	W/sq ft x tenant total sq ft =	45.34	kva
		B-100 - RETAIL TENANT GENERAL POWER/LIGHTING LOAD===>	53.68	kva
		=	23.68	w/sq ft

B-105 - RETAIL TENANT GENERAL POWER/LIGHTING

Square Footage Allowances			TOTAL	
B-105 - RETAIL TENANT GENERAL POWER	2	W/sq ft x tenant total sq ft =	3.12	kva
B-105 - RETAIL TENANT GENERAL LIGHTING	1.68	W/sq ft x tenant total sq ft =	2.62	kva
B-105 - RETAIL TENANT GENERAL HVAC	20	W/sq ft x tenant total sq ft =	31.20	kva
		B-105 - RETAIL TENANT GENERAL POWER/LIGHTING LOAD===>	36.94	kva
		=	23.68	w/sq ft

B-110 - RETAIL TENANT GENERAL POWER/LIGHTING

Square Footage Allowances			TOTAL	
B-110 - RETAIL TENANT GENERAL POWER	2	W/sq ft x tenant total sq ft =	2.75	kva
B-110 - RETAIL TENANT GENERAL LIGHTING	1.68	W/sq ft x tenant total sq ft =	2.31	kva
B-110 - RETAIL TENANT GENERAL HVAC	20	W/sq ft x tenant total sq ft =	27.50	kva
		B-110 - RETAIL TENANT GENERAL POWER/LIGHTING LOAD===>	32.56	kva
		=	23.68	w/sq ft

B-115 - RETAIL TENANT GENERAL POWER/LIGHTING

Square Footage Allowances			TOTAL	
B-115 - RETAIL TENANT GENERAL POWER	2	W/sq ft x tenant total sq ft =	3.97	kva
B-115 - RETAIL TENANT GENERAL LIGHTING	1.68	W/sq ft x tenant total sq ft =	3.34	kva
B-115 - RETAIL TENANT GENERAL HVAC	20	W/sq ft x tenant total sq ft =	39.72	kva
		B-115 - RETAIL TENANT GENERAL POWER/LIGHTING LOAD===>	7.31	kva
		=	3.68	w/sq ft

B-120 - RETAIL TENANT GENERAL POWER/LIGHTING

Square Footage Allowances			TOTAL	
B-120 - RETAIL TENANT GENERAL POWER	2	W/sq ft x tenant total sq ft =	3.00	kva
B-120 - RETAIL TENANT GENERAL LIGHTING	1.68	W/sq ft x tenant total sq ft =	2.52	kva
B-120 - RETAIL TENANT GENERAL HVAC	20	W/sq ft x tenant total sq ft =	29.96	kva
		B-120 - RETAIL TENANT GENERAL POWER/LIGHTING LOAD===>	35.47	kva
		=	27.43	w/sq ft

B-123 - RETAIL TENANT GENERAL POWER/LIGHTING

Square Footage Allowances			TOTAL	
B-123 - RETAIL TENANT GENERAL POWER	2	W/sq ft x tenant total sq ft =	2.80	kva
B-123 - RETAIL TENANT GENERAL LIGHTING	1.68	W/sq ft x tenant total sq ft =	2.36	kva
B-123 - RETAIL TENANT GENERAL HVAC	20	W/sq ft x tenant total sq ft =	28.04	kva
		B-123 - RETAIL TENANT GENERAL POWER/LIGHTING LOAD===>	33.20	kva
		=	23.68	w/sq ft

B-125 - RETAIL TENANT GENERAL POWER/LIGHTING

Square Footage Allowances			TOTAL	
B-125 - RETAIL TENANT GENERAL POWER	2	W/sq ft x tenant total sq ft =	4.92	kva
B-125 - RETAIL TENANT GENERAL LIGHTING	1.68	W/sq ft x tenant total sq ft =	4.14	kva
B-125 - RETAIL TENANT GENERAL HVAC	20	W/sq ft x tenant total sq ft =	49.24	kva
		B-125 - RETAIL TENANT GENERAL POWER/LIGHTING LOAD===>	58.30	kva
		=	11.66	w/sq ft

B-128 - RETAIL TENANT GENERAL POWER/LIGHTING

Square Footage Allowances			TOTAL	
B-128 - RETAIL TENANT GENERAL POWER	2	W/sq ft x tenant total sq ft =	10.00	kva
B-128 - RETAIL TENANT GENERAL LIGHTING	1.68	W/sq ft x tenant total sq ft =	8.40	kva
B-128 - RETAIL TENANT GENERAL HVAC	20	W/sq ft x tenant total sq ft =	100.00	kva
		B-128 - RETAIL TENANT GENERAL POWER/LIGHTING LOAD===>	118.40	kva
		=	23.68	w/sq ft

B-130 - RETAIL TENANT GENERAL POWER/LIGHTING

Square Footage Allowances			TOTAL	
B-130 - RETAIL TENANT GENERAL POWER	2	W/sq ft x tenant total sq ft =	5.31	kva
B-130 - RETAIL TENANT GENERAL LIGHTING	1.68	W/sq ft x tenant total sq ft =	4.46	kva
B-130 - RETAIL TENANT GENERAL HAVC	20	W/sq ft x tenant total sq ft =	53.14	kva
		B-130 - RETAIL TENANT GENERAL POWER/LIGHTING LOAD===>	62.92	kva
		=	23.68	w/sq ft

B-135 - RETAIL TENANT GENERAL POWER/LIGHTING

Square Footage Allowances			TOTAL	
B-135 - RETAIL TENANT GENERAL POWER	2	W/sq ft x tenant total sq ft =	2.56	kva
B-135 - RETAIL TENANT GENERAL LIGHTING	1.68	W/sq ft x tenant total sq ft =	2.15	kva
B-135 - RETAIL TENANT GENERAL HVAC	20	W/sq ft x tenant total sq ft =	25.60	kva
		B-135 - RETAIL TENANT GENERAL POWER/LIGHTING LOAD===>	30.31	kva
		=	23.68	w/sq ft

B-138 - RETAIL TENANT GENERAL POWER/LIGHTING

Square Footage Allowances			TOTAL	
B-138 - RETAIL TENANT GENERAL POWER	2	W/sq ft x tenant total sq ft =	5.40	kva
B-138 - RETAIL TENANT GENERAL LIGHTING	1.68	W/sq ft x tenant total sq ft =	4.54	kva
B-138 - RETAIL TENANT GENERAL LIGHTING	20	W/sq ft x tenant total sq ft =	54.00	kva
		B-138 - RETAIL TENANT GENERAL POWER/LIGHTING LOAD===>	63.94	kva
		=	23.68	w/sq ft

B-140 - RETAIL TENANT GENERAL POWER/LIGHTING

Square Footage Allowances			TOTAL	
B-140 - RETAIL TENANT GENERAL POWER	2	W/sq ft x tenant total sq ft =	5.60	kva
B-140 - RETAIL TENANT GENERAL LIGHTING	1.68	W/sq ft x tenant total sq ft =	4.70	kva
B-140 - RETAIL TENANT GENERAL HVAC	20	W/sq ft x tenant total sq ft =	55.98	kva
		B-140 - RETAIL TENANT GENERAL POWER/LIGHTING LOAD===>	66.28	kva
		=	23.68	w/sq ft

B-145 - RETAIL TENANT GENERAL POWER/LIGHTING

Square Footage Allowances			TOTAL	
B-145 - RETAIL TENANT GENERAL POWER	2	W/sq ft x tenant total sq ft =	2.59	kva
B-145 - RETAIL TENANT GENERAL LIGHTING	1.68	W/sq ft x tenant total sq ft =	2.17	kva
B-145 - RETAIL TENANT GENERAL HVAC	20	W/sq ft x tenant total sq ft =	25.86	kva
		B-145 - RETAIL TENANT GENERAL POWER/LIGHTING LOAD===>	30.62	kva
		=	23.68	w/sq ft

B-150 - RETAIL TENANT GENERAL POWER/LIGHTING

Square Footage Allowances			TOTAL	
B-150 - RETAIL TENANT GENERAL POWER	2	W/sq ft x tenant total sq ft =	4.92	kva
B-150 - RETAIL TENANT GENERAL LIGHTING	1.68	W/sq ft x tenant total sq ft =	4.13	kva
B-150 - RETAIL TENANT GENERAL HVAC	20	W/sq ft x tenant total sq ft =	49.22	kva
		B-150 - RETAIL TENANT GENERAL POWER/LIGHTING LOAD===>	58.28	kva
		=	23.68	w/sq ft

B-160 - RETAIL TENANT GENERAL POWER/LIGHTING

Square Footage Allowances			TOTAL	
B-160 - RETAIL TENANT GENERAL POWER	2	W/sq ft x tenant total sq ft =	70.03	kva
B-160 - RETAIL TENANT GENERAL LIGHTING	1.68	W/sq ft x tenant total sq ft =	58.82	kva
B-160 - RETAIL TENANT GENERAL HVAC	20	W/sq ft x tenant total sq ft =	700.26	kva
		B-160 - RETAIL TENANT GENERAL POWER/LIGHTING LOAD===>	829.11	kva
		=	23.68	w/sq ft

B-165 - RETAIL TENANT GENERAL POWER/LIGHTING

Square Footage Allowances			TOTAL	
B-165 - RETAIL TENANT GENERAL POWER	2	W/sq ft x tenant total sq ft =	26.53	kva
B-165 - RETAIL TENANT GENERAL LIGHTING	1.68	W/sq ft x tenant total sq ft =	22.28	kva
B-165 - RETAIL TENANT GENERAL HVAC	20	W/sq ft x tenant total sq ft =	265.26	kva
		B-165 - RETAIL TENANT GENERAL POWER/LIGHTING LOAD===>	314.07	kva
		=	23.68	w/sq ft

B-170 - RETAIL TENANT GENERAL POWER/LIGHTING

Square Footage Allowances			TOTAL	
B-170 - RETAIL TENANT GENERAL POWER	2	W/sq ft x tenant total sq ft =	9.96	kva
B-170 - RETAIL TENANT GENERAL LIGHTING	1.68	W/sq ft x tenant total sq ft =	8.36	kva
B-170 - RETAIL TENANT GENERAL HVAC	20	W/sq ft x tenant total sq ft =	99.56	kva
		B-170 - RETAIL TENANT GENERAL POWER/LIGHTING LOAD===>	117.88	kva
		=	23.68	w/sq ft

B-175 - RETAIL TENANT GENERAL POWER/LIGHTING

Square Footage Allowances			TOTAL	
B-175 - RETAIL TENANT GENERAL POWER	2	W/sq ft x tenant total sq ft =	7.94	kva
B-175 - RETAIL TENANT GENERAL LIGHTING	1.68	W/sq ft x tenant total sq ft =	6.67	kva
B-175 - RETAIL TENANT GENERAL HVAC	20	W/sq ft x tenant total sq ft =	79.36	kva
		B-175 - RETAIL TENANT GENERAL POWER/LIGHTING LOAD===>	93.96	kva
		=	23.68	w/sq ft

MISCELLANEOUS HOUSE/EQUIPMENT LOADS

EQUIPMENT ALLOWANCES DESCRIPTION	HP	V	PH	HP KW	EQUIP KW	EQUIP AMPS	A KW	QTY	NEC DEMAND	NEC REFERENCE	TOTAL	
PASSENGER ELEVATOR	20-	480-	3-	21.40				4	85%	NEC 620-14	72.76	KVA
GARBAGE COMPACTOR	10-	480-	3-	11.10				1	100%		11.10	KVA
RECEYCLE COMPACTOR	3-	480-	3-	3.82				1	100%		3.82	KVA
SPRINKLER HEAT		208-	1-		30			1	100%		30.00	KVA
SITE LIGHTING & POWER		480-	3-			800	665.10...	1	100%		665.11	KVA
										TOTAL MISCELLANEOUS HOUSE/EQUIPMENT LOADS===>	782.79	KVA

HOUSE MECHANICAL/PLUMBING EQUIPMENT LOADS

EQUIPMENT ALLOWANCES DESCRIPTION	HP	V	PH	HP KW	EQUIP KW	EQUIP AMPS	A KW	QTY	NEC DEMAND	NEC REFERENCE	TOTAL	
ENERGY RECOVERY VENTILATOR												
ERV-1		208-	1-			1.8	0.3744	1	100%		0.37	KVA
ERV-2		208-	1-			3.7	0.7696	1	100%		0.77	KVA
ERV-3		208-	1-			3.7	0.7696	1	100%		0.77	KVA
ELECTRIC WALL HEATER												
EWH-1		208-	1-			8.32	1.73056	1	100%		1.73	KVA
EWH-2		208-	1-			8.32	1.73056	1	100%	1-	1.73	KVA
EWH-3		208-	1-			8.32	1.73056	1	100%		1.73	KVA
EWH-4		208-	1-			8.32	1.73056	1	100%		1.73	KVA
EWH-5		208-	1-			8.32	1.73056	1	100%		1.73	KVA
EWH-6		208-	1-			8.32	1.73056	1	100%		1.73	KVA
EWH-7		208-	1-			8.32	1.73056	1	100%	1-	1.73	KVA
EWH-8		208-	1-			8.32	1.73056	1	100%		1.73	KVA
EWH-9		208-	1-			8.32	1.73056	1	100%		1.73	KVA
EWH-10		208-	1-			8.32	1.73056	1	100%		1.73	KVA
EWH-11		208-	1-			8.32	1.73056	1	100%		1.73	KVA
EXHAUST FAN												
EF-1		120-	1-			3.3	0.396	1	100%		0.40	KVA
EF-2		120-	1-			3.3	0.396	1	100%		0.40	KVA
EF-3		120-	1-			5.8	0.696	1	100%		0.70	KVA
HEAT PUMP												
AH-A1	POWERED FROM OUTDOOR							1	100%			KVA
HP-A1		208-	1-			4.5	0.936	1	100%		0.94	KVA
PACKAGED ROOFTOP UNIT												
RTU-A1		480-	3-			13	10.807...	1	100%		10.81	KVA
RTU-A2		480-	3-			11	9.1452...	1	100%	3-	9.15	KVA
RTU-A100A		480-	3-			40	33.255...	1	125%		41.57	KVA
RTU-A100B		480-	3-			40	33.255...	1	100%		33.26	KVA
RTU-A100C		480-	3-			40	33.255...	1	100%		33.26	KVA
RTU-A100D		480-	3-			40	33.255...	1	100%		33.26	KVA
RTU-A100E		480-	3-			40	33.255...	1	100%		33.26	KVA
										TOTAL HOUSE MECHANICAL/PLUMBING EQUIPMENT LOADS===>	217.92	KVA

TOTAL LOAD SUMMARY

BUILDING...		
B-100 - RETAIL TENANT GENERAL POWER/LIGHTING LOAD===>	53.68	KVA
B-105 - RETAIL TENANT GENERAL POWER/LIGHTING LOAD===>	36.94	KVA
B-110 - RETAIL TENANT GENERAL POWER/LIGHTING LOAD===>	32.56	KVA
B-115 - RETAIL TENANT GENERAL POWER/LIGHTING LOAD===>	7.31	KVA
B-120 - RETAIL TENANT GENERAL POWER/LIGHTING LOAD===>	35.47	KVA
B-123 - RETAIL TENANT GENERAL POWER/LIGHTING LOAD===>	33.20	KVA
B-125 - RETAIL TENANT GENERAL POWER/LIGHTING LOAD===>	58.30	KVA
B-128 - RETAIL TENANT GENERAL POWER/LIGHTING LOAD===>	118.40	KVA
B-130 - RETAIL TENANT GENERAL POWER/LIGHTING LOAD===>	62.92	KVA
B-135 - RETAIL TENANT GENERAL POWER/LIGHTING LOAD===>	30.31	KVA
B-138 - RETAIL TENANT GENERAL POWER/LIGHTING LOAD===>	63.94	KVA
B-140 - RETAIL TENANT GENERAL POWER/LIGHTING LOAD===>	66.28	KVA
B-145 - RETAIL TENANT GENERAL POWER/LIGHTING LOAD===>	30.62	KVA
B-150 - RETAIL TENANT GENERAL POWER/LIGHTING LOAD===>	58.28	KVA
B-160 - RETAIL TENANT GENERAL POWER/LIGHTING LOAD===>	829.11	KVA
B-165 - RETAIL TENANT GENERAL POWER/LIGHTING LOAD===>	314.07	KVA
B-170 - RETAIL TENANT GENERAL POWER/LIGHTING LOAD===>	117.88	KVA
B-175 - RETAIL TENANT GENERAL POWER/LIGHTING LOAD===>	93.96	KVA
TOTAL MISCELLANEOUS HOUSE/EQUIPMENT LOADS===>	782.79	KVA
TOTAL HOUSE MECHANICAL/PLUMBING EQUIPMENT LOADS===>	0.00	KVA
TOTAL===>	2826.01	KVA
=	3399.16	A @ 480V

60% CD SET

SEANTAC ELECTRIC INC.
7056 SOUTH 220TH STREET
KENT, WA 98032
PHONE (253) 872-6553
FAX (253) 872-4112
www.seatacelectric.com

THE VILLAGE AT TOTEM LAKE - BLDG B
KIRKLAND, WASHINGTON 98034

No.	Description	Date

CENTERCAL PROPERTIES, LLC
1600 EAST FRANKLIN
EL SEGUNDO, CA 90245

ELECTRICAL SCHEDULES

PROJECT NUMBER	15115
DATE	04/27/2016
DRAWN BY	CM, IE, NP
CHECKED BY	CM

E0.02

SCALE

C:\Users\iane\Documents\Totem Lake_Elec_Bldg_B_IanEdmunds.rvt

5/16/2016 3:26:52 PM

VILLAGE AT TOTEM LAKE - BUILDING "B" - MECHANICAL EQUIPMENT CONNECTION SCHEDULE

ELECTRICAL DATA					INDIVIDUAL EQUIPMENT INFORMATION						MANUFACTURER UNIT INFO		DISCONNECT						
										TOTAL			TYPE		FRAME	FUSE	SUPPLIED BY		ELECT
MARK	AREA SERVED	LOCATION	VOLT	PH	QTY	kva	FLA	HP	FLA	KVA	MCA	MOCP	F/NF	NEMA	SIZE	AMP	ELECT	MECH	NOTES
ENERGY RECOVERY VENTILATOR SCHEDULE																			
ERV 1			208	1	1	0.3744	1.80			0.37	1.8	15	F	1	15	15	X		2
ERV 2			208	1	1	0.7696	3.70			0.77	3.7	15	F	1	15	15	X		2
ERV 3			208	1	1	0.7696	3.70			0.77	3.7	15	F	1	15	15	X		2
ELECTRIC WALL HEATER SCHEDULE																			
EWH 1	RISER ROOM	RISER ROOM	208	1	1	1.73	8.32			1.73	8.32	15	F	1	15	15	X		2
EWH 2	ELECTRICAL ROOM	ELECTRICAL ROOM	208	1	1	1.73	8.32			1.73	8.32	15	F	1	15	15	X		2
EWH 3	TRASH ROOM	TRASH ROOM	208	1	1	1.73	8.32			1.73	8.32	15	F	1	15	15	X		2
EWH 4	DOCK MANAGER'S OFFICE	DOCK MANAGER'S OFFICE	208	1	1	1.73	8.32			1.73	8.32	15	F	1	15	15	X		2
EWH 5	B200 EXIT STAIR	B200 EXIT STAIR	208	1	1	1.73	8.32			1.73	8.32	15	F	1	15	15	X		2
EWH 6	HOUSE CORRIDOR	HOUSE CORRIDOR	208	1	1	1.73	8.32			1.73	8.32	15	F	1	15	15	X		2
EWH 7	B220 EXIT STAIR	B220 EXIT STAIR	208	1	1	1.73	8.32			1.73	8.32	15	F	1	15	15	X		2
EWH 8	B260 EXIT STAIR	B260 EXIT STAIR	208	1	1	1.73	8.32			1.73	8.32	15	F	1	15	15	X		2
EWH 9	HOUSE CORRIDOR	HOUSE CORRIDOR	208	1	1	1.73	8.32			1.73	8.32	15	F	1	15	15	X		2
EWH 10	B260 EXIT STAIR	B260 EXIT STAIR	208	1	1	1.73	8.32			1.73	8.32	15	F	1	15	15	X		2
EWH 11	HOUSE CORRIDOR	HOUSE CORRIDOR	208	1	1	1.73	8.32			1.73	8.32	15	F	1	15	15	X		2
EXHAUST FAN SCHEDULE																			
EF 1	ELECTRICAL ROOM	CEILING	120	1	1	0.396	3.30			0.40	3.3	15					X		1
EF 2	TRASH ROOM	CEILING	120	1	1	0.396	3.30			0.40	3.3	15					X		1
EF 3	TENANT 260 RESTROOM	ROOF	120	1	1			1/4	5.80	0.70	5.8	15					X		1,5
HEAT PUMP SCHEDULE																			
AH 1		WALL	208	1	1														2,3
HP 1		ROOF	208	1	1	0.936	4.50			0.94	4.5	15	F	3R	25	20	X		2,3
POTENTIAL FUTURE PACKAGED ROOFTOP UNIT SCHEDULE																			
RTU B100	TENANT SPACE	ROOF	480	3	1	14.133	17.00			14.13	17	20	F	3R	20	20	X		2,4,5
RTU B105	TENANT SPACE	ROOF	480	3	1	11.639	14.00			11.64	14	20	F	3R	20	20	X		2,4,5
RTU B110	TENANT SPACE	ROOF	480	3	1	10.807	13.00			10.81	13	15	F	3R	20	15	X		2,4,5
RTU B115	TENANT SPACE	ROOF	480	3	1	14.133	17.00			14.13	17	20	F	3R	20	20	X		2,4,5
RTU B120	TENANT SPACE	ROOF	480	3	1	11.639	14.00			11.64	14	20	F	3R	20	20	X		2,4,5
RTU B123	TENANT SPACE	ROOF	480	3	1	10.807	13.00			10.81	13	20	F	3R	20	15	X		2,4,5
RTU B125	TENANT SPACE	ROOF	480	3	1	16.627	20.00			16.63	20	25	F	3R	30	25	X		2,4,5
RTU B128A	TENANT SPACE	ROOF	480	3	1	16.627	20.00			16.63	20	25	F	3R	30	25	X		2,4,5
RTU B128B	TENANT SPACE	ROOF	480	3	1	16.627	20.00			16.63	20	25	F	3R	30	25	X		2,4,5
RTU B130	TENANT SPACE	ROOF	480	3	1	16.627	20.00			16.63	20	25	F	3R	30	25	X		2,4,5
RTU B135	TENANT SPACE	ROOF	480	3	1	10.807	13.00			10.81	13	15	F	3R	20	15	X		2,4,5
RTU B138	TENANT SPACE	ROOF	480	3	1	16.627	20.00			16.63	20	25	F	3R	25	20	X		2,4,5
RTU B140	TENANT SPACE	ROOF	480	3	1	16.627	20.00			16.63	20	25	F	3R	25	20	X		2,4,5
RTU B145	TENANT SPACE	ROOF	480	3	1	10.807	13.00			10.81	13	15	F	3R	20	15	X		2,4,5
RTU B150	TENANT SPACE	ROOF	480	3	1	16.627	20.00			16.63	20	25	F	3R	30	25	X		2,4,5
RTU B165A	TENANT SPACE	ROOF	480	3	1	20.784	25.00			20.78	25	30	F	3R	30	25	X		2,4,5
RTU B165B	TENANT SPACE	ROOF	480	3	1	20.784	25.00			20.78	25	30	F	3R	30	25	X		2,4,5
RTU B165C	TENANT SPACE	ROOF	480	3	1	20.784	25.00			20.78	25	30	F	3R	30	25	X		2,4,5
RTU B165D	TENANT SPACE	ROOF	480	3	1	20.784	25.00			20.78	25	30	F	3R	30	25	X		2,4,5
RTU B170A	TENANT SPACE	ROOF	480	3	1	16.627	20.00			16.63	20	25	F	3R	25	20	X		2,4,5
RTU B170B	TENANT SPACE	ROOF	480	3	1	16.627	20.00			16.63	20	25	F	3R	25	20	X		2,4,5
RTU B175	TENANT SPACE	ROOF	480	3	1	21.615	26.00			21.62	26	30	F	3R	30	30	X		2,4,5
RTU B200A	TENANT SPACE	ROOF	480	3	1	16.627	20.00			16.63	20	25	F	3R	30	20	X		2,4,5
RTU B200B	TENANT SPACE	ROOF	480	3	1	16.627	20.00			16.63	20	25	F	3R	30	20	X		2,4,5
RTU B220A	TENANT SPACE	ROOF	480	3	1	30.262	36.40			30.26	36.4	45	F	3R	50	40	X		2,4,5
RTU B220B	TENANT SPACE	ROOF	480	3	1	30.262	36.40			30.26	36.4	45	F	3R	50	40	X		2,4,5
RTU B220C	TENANT SPACE	ROOF	480	3	1	30.262	36.40			30.26	36.4	45	F	3R	50	40	X		2,4,5
RTU B260A	TENANT SPACE	ROOF	480	3	1	47.388	57.00			47.39	57	70	F	3R	100	70	X		2,4,5
RTU B260B	TENANT SPACE	ROOF	480	3	1	47.388	57.00			47.39	57	70	F	3R	100	70	X		2,4,5
RTU B260C	TENANT SPACE	ROOF	480	3	1	47.388	57.00			47.39	57	70	F	3R	100	70	X		2,4,5
RTU B260D	TENANT SPACE	ROOF	480	3	1	47.388	57.00			47.39	57	70	F	3R	100	70	X		2,4,5

ELECTRICAL NOTES:

1. FOR 120V FANS PROVIDE MOTOR RATED SWITCH FOR LOCAL DISCONNECT WHERE REQUIRED
2. PROVIDE HACR RATED BREAKER AT SERVING PANEL OR FUSED LOCAL DISCONNECT AT EQUIPMENT
3. SINGLE POINT ELECTRICAL CONNECTION; INDOOR UNIT IS POWERED FROM OUTDOOR UNIT.
4. SMOKE DETECTOR PROVIDED BY M.C. INSTALLED BY E.C.
5. PROVIDE 120V, 15A CONNECTION FOR MOTORIZED DAMPER AT BUILDING PENETRATION LOCATIONS.

SEANTAC ELECTRIC INC.
7056 SOUTH 220TH STREET
KENT, WA 98032
PHONE (253) 872-6553
FAX (253) 872-4112
www.seataceelectric.com

THE VILLAGE AT TOTEM LAKE - BLDG B
KIRKLAND, WASHINGTON 98034

No.	Description	Date

CENTERCAL PROPERTIES, LLC
1600 EAST FRANKLIN
EL SEGUNDO, CA 90245

ELECTRICAL SCHEDULES

PROJECT NUMBER	15115
DATE	04/27/2016
DRAWN BY	Author
CHECKED BY	Checker

E0.03

SCALE

60% CD SET

C:\Users\lane\Documents\Totem Lake_Elec_Bldg_B_lanEdmunds.rvt

5/16/2016 3:26:53 PM

VILLAGE AT TOTEM LAKE - LIGHT FIXTURE SCHEDULE

TYPE	MANUFACTURER	SERIES NO. (CATALOG NO.)	VOLT	NO.	TYPE	BALLAST	FIXTURE WATTS	DESCRIPTION
	INTERIOR LIGHTING							
F-11	TO BE DETERMINED *OR APPROVED EQUAL*	TO BE DETERMINED *OR APPROVED EQUAL*	277	2	F32T8	ELECTRONIC <10%THD	58	SURFACE MOUNTED FLUORESCENT STRIP FIXTURE. 48" NOMINAL LENGTH, LOW PROFILE STEEL HOUSING WITH HIGH REFLECTANCE BAKED WHITE ENAMEL FINISH. PROVIDE WITH CHAIN HANGER AND WIREGUARD UNLESS SPECIFIED OTHERWISE.
X-01	LITHONIA *OR APPROVED EQUAL*	EXGLEDELM0 *OR APPROVED EQUAL*	277	1	5W LED	LED DRIVER	5	UNIVERSAL MOUNT LED EXIT SIGN WITH GREEN LETTERS, FACES AND ARROW INDICATORS AS SHOWN ON PLANS. WHITE POLYCARBONATE HOUSING WITH STENCIL FACE. 20-YEAR LED LIFE. INTEGRAL 2-CIRCUIT TRANSFER RELAY & NICAD BATTERY FOR EMERGENCY OPERATION.
	SITE LIGHTING							
F-1	LUMINII *OR APPROVED EQUAL*	KENDO M WET-2900K-MO-S-F-F-SA *OR APPROVED EQUAL*	277	1	3.2W/LF LED	LED DRIVER	3.2W/LF	LED UPLIGHT AT BUILDING CANOPY. UL LISTED FOR WET LOCATION. ELECTRICAL CONTRACTOR TO COORDINATE ALL PARTS AND ACCESSORIES FOR A FULLY OPERABLE LIGHTING SYSTEM.
F-2	SPI *OR APPROVED EQUAL*	SPI-CK-LED-BRONZE-VERIFY (FINISH W/ ARCHITECT)-WIDE FLOOD-3000K-1000-277V *OR APPROVED EQUAL*	277	2	17W LED	LED DRIVER	34	WALL MOUNTED LED UP/DOWN ACCENT LIGHT
F-3	LIMIERE *OR APPROVED EQUAL*	CAMBRIA SERIES 203-CRS-50MR16-12-(VERIFY)-LVR (HEX CELL LOUVER) *OR APPROVED EQUAL*	12	1	10W LED	LED DRIVER	50	BUILDING MOUNTED ADJUSTABLE DOWLIGHT CONCEALED BEHIND CANOPY. ELECTRICAL CONTRACTOR TO PROVIDE 10W SORAA OUTDOOR LED MR16 41 DEGREE, 2700K. 12V TRANSFORMER REQUIRED FOR OPERATION. UL LISTED FOR WET LOCATION.
F-4	SPECTRUM LIGHTING *OR APPROVED EQUAL*	SGE6LEDGV-26W-30K-E2-(COORDINATE)-AR6222GV-SO-277 *OR APPROVED EQUAL*	277	1	26W LED	LED DRIVER	28.6	RECESSED LED DOWNLIGHT AT EXTERIOR CANOPY LOCATIONS. UL LISTED FOR WET LOCATION.
F-5	LUMINII *OR APPROVED EQUAL*	KENDO M WET-2900K-MO-S-F-F-SA *OR APPROVED EQUAL*	277	1	3.2W/LF LED	LED DRIVER	3.2W/LF	LED UNDERBENCH LIGHT. UL LISTED FOR WET LOCATION. ELECTRICAL CONTRACTOR TO COORDINATE ALL PARTS AND ACCESSORIES FOR A FULLY OPERABLE LIGHTING SYSTEM.
F-6	VISION 3 *OR APPROVED EQUAL*	FL12B-BL (VERIFY)-C4-K11-127(51 DEG)-L1-H1-120V *OR APPROVED EQUAL*	120	1	17W	INTEGRAL LED DRIVER	17	STAKE MOUNTED UPLIGHT AT TREES. 3000K, WARM WHITE LED, 17W, 51 DEGREE LED LAMP. UL LISTED FOR WET LOCATION.
F-7	AURORALIGHT *OR APPROVED EQUAL*	TITAN SERIES LSL3-BR-W-WW (2900K)-T/S-DH-BLP *OR APPROVED EQUAL*	12	1	7.5W LED	LED DRIVER	7.5	TREE MOUNTED MOONLIGHTS. SOME LOCATIONS ARE DEPICTED AS HAVING (2) HEADS, THIS IS TO LIMIT THE AMOUNT OF CABLE RUNNING UP TREE. IN THOSE LOCATIONS A TEE CONNECTOR IS REQUIRED. 12V TRANSFORMER REQUIRED FOR OPERATION. UL LISTED FOR WET LOCATION.
F-8	AURORALIGHT *OR APPROVED EQUAL*	CANDELA SERIES *OR APPROVED EQUAL*	12	1	2.5W LED	INTEGRAL LED DRIVER	2.5	CABLE MOUNTED LED STRING LIGHTS. VERIFY FINISH WITH ARCHITECT PRIOR TO ANY PROCUREMENT. APPROXIMATE 3'-0" OC SPACING. ELECTRICAL CONTRACTOR TO COORDINATE MOUNTING DETAIL WITH CABLE. 12V TRANSFORMER REQUIRED FOR OPERATION. UL LISTED FOR WET LOCATION.
F-9	KIM LIGHTING *OR APPROVED EQUAL*	EL218FS/BL3KUV-FH215DB-(VERIFY)-DIM-277-BL-EPT *OR APPROVED EQUAL*	277	1	16W LED	LED DRIVER	16	LED FLOODLIGHT AT SPECIMEN TREES. ELECTRICAL CONTRACTOR TO COORDINATE APPROPRIATE STAKE MOUNTING OPTIONS AS REQUIRED. 3000K WARM WHITE LED, 1300 LUMENS. UL LISTED FOR WET LOCATIONS.
F-10	TO BE DETERMINED *OR APPROVED EQUAL*	TO BE DETERMINED *OR APPROVED EQUAL*	120	1	100W		100	LARGE CUSTOM LANTERNS. MAXIMUM COST ALLOWANCE OF $1200 PER FIXTURE. UL LISTED FOR WET LOCATION.
DF-1	TO BE DETERMINED *OR APPROVED EQUAL*	TO BE DETERMINED *OR APPROVED EQUAL*						3'-0" DECORATIVE EXTERIOR PENDANT AT BUILDING "A" - WHOLE FOODS. MAXIMUM ALLOWANCE OF $2500 FOR FIXTURES. UL LISTED FOR WET LOCATIONS.
DF-2	TO BE DETERMINED *OR APPROVED EQUAL*	TO BE DETERMINED *OR APPROVED EQUAL*						DECORATIVE EXTERIOR SCONCE. MAXIMUM ALLOWANCE OF $2500 FOR FIXTURES. UL LISTED FOR WET LOCATIONS.
DF-3	TO BE DETERMINED *OR APPROVED EQUAL*	TO BE DETERMINED *OR APPROVED EQUAL*						DECORATIVE EXTERIOR SCONCE. MAXIMUM ALLOWANCE OF $2500 FOR FIXTURES. UL LISTED FOR WET LOCATIONS.
PF-1	MCGRAW EDISON *OR APPROVED EQUAL*	GALLEON LED SERIES GLEON-AE-03-LED-E1-SL2-(VERIFY)-30FT SQUARE POLE *OR APPROVED EQUAL*	277	1	105W LED	LED DRIVER	105	30'-0", TYPE 2, LED PARKING FIELD POSTLIGHT.
PF-1A	MCGRAW EDISON *OR APPROVED EQUAL*	GALLEON LED SERIES GLEON-AE-03-LED-E1-SL3-(VERIFY)-30FT SQUARE POLE *OR APPROVED EQUAL*	277	1	105W LED	LED DRIVER	105	30'-0", TYPE 3, LED PARKING FIELD POSTLIGHT.
PF-2	PHILIPS LUMEC *OR APPROVED EQUAL*	CANDELA SERIES - CITY OF KIRKLAND STANDARD CAND2-PC-C-40W42LED4K-R-RR5-277-GNB-SMOOTH-APRU-LBC2 *OR APPROVED EQUAL*	277	1	45W LED	LED DRIVER	45	16'-0" SINGLE HEADED STREETLIGHT - CITY OF KIRKLAND STANDARD 45W LED, 4000K WARK WHITE LED. ELECTRICAL CONTRACTOR TO COORDINATE REQUIRED OPTIONS (GFCI OUTLET, PLANTER SUPPORT, ETC)
PF-2A	PHILIPS LUMEC *OR APPROVED EQUAL*	CANDELA SERIES - CITY OF KIRKLAND STANDARD CAND2-PC-C-65W42LED4K-R-RR5-277-GNB-SMOOTH-APR4U-LBC2 *OR APPROVED EQUAL*	277	2	70W LED	LED DRIVER	140	16'-0" SINGLE HEADED STREETLIGHT - CITY OF KIRKLAND STANDARD (2) 70W LED, 3000K WARK WHITE LED. ELECTRICAL CONTRACTOR TO COORDINATE REQUIRED OPTIONS (GFCI OUTLET, PLANTER SUPPORT, ETC)
PF-3A	MCGRAW EDISON *OR APPROVED EQUAL*	GALLEON LED SERIES GLEON-AE-05-LED-E1-SL3-(VERIFY)-30FT SQUARE POLE *OR APPROVED EQUAL*	277	1	176W LED	LED DRIVER	176	30'-0", TYPE 3, LED PARKING FIELD POSTLIGHT.

GENERAL NOTES

1. ALL INDICATED CATALOG NUMBERS REPRESENT A DESIGN BASIS ONLY AND CORRESPOND TO THE LISTED MANUFACTURERS SERIES NUMBER. ALL OPTIONS, ACCESSORIES AND/OR FIXTURE COMPONENTS MAY NOT BE REFLECTED IN THIS NUMBER AND CONTRACTOR RESPONSIBLE FOR PROVIDING ALL SUCH ITEMS DISCLOSED IN FIXTURE DESCRIPTION AND/OR SPECIFICATIONS. SUBSTITUTION OF FIXTURE TYPES WILL ONLY BE ACCEPTED IF PHOTOMETRICS, CONSTRUCTION/COMPONENT QUALITY AND DESIGN INTEGRITY ARE SHOWN TO BE EQUAL TO THE DESIGN INTENT. FINAL DISCRETION TO BE DETERMINED BY ENGINEER. ALL SUBSTITUTIONS SHALL INCLUDE PHOTOMETRICS AND BE RECEIVED (5) BUSINESS DAYS PRIOR TO CLOSING FOR ENGINEERING ANALYSIS
2. PROVIDE COLD WEATHER BALLASTS FOR ALL OUTDOOR FIXTURES.
3. ALL FLUORESCENT AND HID LIGHTING FIXTURES SHALL BE PROVIDED WITH IN-LINE GLR FUSE.
4. CONTRACTOR TO VERIFY CEILING CONDITIONS FOR PROPER MOUNTING HARDWARE
5. WHERE FIXTURES ARE SHOWN SHADED PROVIDE BATTERY BALLAST WITH REMOTE TEST BUTTON.

LIGHTING TAKEOFF

TYPE	COUNT	DESCRIPTION
DF-3	10	DECORATIVE SCONCE
F-1	503	WET LISTED LINEAR LED UPLIGHT AT CANOPY. TAPE LIGHT @ 3.2W L/FT
F-2	10	WALL MOUNTED LED UP/DOWN ACCENT FIXTURE.
F-3	16	BUILDING MOUNTED ADJUSTABLE DOWNLIGHT CONCEALED BEHIND CANOPY
F-4	35	RECESSED LED DOWNLIGHT - EXTERIOR CANOPY
F-11	45	4'-0" STRIP (2)LAMP F32T8
X-01	6	EXIT

60% CD SET

SEANTAC ELECTRIC INC.
7056 SOUTH 220TH STREET
KENT, WA 98032
PHONE (253) 872-6553
FAX (253) 872-4112
www.seatacelectric.com

THE VILLAGE AT TOTEM LAKE - BLDG B
KIRKLAND, WASHINGTON 98034

No.	Description	Date

CENTERCAL PROPERTIES, LLC
1600 EAST FRANKLIN
EL SEGUNDO, CA 90245

ELECTRICAL SCHEDULES

PROJECT NUMBER	15115
DATE	04/27/2016
DRAWN BY	Author
CHECKED BY	Checker

E0.04

SCALE

C:\Users\sane\Documents\Totem Lake_Elec_Bldg_B_JanEdmunds.rvt

5/16/2016 3:26:53 PM

GENERAL NOTES

1. MULTI-WIRE BRANCH CIRCUITS SHALL MEET NEC 210.4 REQUIREMENTS.
2. COLOR OF ALL WIRING DEVICES AND COVER PLATES SHALL BE AS SELECTED BY THE ARCHITECT, U.N.O.. VERIFY WITH ARCHITECT PRIOR TO ORDERING
3. EQUIPMENT SHOWN IN BOLD IS NEW.
4. EQUIPMENT SHOWN IN DASHED IS EXISTING.

KEYNOTES

1 REFER TO NEC CODE 110.26 FOR ELECTRICAL ROOM WORKING SPACE CONDITIONS WITH GEAR EXCEEDING 1200 AMPS.

2 SEA-TAC ELECTRIC TO PROVIDE 8' X 4' TELE/DATA BACKBOARD AND RECEPTACLE. ALL TRENCHING, CONDUITS AND CONNECTIONS FROM TELE/DATA BACK BOARD TO TELEPHONE COMPANY FACILITIES TO BE PROVIDED BY WAVE.

3 ELECTRICAL CONTRACTOR TO PROVIDE TRADER JOE'S WITH 2" CONDUIT AND PULL STRING, CAT-5 25 PAIR FROM TELE/DATA BACKBOARD TO TENANT SPACE.

4 ELECTRICAL CONTRACTOR TO PROVIDE NORDSTROMS WITH 2" CONDUIT AND PULL STRING, CAT-5 50 PAIR FROM TELE/DATA TO TENANT SPACE.

5 PROVIDE 2" CHASE TO TRADER JOE'S AND NORDSTROM RACK FOR FIRE ALARM. PROVIDE 1" CHASE TO ALL OTHER TENANTS FOR FIRE ALARM.

6 ELECTRICAL CONTRACTOR TO PROVIDE TRADER JOE'S WITH 2" CHASE TO ROOF FOR FUTURE TELE/DATA.

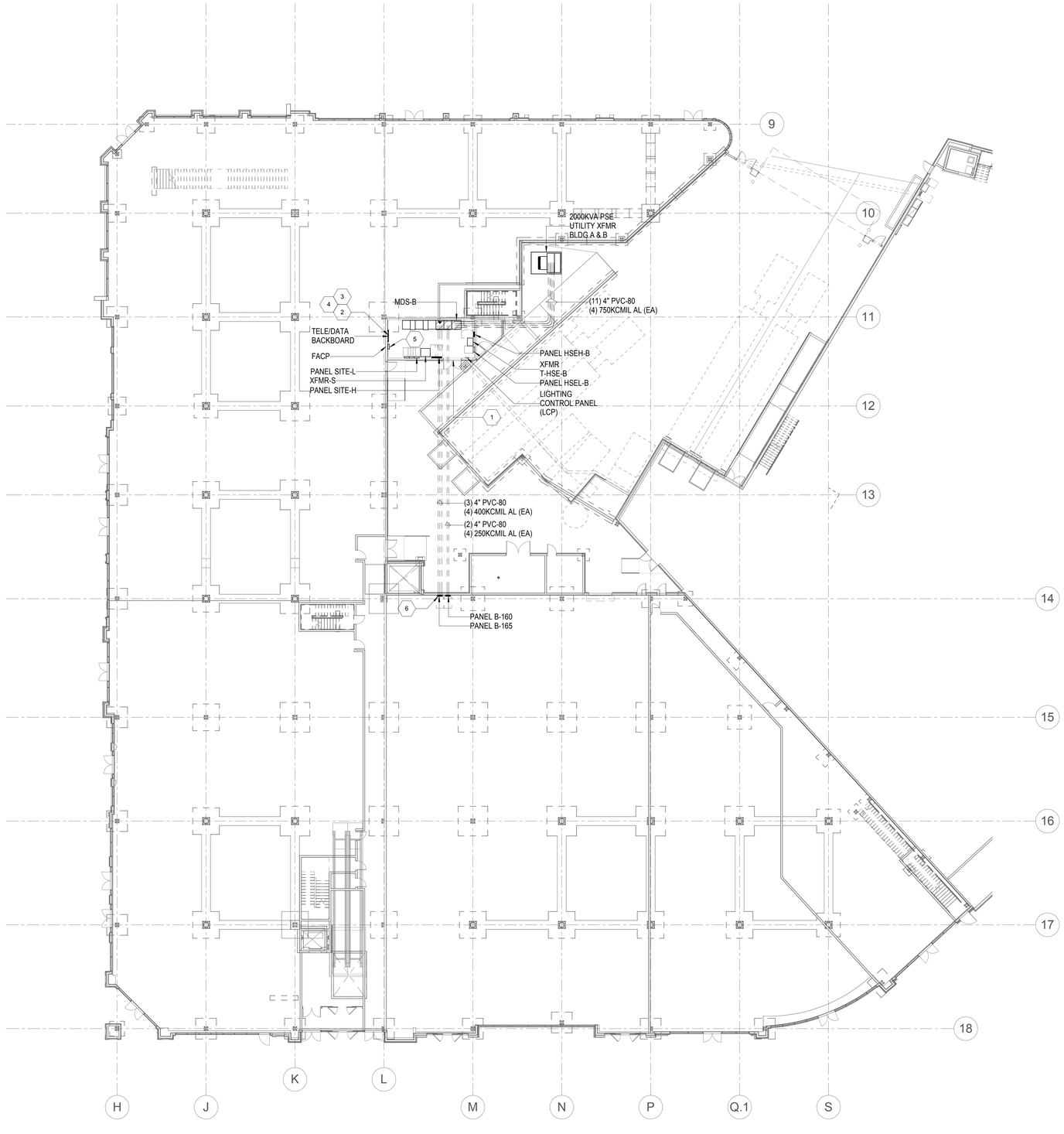

SITE ENLARGED POWER PLAN

1/16" = 1'-0"

SEA-TAC ELECTRIC INC.
7056 SOUTH 220TH STREET
KENT, WA 98032
PHONE: (253) 872-5553
FAX: (253) 872-4112
www.seatacelectric.com

THE VILLAGE AT TOTEM LAKE - BLDG B
KIRKLAND, WASHINGTON 98034

No.	Description	Date

CENTERCAL PROPERTIES, LLC
1600 EAST FRANKLIN
EL SEGUNDO, CA 90245

ENLARGED ELECTRICAL SITE PLAN

PROJECT NUMBER	15115
DATE	04/27/2016
DRAWN BY	CM, IE, NP
CHECKED BY	CM

E1.01

SCALE 1/16" = 1'-0"

60% CD SET

C:\Users\ianw\Documents\Totem Lake_Elec_Bldg_B_IanEdmunds.rvt

5/16/2016 3:26:54 PM

GENERAL NOTES

1. MULTI-WIRE BRANCH CIRCUITS SHALL MEET NEC 210.4 REQUIREMENTS.
2. COLOR OF ALL WIRING DEVICES AND COVER PLATES SHALL BE AS SELECTED BY THE ARCHITECT, U.N.O.. VERIFY WITH ARCHITECT PRIOR TO ORDERING.
3. EQUIPMENT SHOWN BOLD IS NEW.
4. EQUIPMENT SHOWN DASHED IS EXISTING.
5. ITEMS NOTED AS "TYPICAL" ON ANY DRAWING REFERS TO ALL DRAWINGS.
6. PROVIDE NYLON PULL STRING IN ALL EMPTY RACEWAYS.
7. NO STRUCTURAL MEMBERS SHALL BE CUT OR ALTERED WITHOUT PRIOR APPROVAL OF THE ARCHITECT AND STRUCTURAL ENGINEER.
8. LOCATIONS OF ALL MOUNTED DEVICES ARE SHOWN SCHEMATICALLY. COORDINATE WITH THE ARCHITECTURAL DRAWINGS, ELEVATIONS AND CASEWORK SUPPLIERS SHOP DRAWINGS FOR EXACT LOCATION OF DEVICES PRIOR TO ROUGH IN.
9. LOW VOLTAGE WIRING NOT RUN IN A METALLIC RACEWAY SHALL BE PLENUM RATED.
10. EQUIPMENT, LUMINAIRES, RACEWAYS, DEVICES, ETC. SHALL BE UL LISTED.
11. CABLING NOT RUN IN A METALLIC RACEWAY SHALL BE PLENUM RATED.
12. PROVIDE CONDUIT W/ PULL STRING TO EACH TENANT LOCATION.

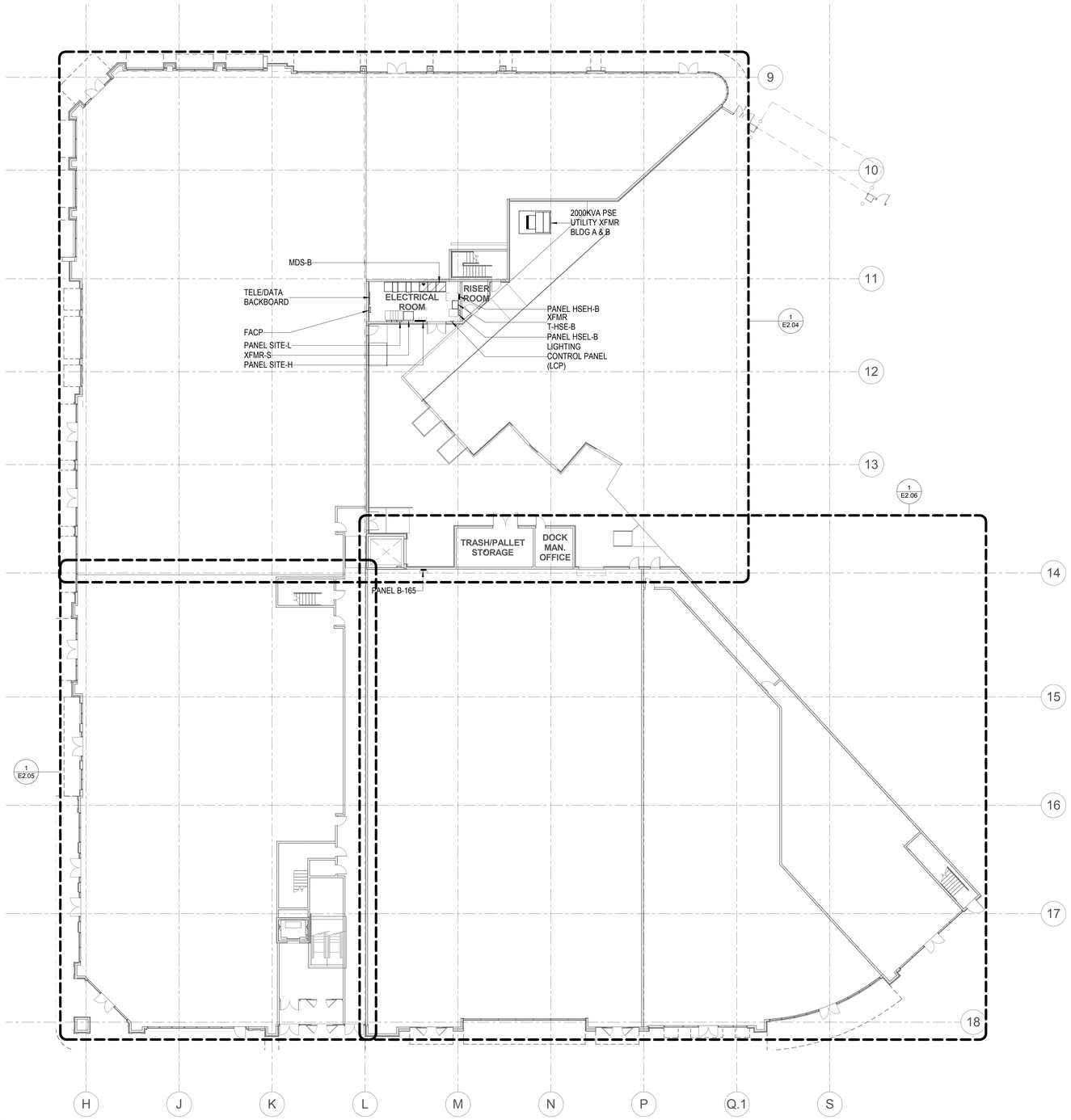

LEVEL 1 OVERALL POWER PLAN

1/16" = 1'-0"

SEATAC ELECTRIC INC.
7056 SOUTH 220TH STREET
KENT, WA 98032
PHONE (253) 872-6553
FAX (253) 872-4112
www.seatacelectric.com

THE VILLAGE AT TOTEM LAKE - BLDG B
KIRKLAND, WASHINGTON 98034

No.	Description	Date

CENTERCAL PROPERTIES, LLC
1600 EAST FRANKLIN
EL SEGUNDO, CA 90245

LEVEL 1 OVERALL POWER PLAN

PROJECT NUMBER	15115
DATE	04/27/2016
DRAWN BY	CM, IE, NP
CHECKED BY	CM

E2.01

SCALE 1/16" = 1'-0"

60% CD SET

C:\Users\iane\Documents\Totem Lake_Elec_Bldg_B_IanEdmunds.rvt

5/16/2016 3:26:55 PM

GENERAL NOTES

1. MULTI-WIRE BRANCH CIRCUITS SHALL MEET NEC 210.4 REQUIREMENTS.
2. COLOR OF ALL WIRING DEVICES AND COVER PLATES SHALL BE AS SELECTED BY THE ARCHITECT, U.N.O.. VERIFY WITH ARCHITECT PRIOR TO ORDERING.
3. EQUIPMENT SHOWN BOLD IS NEW.
4. EQUIPMENT SHOWN DASHED IS EXISTING.
5. ITEMS NOTED AS "TYPICAL" ON ANY DRAWING REFERS TO ALL DRAWINGS.
6. PROVIDE NYLON PULL STRING IN ALL EMPTY RACEWAYS.
7. NO STRUCTURAL MEMBERS SHALL BE CUT OR ALTERED WITHOUT PRIOR APPROVAL OF THE ARCHITECT AND STRUCTURAL ENGINEER.
8. LOCATIONS OF ALL MOUNTED DEVICES ARE SHOWN SCHEMATICALLY. COORDINATE WITH THE ARCHITECTURAL DRAWINGS, ELEVATIONS AND CASEWORK SUPPLIERS SHOP DRAWINGS FOR EXACT LOCATION OF DEVICES PRIOR TO ROUGH IN.
9. LOW VOLTAGE WIRING NOT RUN IN A METALLIC RACEWAY SHALL BE PLENUM RATED.
10. EQUIPMENT, LUMINAIRES, RACEWAYS, DEVICES, ETC. SHALL BE UL LISTED.
11. CABLING NOT RUN IN A METALLIC RACEWAY SHALL BE PLENUM RATED.
12. PROVIDE CONDUIT W/ PULL STRING TO EACH TENANT LOCATION.

KEYNOTES

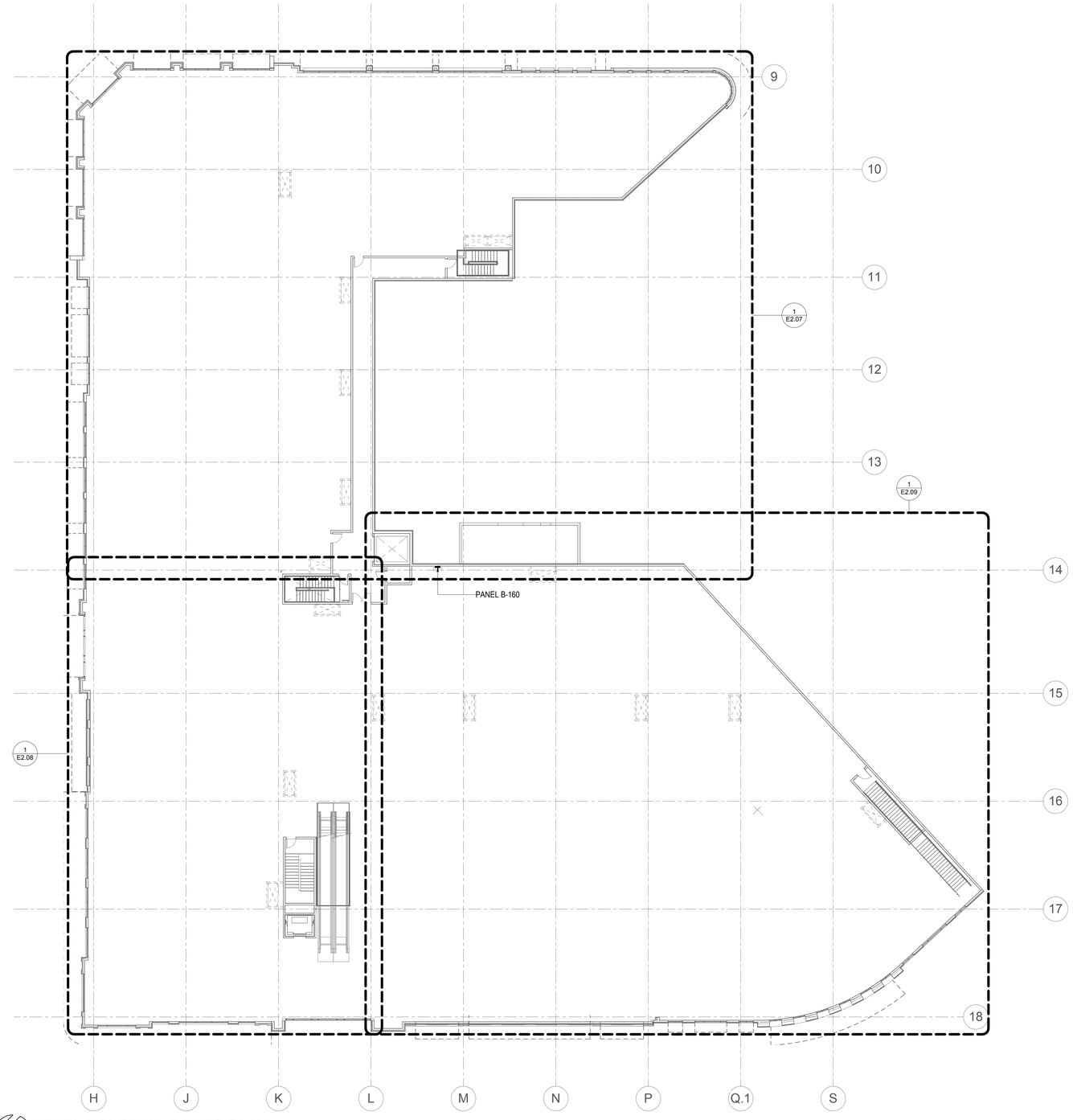

LEVEL 2 OVERALL POWER PLAN

1/16" = 1'-0"

SEATAC ELECTRIC INC.
7056 SOUTH 220TH STREET
KENT, WA 98032
PHONE (253) 872-6553
FAX (253) 872-4112
www.seataclectric.com

THE VILLAGE AT TOTEM LAKE - BLDG B
KIRKLAND, WASHINGTON 98034

No.	Description	Date

CENTERCAL PROPERTIES, LLC
1600 EAST FRANKLIN
EL SEGUNDO, CA 90245

LEVEL 2 OVERALL POWER PLAN

PROJECT NUMBER	15115
DATE	04/27/2016
DRAWN BY	CM, IE, NP
CHECKED BY	CM

E2.02

SCALE 1/16" = 1'-0"

60% CD SET

C:\Users\ianel\Documents\Totem Lake_Elec_Bldg_B_IanEdmunds.rvt

5/16/2016 3:26:56 PM

GENERAL NOTES

1. MULTI-WIRE BRANCH CIRCUITS SHALL MEET NEC 210.4 REQUIREMENTS.
2. COLOR OF ALL WIRING DEVICES AND COVER PLATES SHALL BE AS SELECTED BY THE ARCHITECT, U.N.O.. VERIFY WITH ARCHITECT PRIOR TO ORDERING.
3. EQUIPMENT SHOWN BOLD IS NEW.
4. EQUIPMENT SHOWN DASHED IS EXISTING.
5. ITEMS NOTED AS "TYPICAL" ON ANY DRAWING REFERS TO ALL DRAWINGS.
6. PROVIDE NYLON PULL STRING IN ALL EMPTY RACEWAYS.
7. NO STRUCTURAL MEMBERS SHALL BE CUT OR ALTERED WITHOUT PRIOR APPROVAL OF THE ARCHITECT AND STRUCTURAL ENGINEER.
8. LOCATIONS OF ALL MOUNTED DEVICES ARE SHOWN SCHEMATICALLY. COORDINATE WITH THE ARCHITECTURAL DRAWINGS, ELEVATIONS AND CASEWORK SUPPLIERS SHOP DRAWINGS FOR EXACT LOCATION OF DEVICES PRIOR TO ROUGH IN.
9. LOW VOLTAGE WIRING NOT RUN IN A METALLIC RACEWAY SHALL BE PLENUM RATED.
10. EQUIPMENT, LUMINAIRES, RACEWAYS, DEVICES, ETC. SHALL BE UL LISTED.
11. CABLING NOT RUN IN A METALLIC RACEWAY SHALL BE PLENUM RATED.
12. PROVIDE CONDUIT W/ PULL STRING TO EACH TENANT LOCATION.

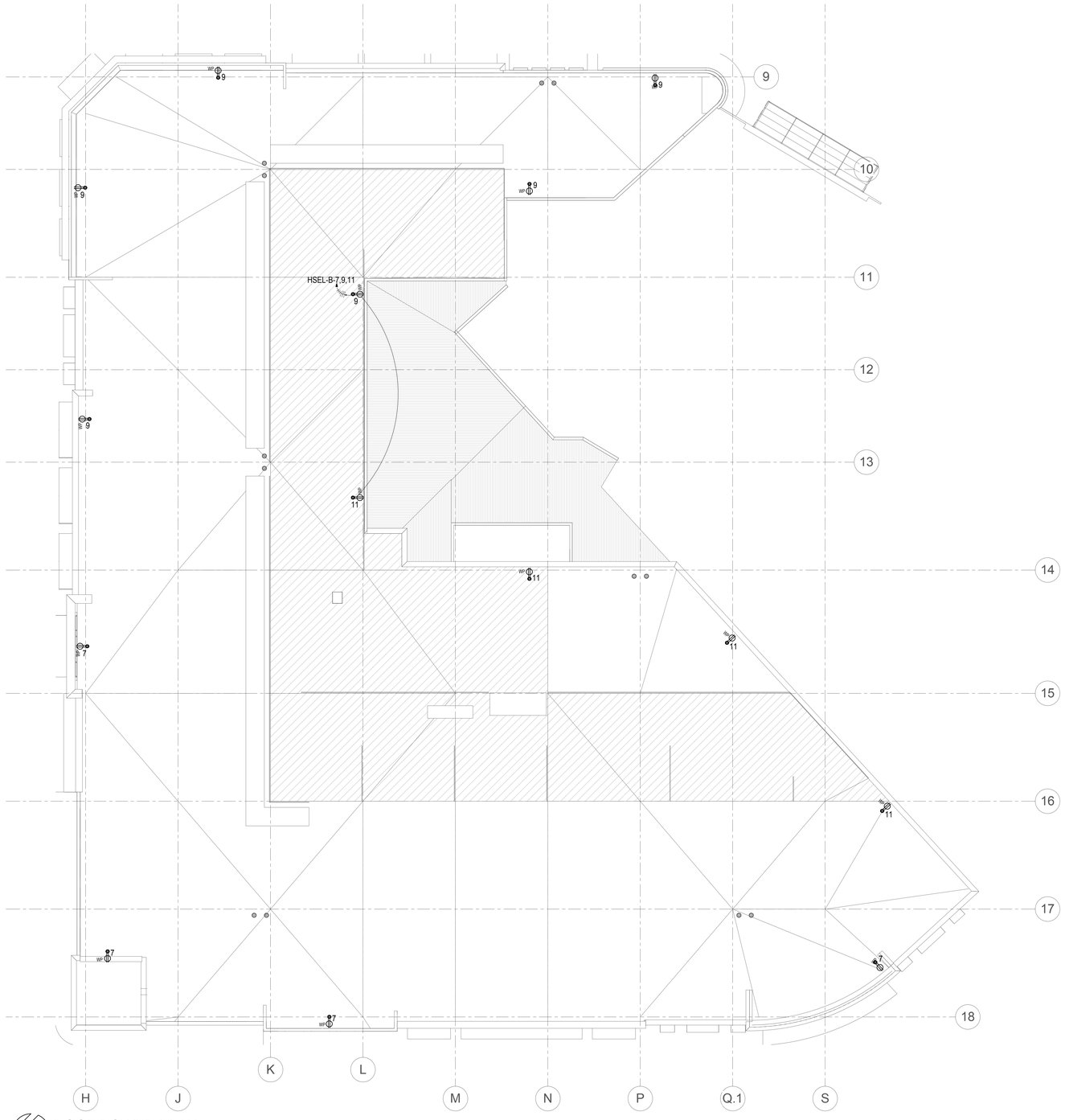

ROOF POWER PLAN
1/16" = 1'-0"

SEATAC ELECTRIC INC.
7056 SOUTH 220TH STREET
KENT, WA 98032
PHONE (253) 872-6553
FAX (253) 872-4112
www.seatacelectric.com

THE VILLAGE AT TOTEM LAKE - BLDG B
KIRKLAND, WASHINGTON 98034

No.	Description	Date

CENTERCAL PROPERTIES, LLC
1600 EAST FRANKLIN
EL SEGUNDO, CA 90245

ROOF POWER PLAN

PROJECT NUMBER	15115
DATE	04/27/2016
DRAWN BY	CM, IE, NP
CHECKED BY	CM

E2.03

SCALE 1/16" = 1'-0"

60% CD SET

C:\Users\ianel\Documents\Totem Lake_Elec_Bldg_B_IanEdmunds.rvt

5/16/2016 3:26:58 PM

GENERAL NOTES

1. MULTI-WIRE BRANCH CIRCUITS SHALL MEET NEC 210.4 REQUIREMENTS.
2. COLOR OF ALL WIRING DEVICES AND COVER PLATES SHALL BE AS SELECTED BY THE ARCHITECT, U.N.O.. VERIFY WITH ARCHITECT PRIOR TO ORDERING.
3. EQUIPMENT SHOWN BOLD IS NEW.
4. EQUIPMENT SHOWN DASHED IS EXISTING.
5. ITEMS NOTED AS "TYPICAL" ON ANY DRAWING REFERS TO ALL DRAWINGS.
6. PROVIDE NYLON PULL STRING IN ALL EMPTY RACEWAYS.
7. NO STRUCTURAL MEMBERS SHALL BE CUT OR ALTERED WITHOUT PRIOR APPROVAL OF THE ARCHITECT AND STRUCTURAL ENGINEER.
8. LOCATIONS OF ALL MOUNTED DEVICES ARE SHOWN SCHEMATICALLY. COORDINATE WITH THE ARCHITECTURAL DRAWINGS, ELEVATIONS AND CASEWORK SUPPLIERS SHOP DRAWINGS FOR EXACT LOCATION OF DEVICES PRIOR TO ROUGH IN.
9. LOW VOLTAGE WIRING NOT RUN IN A METALLIC RACEWAY SHALL BE PLENUM RATED.
10. EQUIPMENT, LUMINAIRES, RACEWAYS, DEVICES, ETC. SHALL BE UL LISTED.
11. CABLING NOT RUN IN A METALLIC RACEWAY SHALL BE PLENUM RATED.
12. PROVIDE CONDUIT W/ PULL STRING TO EACH TENANT LOCATION.

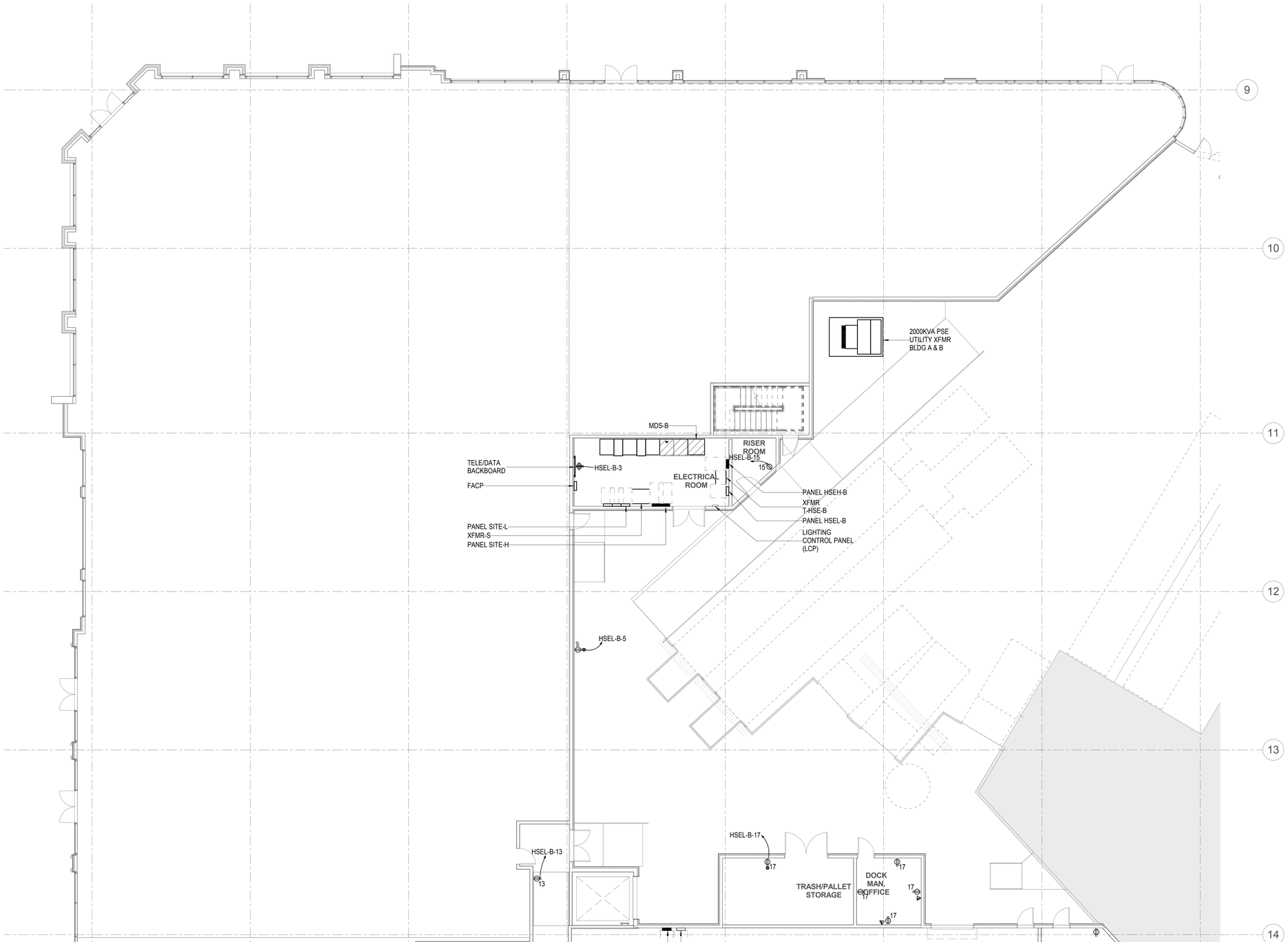

LEVEL 1 ENLARGED EAST POWER PLAN

1/8" = 1'-0"

SEATAC ELECTRIC INC.
7056 SOUTH 220TH STREET
KENT, WA 98032
PHONE (253) 872-6553
FAX (253) 872-4112
www.seataclectric.com

THE VILLAGE AT TOTEM LAKE - BLDG B
KIRKLAND, WASHINGTON 98034

No.	Description	Date

CENTERCAL PROPERTIES, LLC
1600 EAST FRANKLIN
EL SEGUNDO, CA 90245

LEVEL 1 ENLARGED EAST POWER PLAN

PROJECT NUMBER	15115
DATE	04/27/2016
DRAWN BY	CM, IE, NP
CHECKED BY	CM
	E2.04
SCALE	1/8" = 1'-0"

60% CD SET

C:\Users\ianeEdmunds\Documents\Totem Lake_Elec_Bldg_B_IanEdmunds.rvt

5/16/2016 3:26:59 PM

GENERAL NOTES

1. MULTI-WIRE BRANCH CIRCUITS SHALL MEET NEC 210.4 REQUIREMENTS.
2. COLOR OF ALL WIRING DEVICES AND COVER PLATES SHALL BE AS SELECTED BY THE ARCHITECT, U.N.O.. VERIFY WITH ARCHITECT PRIOR TO ORDERING.
3. EQUIPMENT SHOWN BOLD IS NEW.
4. EQUIPMENT SHOWN DASHED IS EXISTING.
5. ITEMS NOTED AS "TYPICAL" ON ANY DRAWING REFERS TO ALL DRAWINGS.
6. PROVIDE NYLON PULL STRING IN ALL EMPTY RACEWAYS.
7. NO STRUCTURAL MEMBERS SHALL BE CUT OR ALTERED WITHOUT PRIOR APPROVAL OF THE ARCHITECT AND STRUCTURAL ENGINEER.
8. LOCATIONS OF ALL MOUNTED DEVICES ARE SHOWN SCHEMATICALLY. COORDINATE WITH THE ARCHITECTURAL DRAWINGS, ELEVATIONS AND CASEWORK SUPPLIERS SHOP DRAWINGS FOR EXACT LOCATION OF DEVICES PRIOR TO ROUGH IN.
9. LOW VOLTAGE WIRING NOT RUN IN A METALLIC RACEWAY SHALL BE PLENUM RATED.
10. EQUIPMENT, LUMINAIRES, RACEWAYS, DEVICES, ETC. SHALL BE UL LISTED.
11. CABLING NOT RUN IN A METALLIC RACEWAY SHALL BE PLENUM RATED.
12. PROVIDE CONDUIT W/ PULL STRING TO EACH TENANT LOCATION.

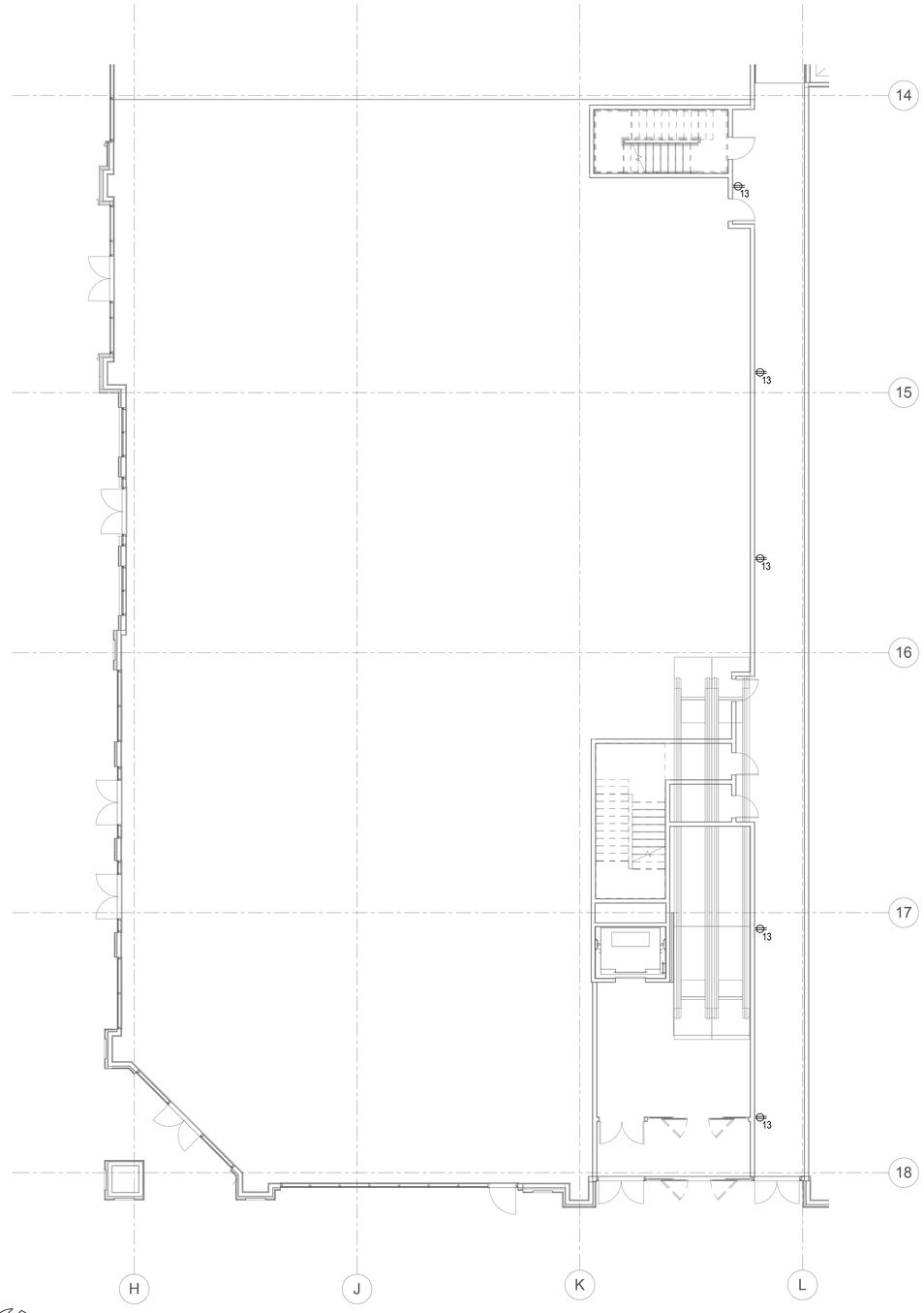

LEVEL 1 ENLARGED NORTHWEST POWER PLAN

1/8" = 1'-0"

SEATAC ELECTRIC INC.
7056 SOUTH 220TH STREET
KENT, WA 98032
PHONE (253) 872-6553
FAX (253) 872-4112
www.seatacelectric.com

THE VILLAGE AT TOTEM LAKE - BLDG B
KIRKLAND, WASHINGTON 98034

No.	Description	Date

CENTERCAL PROPERTIES, LLC
1600 EAST FRANKLIN
EL SEGUNDO, CA 90245

LEVEL 1 ENLARGED NORTHWEST POWER PLAN

PROJECT NUMBER	15115
DATE	04/27/2016
DRAWN BY	CM, IE, NP
CHECKED BY	CM

E2.05

SCALE 1/8" = 1'-0"

60% CD SET

C:\Users\ianel\Documents\Totem Lake_Elec_Bldg_B_IanEdmunds.rvt

5/16/2016 3:27:00 PM

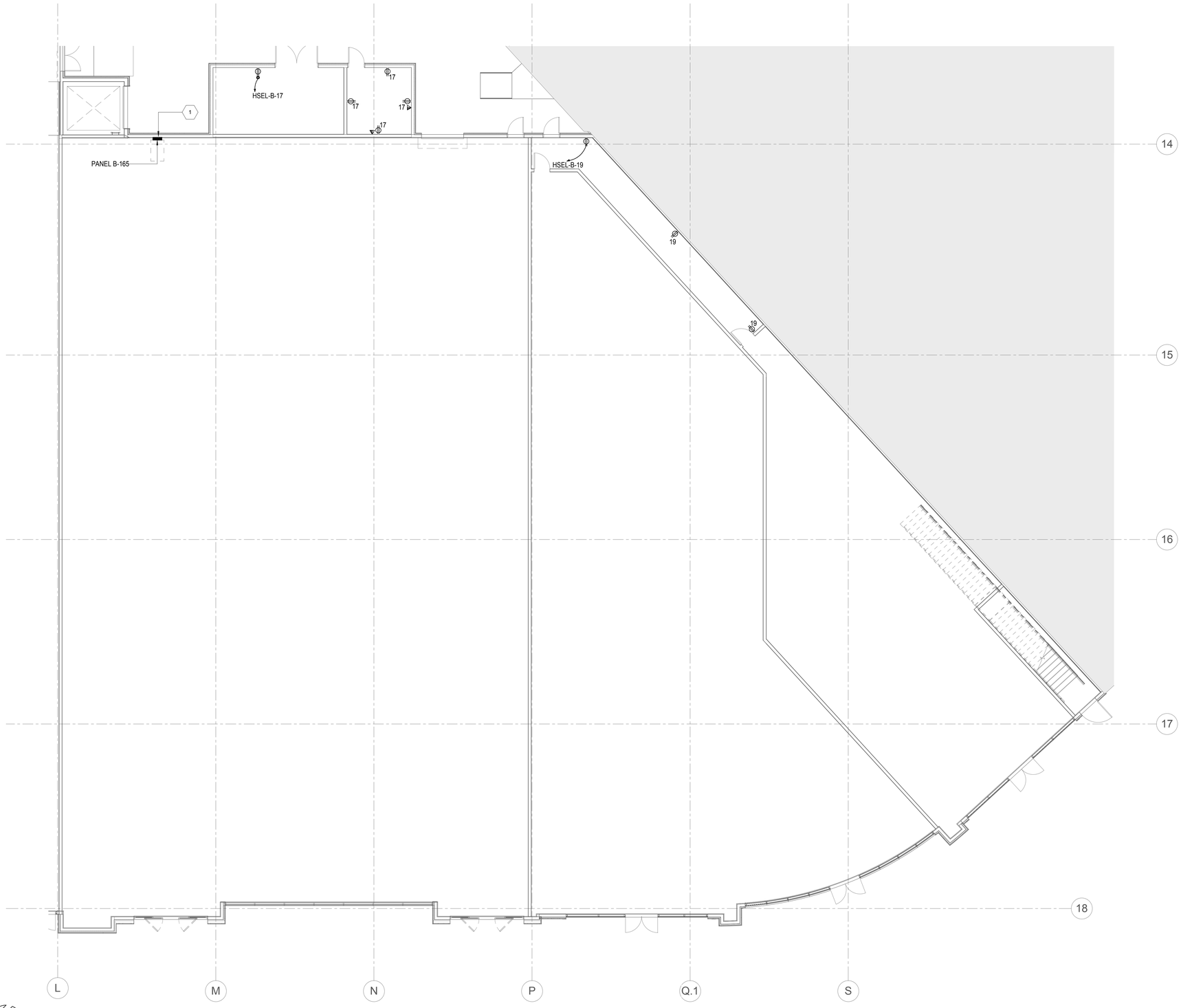

LEVEL 1 ENLARGED SOUTHWEST POWER PLAN

1/8" = 1'-0"

GENERAL NOTES

1. MULTI-WIRE BRANCH CIRCUITS SHALL MEET NEC 210.4 REQUIREMENTS.
2. COLOR OF ALL WIRING DEVICES AND COVER PLATES SHALL BE AS SELECTED BY THE ARCHITECT, U.N.O.. VERIFY WITH ARCHITECT PRIOR TO ORDERING.
3. EQUIPMENT SHOWN BOLD IS NEW.
4. EQUIPMENT SHOWN DASHED IS EXISTING.
5. ITEMS NOTED AS "TYPICAL" ON ANY DRAWING REFERS TO ALL DRAWINGS.
6. PROVIDE NYLON PULL STRING IN ALL EMPTY RACEWAYS.
7. NO STRUCTURAL MEMBERS SHALL BE CUT OR ALTERED WITHOUT PRIOR APPROVAL OF THE ARCHITECT AND STRUCTURAL ENGINEER.
8. LOCATIONS OF ALL MOUNTED DEVICES ARE SHOWN SCHEMATICALLY. COORDINATE WITH THE ARCHITECTURAL DRAWINGS, ELEVATIONS AND CASEWORK SUPPLIERS SHOP DRAWINGS FOR EXACT LOCATION OF DEVICES PRIOR TO ROUGH IN.
9. LOW VOLTAGE WIRING NOT RUN IN A METALLIC RACEWAY SHALL BE PLENUM RATED.
10. EQUIPMENT, LUMINAIRES, RACEWAYS, DEVICES, ETC. SHALL BE UL LISTED.
11. CABLING NOT RUN IN A METALLIC RACEWAY SHALL BE PLENUM RATED.
12. PROVIDE CONDUIT W/ PULL STRING TO EACH TENANT LOCATION.

KEYNOTES

1 PROVIDE THE FOLLOWING POWER, LIGHTING, AND MECHANICAL PROVISIONS FOR (1) MEN'S AND (1) WOMEN'S RESTROOM: (1) GFCI RECEPTACLE, (1) VANITY LIGHT, (1) HAND DRYER, (1) OC SENSOR LIGHT SWITCH, (1) WALL HEATER, AND (1) EXHAUST FAN TO SUPPLY BOTH MEN'S AND WOMEN'S RESTROOMS. CONFIRM LOCATION OF RESTROOM(S) WITH OWNER OR OWNER'S REPRESENTATIVE PRIOR TO ANY ROUGH-IN.

SEATTAC ELECTRIC INC.
7056 SOUTH 220TH STREET
KENT, WA 98032
PHONE (253) 872-6553
FAX (253) 872-4112
www.seattacelectric.com

THE VILLAGE AT TOTEM LAKE - BLDG B
KIRKLAND, WASHINGTON 98034

No.	Description	Date

CENTERCAL PROPERTIES, LLC
1600 EAST FRANKLIN
EL SEGUNDO, CA 90245

LEVEL 1 ENLARGED SOUTHWEST POWER PLAN

PROJECT NUMBER	15115
DATE	04/27/2016
DRAWN BY	CM, IE, NP
CHECKED BY	CM

E2.06

SCALE 1/8" = 1'-0"

60% CD SET

C:\Users\iane\Documents\Totem Lake_Elec_Bldg_B_IanEdmunds.rvt

5/18/2016 3:27:01 PM

GENERAL NOTES

1. MULTI-WIRE BRANCH CIRCUITS SHALL MEET NEC 210.4 REQUIREMENTS.
2. COLOR OF ALL WIRING DEVICES AND COVER PLATES SHALL BE AS SELECTED BY THE ARCHITECT, U.N.O.. VERIFY WITH ARCHITECT PRIOR TO ORDERING.
3. EQUIPMENT SHOWN BOLD IS NEW.
4. EQUIPMENT SHOWN DASHED IS EXISTING.
5. ITEMS NOTED AS "TYPICAL" ON ANY DRAWING REFERS TO ALL DRAWINGS.
6. PROVIDE NYLON PULL STRING IN ALL EMPTY RACEWAYS.
7. NO STRUCTURAL MEMBERS SHALL BE CUT OR ALTERED WITHOUT PRIOR APPROVAL OF THE ARCHITECT AND STRUCTURAL ENGINEER.
8. LOCATIONS OF ALL MOUNTED DEVICES ARE SHOWN SCHEMATICALLY. COORDINATE WITH THE ARCHITECTURAL DRAWINGS, ELEVATIONS AND CASEWORK SUPPLIERS SHOP DRAWINGS FOR EXACT LOCATION OF DEVICES PRIOR TO ROUGH IN.
9. LOW VOLTAGE WIRING NOT RUN IN A METALLIC RACEWAY SHALL BE PLENUM RATED.
10. EQUIPMENT, LUMINAIRES, RACEWAYS, DEVICES, ETC. SHALL BE UL LISTED.
11. CABLING NOT RUN IN A METALLIC RACEWAY SHALL BE PLENUM RATED.
12. PROVIDE CONDUIT W/ PULL STRING TO EACH TENANT LOCATION.

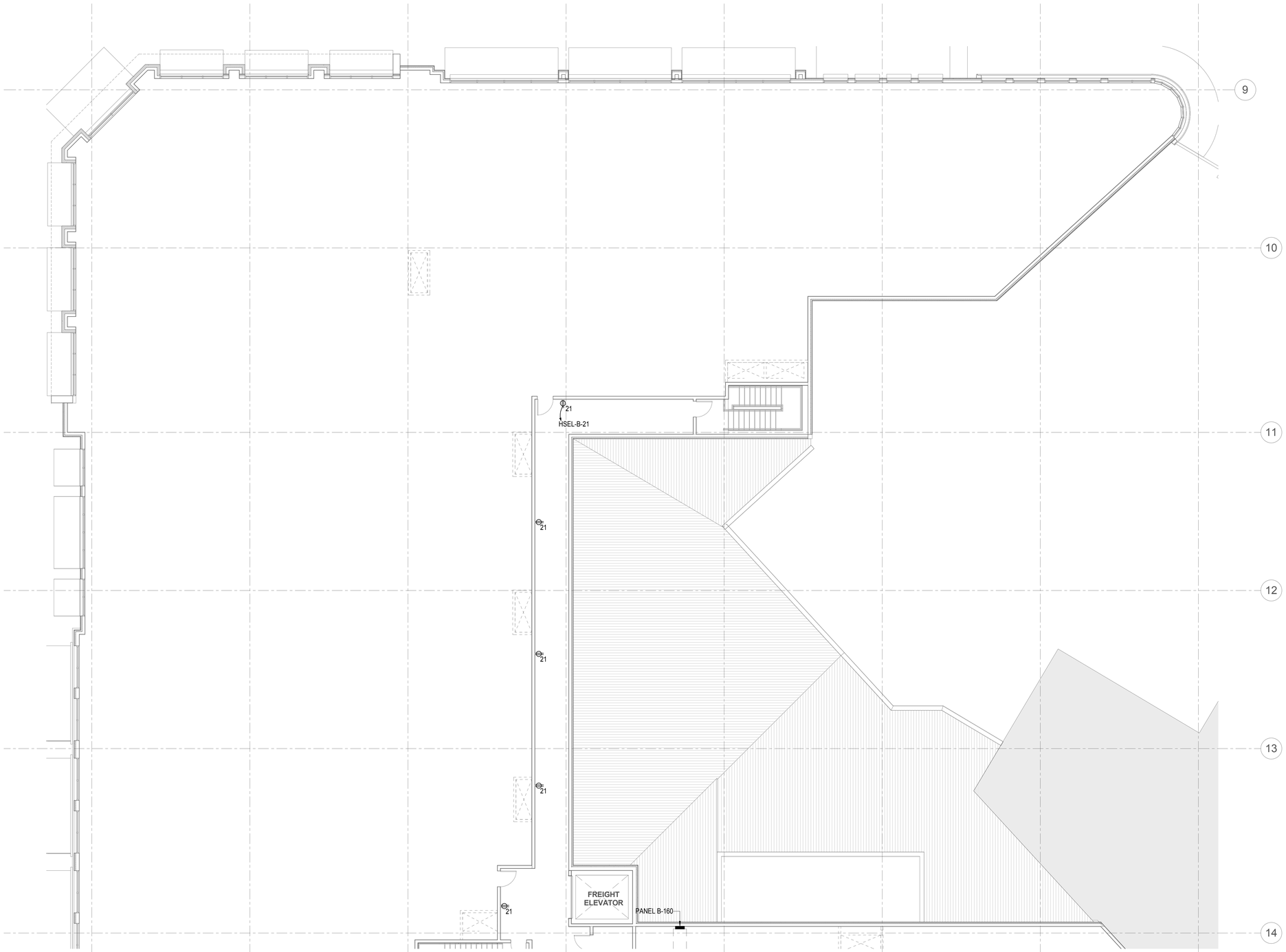

LEVEL 2 ENLARGED EAST POWER PLAN

1/8" = 1'-0"

SEATAC ELECTRIC INC.
7056 SOUTH 220TH STREET
KENT, WA 98032
PHONE (253) 872-6553
FAX (253) 872-4112
www.seataclectric.com

THE VILLAGE AT TOTEM LAKE - BLDG B
KIRKLAND, WASHINGTON 98034

No.	Description	Date

CENTERCAL PROPERTIES, LLC
1600 EAST FRANKLIN
EL SEGUNDO, CA 90245

LEVEL 2 ENLARGED EAST POWER PLAN

PROJECT NUMBER	15115
DATE	04/27/2016
DRAWN BY	CM, IE, NP
CHECKED BY	CM
	E2.07
SCALE	1/8" = 1'-0"

60% CD SET

C:\Users\ianeEdmunds\Documents\Totem Lake_Elec_Bldg_B_IanEdmunds.rvt

5/16/2016 3:27:02 PM

GENERAL NOTES

1. MULTI-WIRE BRANCH CIRCUITS SHALL MEET NEC 210.4 REQUIREMENTS.
2. COLOR OF ALL WIRING DEVICES AND COVER PLATES SHALL BE AS SELECTED BY THE ARCHITECT, U.N.O.. VERIFY WITH ARCHITECT PRIOR TO ORDERING.
3. EQUIPMENT SHOWN BOLD IS NEW.
4. EQUIPMENT SHOWN DASHED IS EXISTING.
5. ITEMS NOTED AS "TYPICAL" ON ANY DRAWING REFERS TO ALL DRAWINGS.
6. PROVIDE NYLON PULL STRING IN ALL EMPTY RACEWAYS.
7. NO STRUCTURAL MEMBERS SHALL BE CUT OR ALTERED WITHOUT PRIOR APPROVAL OF THE ARCHITECT AND STRUCTURAL ENGINEER.
8. LOCATIONS OF ALL MOUNTED DEVICES ARE SHOWN SCHEMATICALLY. COORDINATE WITH THE ARCHITECTURAL DRAWINGS, ELEVATIONS AND CASEWORK SUPPLIERS SHOP DRAWINGS FOR EXACT LOCATION OF DEVICES PRIOR TO ROUGH IN.
9. LOW VOLTAGE WIRING NOT RUN IN A METALLIC RACEWAY SHALL BE PLENUM RATED.
10. EQUIPMENT, LUMINAIRES, RACEWAYS, DEVICES, ETC. SHALL BE UL LISTED.
11. CABLING NOT RUN IN A METALLIC RACEWAY SHALL BE PLENUM RATED.
12. PROVIDE CONDUIT W/ PULL STRING TO EACH TENANT LOCATION.

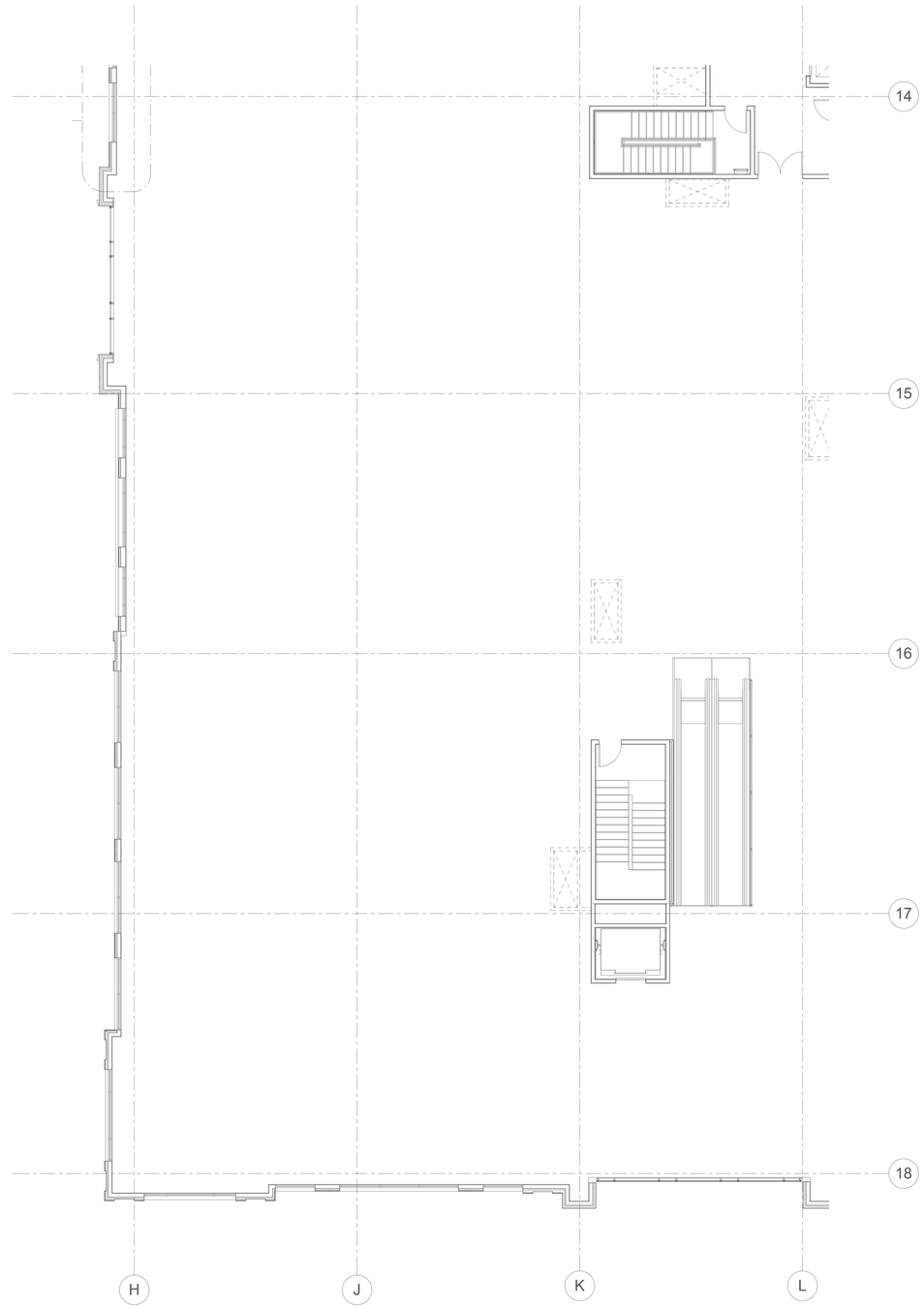

LEVEL 2 ENLARGED NORTHWEST POWER PLAN

1/8" = 1'-0"

SEANTAC ELECTRIC INC.
7056 SOUTH 220TH STREET
KENT, WA 98032
PHONE (253) 872-6553
FAX (253) 872-4112
www.seatacelectric.com

THE VILLAGE AT TOTEM LAKE - BLDG B
KIRKLAND, WASHINGTON 98034

No.	Description	Date

CENTERCAL PROPERTIES, LLC
1600 EAST FRANKLIN
EL SEGUNDO, CA 90245

LEVEL 2 ENLARGED NORTHWEST POWER PLAN

PROJECT NUMBER	15115
DATE	04/27/2016
DRAWN BY	CM, IE, NP
CHECKED BY	CM

E2.08

SCALE 1/8" = 1'-0"

60% CD SET

C:\Users\iane\Documents\Totem Lake_Elec_Bldg_B_IanEdmunds.rvt

5/16/2016 3:27:02 PM

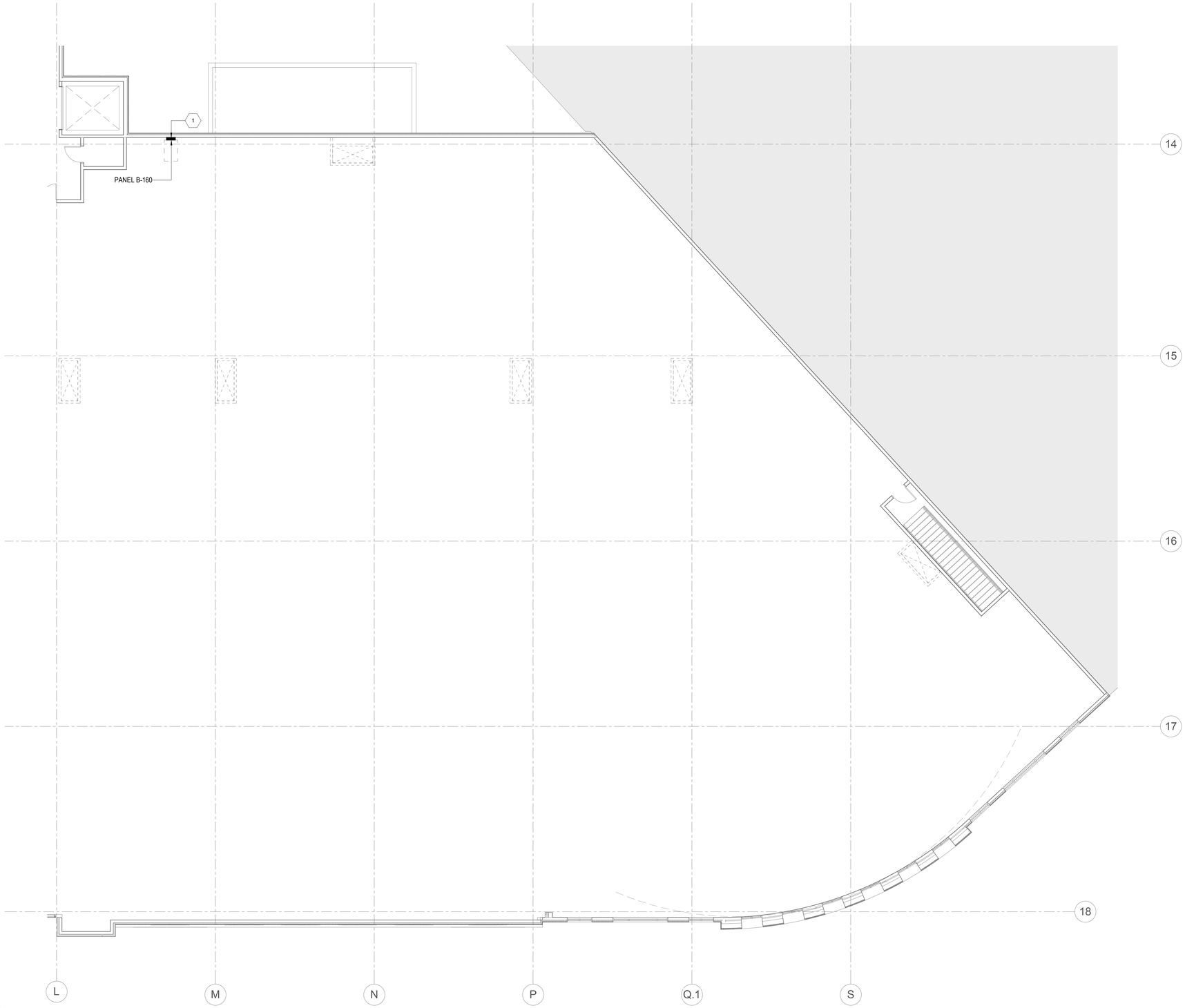

LEVEL 2 ENLARGED SOUTHWEST POWER PLAN

1/8" = 1'-0"

GENERAL NOTES

1. MULTI-WIRE BRANCH CIRCUITS SHALL MEET NEC 210.4 REQUIREMENTS.
2. COLOR OF ALL WIRING DEVICES AND COVER PLATES SHALL BE AS SELECTED BY THE ARCHITECT, U.N.O.. VERIFY WITH ARCHITECT PRIOR TO ORDERING.
3. EQUIPMENT SHOWN BOLD IS NEW.
4. EQUIPMENT SHOWN DASHED IS EXISTING.
5. ITEMS NOTED AS "TYPICAL" ON ANY DRAWING REFERS TO ALL DRAWINGS.
6. PROVIDE NYLON PULL STRING IN ALL EMPTY RACEWAYS.
7. NO STRUCTURAL MEMBERS SHALL BE CUT OR ALTERED WITHOUT PRIOR APPROVAL OF THE ARCHITECT AND STRUCTURAL ENGINEER.
8. LOCATIONS OF ALL MOUNTED DEVICES ARE SHOWN SCHEMATICALLY. COORDINATE WITH THE ARCHITECTURAL DRAWINGS, ELEVATIONS AND CASEWORK SUPPLIERS SHOP DRAWINGS FOR EXACT LOCATION OF DEVICES PRIOR TO ROUGH IN.
9. LOW VOLTAGE WIRING NOT RUN IN A METALLIC RACEWAY SHALL BE PLENUM RATED.
10. EQUIPMENT, LUMINAIRES, RACEWAYS, DEVICES, ETC. SHALL BE UL LISTED.
11. CABLING NOT RUN IN A METALLIC RACEWAY SHALL BE PLENUM RATED.
12. PROVIDE CONDUIT W/ PULL STRING TO EACH TENANT LOCATION.

KEYNOTES

1 PROVIDE THE FOLLOWING POWER, LIGHTING, AND MECHANICAL PROVISIONS FOR (1) MEN'S AND (1) WOMEN'S RESTROOM: (1) GFCI RECEPTACLE, (1) VANITY LIGHT, (1) HAND DRYER, (1) OC SENSOR LIGHT SWITCH, (1) WALL HEATER, AND (1) EXHAUST FAN TO SUPPLY BOTH MEN'S AND WOMEN'S RESTROOMS. CONFIRM LOCATION OF RESTROOM(S) WITH OWNER OR OWNER'S REPRESENTATIVE PRIOR TO ANY ROUGH-IN.

SEATAC ELECTRIC INC.
7056 SOUTH 220TH STREET
KENT, WA 98032
PHONE (253) 872-6553
FAX (253) 872-4112
www.seataclectric.com

THE VILLAGE AT TOTEM LAKE - BLDG B
KIRKLAND, WASHINGTON 98034

No.	Description	Date

CENTERCAL PROPERTIES, LLC
1600 EAST FRANKLIN
EL SEGUNDO, CA 90245

LEVEL 2 ENLARGED SOUTHWEST POWER PLAN

PROJECT NUMBER	15115
DATE	04/27/2016
DRAWN BY	CM, IE, NP
CHECKED BY	CM

E2.09

SCALE 1/8" = 1'-0"

60% CD SET

C:\Users\ianel\Documents\Totem Lake_Elec_Bldg_B_IanEdmunds.rvt

5/16/2016 3:27:03 PM

GENERAL NOTES

1. MULTI-WIRE BRANCH CIRCUITS SHALL MEET NEC 210.4 REQUIREMENTS.
2. COLOR OF ALL WIRING DEVICES AND COVER PLATES SHALL BE AS SELECTED BY THE ARCHITECT, U.N.O.. VERIFY WITH ARCHITECT PRIOR TO ORDERING.
3. EQUIPMENT SHOWN BOLD IS NEW.
4. EQUIPMENT SHOWN DASHED IS EXISTING.
5. ITEMS NOTED AS "TYPICAL" ON ANY DRAWING REFERS TO ALL DRAWINGS.
6. PROVIDE NYLON PULL STRING IN ALL EMPTY RACEWAYS.
7. NO STRUCTURAL MEMBERS SHALL BE CUT OR ALTERED WITHOUT PRIOR APPROVAL OF THE ARCHITECT AND STRUCTURAL ENGINEER.
8. LOCATIONS OF ALL MOUNTED DEVICES ARE SHOWN SCHEMATICALLY. COORDINATE WITH THE ARCHITECTURAL DRAWINGS, ELEVATIONS AND CASEWORK SUPPLIERS SHOP DRAWINGS FOR EXACT LOCATION OF DEVICES PRIOR TO ROUGH IN.
9. EQUIPMENT, LUMINAIRES, RACEWAYS, DEVICES, ETC. SHALL BE UL LISTED.

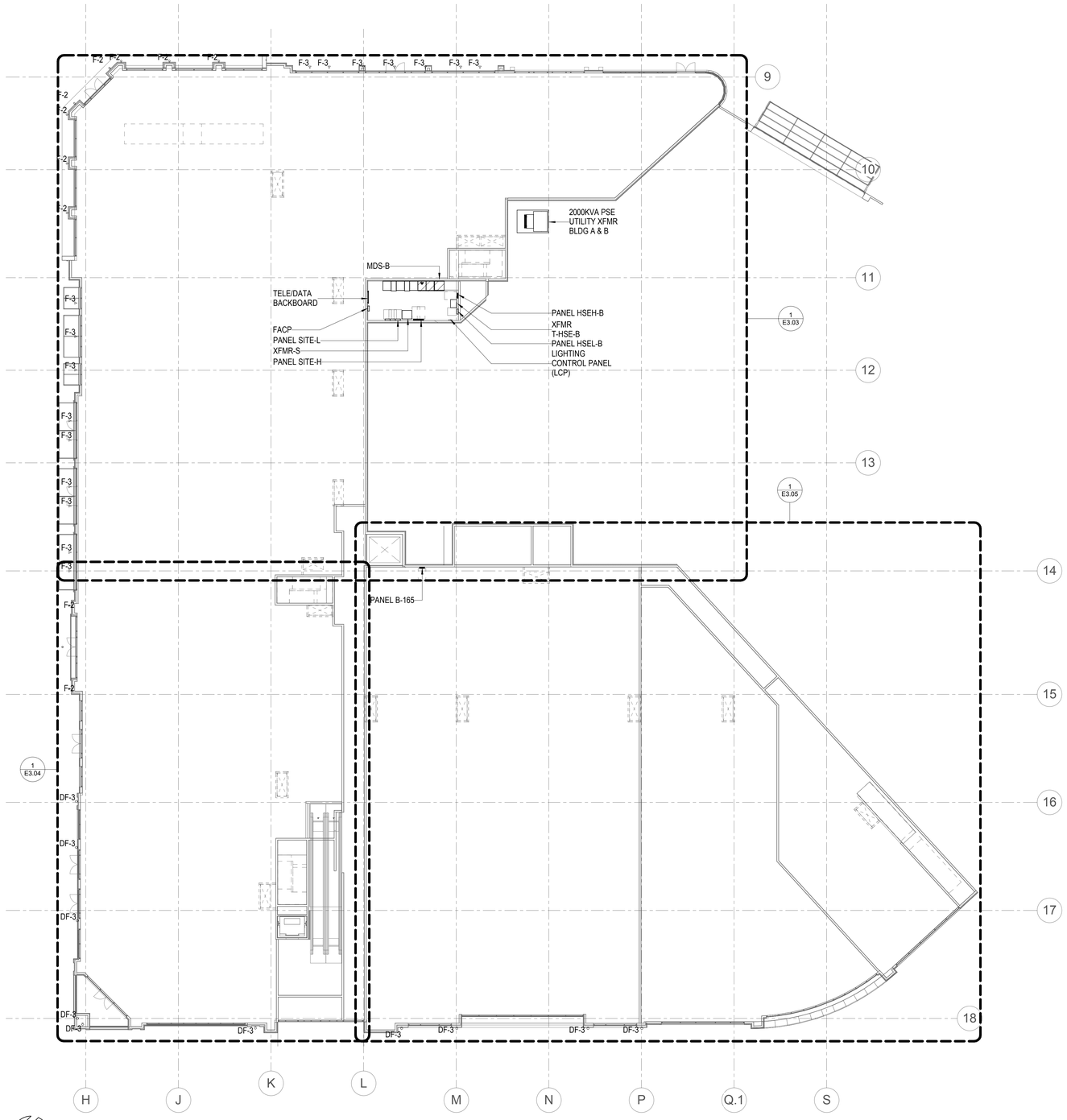

LEVEL 1 OVERALL LIGHTING PLAN

1/16" = 1'-0"

SEANTAC ELECTRIC INC.
7056 SOUTH 220TH STREET
KENT, WA 98032
PHONE (253) 872-6553
FAX (253) 872-4112
www.seatacelectric.com

THE VILLAGE AT TOTEM LAKE - BLDG B
KIRKLAND, WASHINGTON 98034

No.	Description	Date

CENTERCAL PROPERTIES, LLC
1600 EAST FRANKLIN
EL SEGUNDO, CA 90245

LEVEL 1 OVERALL LIGHTING PLAN

PROJECT NUMBER	15115
DATE	04/27/2016
DRAWN BY	CM, IE, NP
CHECKED BY	CM

E3.01

SCALE 1/16" = 1'-0"

60% CD SET

C:\Users\iane\Documents\Totem Lake_Elec_Bldg_B_IanEdmunds.rvt

5/16/2016 3:27:04 PM

GENERAL NOTES

1. MULTI-WIRE BRANCH CIRCUITS SHALL MEET NEC 210.4 REQUIREMENTS.
2. COLOR OF ALL WIRING DEVICES AND COVER PLATES SHALL BE AS SELECTED BY THE ARCHITECT, U.N.O.. VERIFY WITH ARCHITECT PRIOR TO ORDERING.
3. EQUIPMENT SHOWN BOLD IS NEW.
4. EQUIPMENT SHOWN DASHED IS EXISTING.
5. ITEMS NOTED AS "TYPICAL" ON ANY DRAWING REFERS TO ALL DRAWINGS.
6. PROVIDE NYLON PULL STRING IN ALL EMPTY RACEWAYS.
7. NO STRUCTURAL MEMBERS SHALL BE CUT OR ALTERED WITHOUT PRIOR APPROVAL OF THE ARCHITECT AND STRUCTURAL ENGINEER.
8. LOCATIONS OF ALL MOUNTED DEVICES ARE SHOWN SCHEMATICALLY. COORDINATE WITH THE ARCHITECTURAL DRAWINGS, ELEVATIONS AND CASEWORK SUPPLIERS SHOP DRAWINGS FOR EXACT LOCATION OF DEVICES PRIOR TO ROUGH IN.
9. EQUIPMENT, LUMINAIRES, RACEWAYS, DEVICES, ETC. SHALL BE UL LISTED.

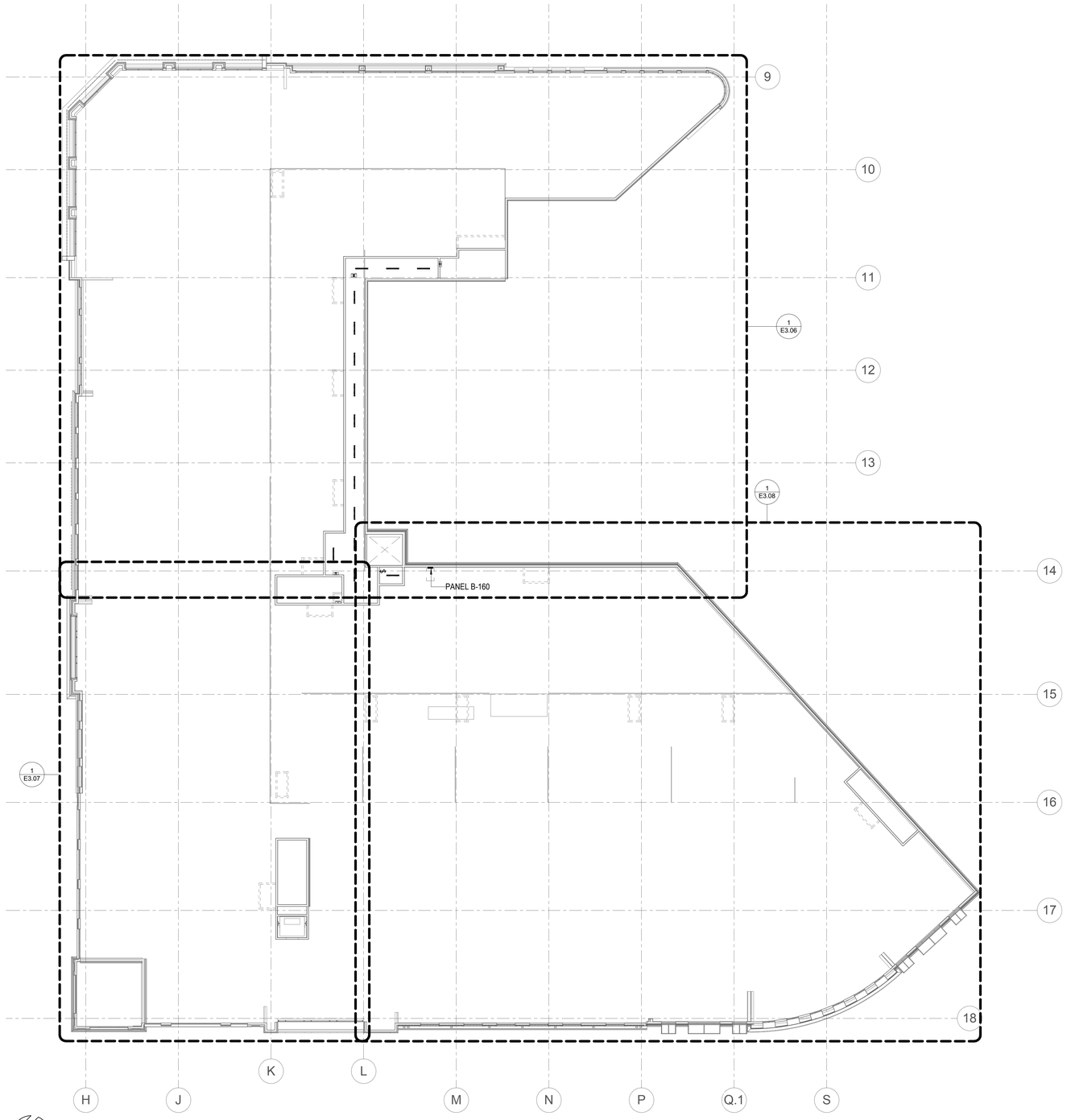

LEVEL 2 OVERALL LIGHTING PLAN

1/16" = 1'-0"

SEATAC ELECTRIC INC.
7056 SOUTH 220TH STREET
KENT, WA 98032
PHONE (253) 872-6553
FAX (253) 872-4112
www.seatacelectric.com

THE VILLAGE AT TOTEM LAKE - BLDG B
KIRKLAND, WASHINGTON 98034

No.	Description	Date

CENTERCAL PROPERTIES, LLC
1600 EAST FRANKLIN
EL SEGUNDO, CA 90245

LEVEL 2 OVERALL LIGHTING PLAN

PROJECT NUMBER	15115
DATE	04/27/2016
DRAWN BY	CM, IE, NP
CHECKED BY	CM

E3.02

SCALE 1/16" = 1'-0"

60% CD SET

C:\Users\ianel\Documents\Totem Lake_Elec_Bldg_B_IanEdmunds.rvt

5/16/2016 3:27:06 PM

GENERAL NOTES

1. MULTI-WIRE BRANCH CIRCUITS SHALL MEET NEC 210.4 REQUIREMENTS.
2. COLOR OF ALL WIRING DEVICES AND COVER PLATES SHALL BE AS SELECTED BY THE ARCHITECT, U.N.O.. VERIFY WITH ARCHITECT PRIOR TO ORDERING.
3. EQUIPMENT SHOWN BOLD IS NEW.
4. EQUIPMENT SHOWN DASHED IS EXISTING.
5. ITEMS NOTED AS "TYPICAL" ON ANY DRAWING REFERS TO ALL DRAWINGS.
6. PROVIDE NYLON PULL STRING IN ALL EMPTY RACEWAYS.
7. NO STRUCTURAL MEMBERS SHALL BE CUT OR ALTERED WITHOUT PRIOR APPROVAL OF THE ARCHITECT AND STRUCTURAL ENGINEER.
8. LOCATIONS OF ALL MOUNTED DEVICES ARE SHOWN SCHEMATICALLY. COORDINATE WITH THE ARCHITECTURAL DRAWINGS, ELEVATIONS AND CASEWORK SUPPLIERS SHOP DRAWINGS FOR EXACT LOCATION OF DEVICES PRIOR TO ROUGH IN.
9. EQUIPMENT, LUMINAIRES, RACEWAYS, DEVICES, ETC. SHALL BE UL LISTED.

KEYNOTES

1 ELECTRICAL CONTRACTOR TO TERMINATE LIGHTING WIRING AT JUNCTION BOX. EXTERIOR LIGHTING TO BE CIRCUITED UNDER TENANT IMPROVEMENT PHASE.

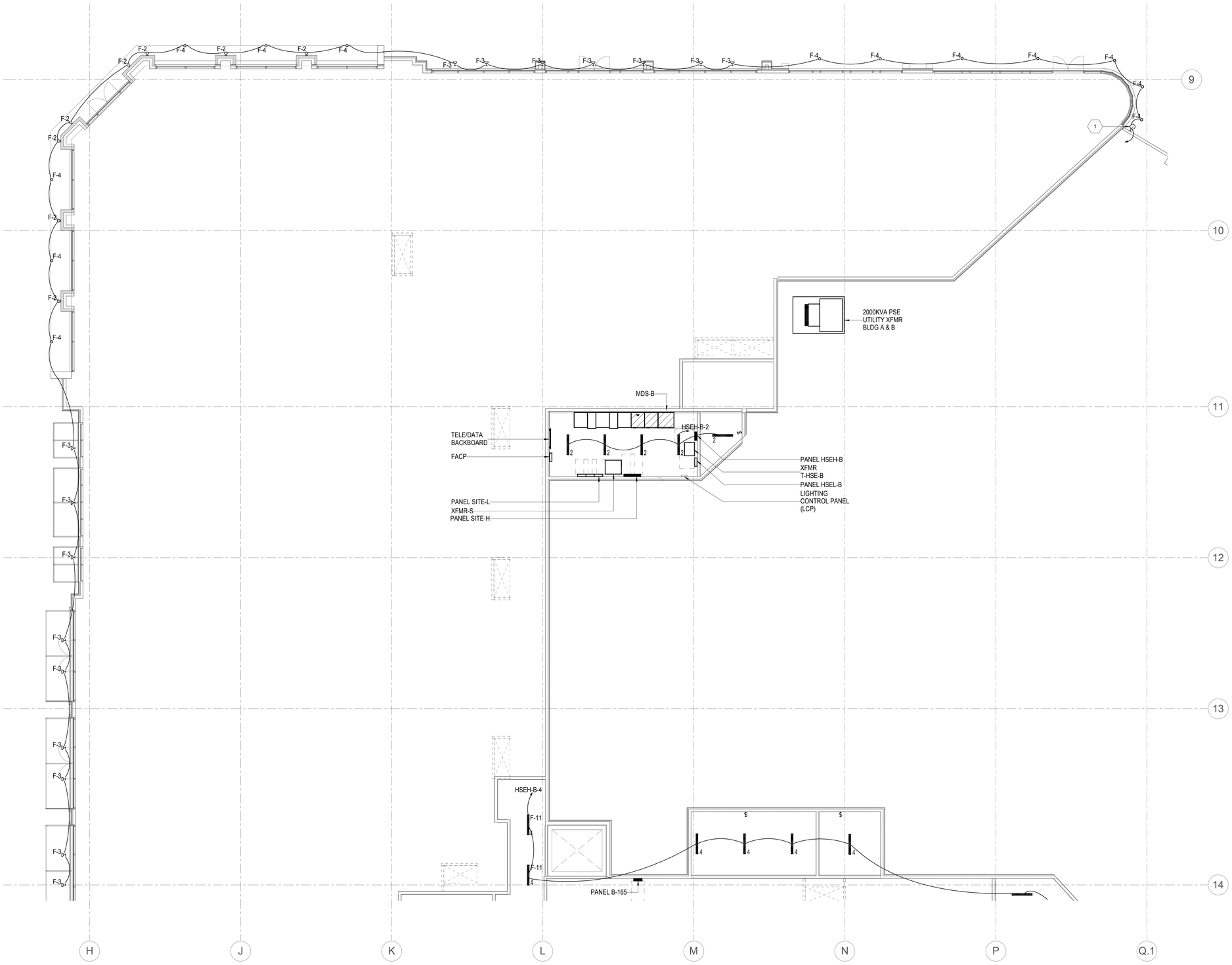

LEVEL 1 ENLARGED EAST LIGHTING PLAN

1/8" = 1'-0"

SEANTAC ELECTRIC INC.
7056 SOUTH 220TH STREET
KENT, WA 98032
PHONE (253) 872-6553
FAX (253) 872-4112
www.seatacelectric.com

THE VILLAGE AT TOTEM LAKE - BLDG B
KIRKLAND, WASHINGTON 98034

No.	Description	Date

CENTERCAL PROPERTIES, LLC
1600 EAST FRANKLIN
EL SEGUNDO, CA 90245

LEVEL 1 ENLARGED EAST LIGHTING PLAN

PROJECT NUMBER	15115
DATE	04/27/2016
DRAWN BY	CM, IE, NP
CHECKED BY	CM
	E3.03
SCALE	1/8" = 1'-0"

60% CD SET

C:\Users\iane\Documents\Totem Lake_Elec_Bldg_B_Ian\Edmunds.rvt

5/16/2016 3:27:07 PM

GENERAL NOTES

1. MULTI-WIRE BRANCH CIRCUITS SHALL MEET NEC 210.4 REQUIREMENTS.
2. COLOR OF ALL WIRING DEVICES AND COVER PLATES SHALL BE AS SELECTED BY THE ARCHITECT, U.N.O.. VERIFY WITH ARCHITECT PRIOR TO ORDERING.
3. EQUIPMENT SHOWN BOLD IS NEW.
4. EQUIPMENT SHOWN DASHED IS EXISTING.
5. ITEMS NOTED AS "TYPICAL" ON ANY DRAWING REFERS TO ALL DRAWINGS.
6. PROVIDE NYLON PULL STRING IN ALL EMPTY RACEWAYS.
7. NO STRUCTURAL MEMBERS SHALL BE CUT OR ALTERED WITHOUT PRIOR APPROVAL OF THE ARCHITECT AND STRUCTURAL ENGINEER.
8. LOCATIONS OF ALL MOUNTED DEVICES ARE SHOWN SCHEMATICALLY. COORDINATE WITH THE ARCHITECTURAL DRAWINGS, ELEVATIONS AND CASEWORK SUPPLIERS SHOP DRAWINGS FOR EXACT LOCATION OF DEVICES PRIOR TO ROUGH IN.
9. EQUIPMENT, LUMINAIRES, RACEWAYS, DEVICES, ETC. SHALL BE UL LISTED.

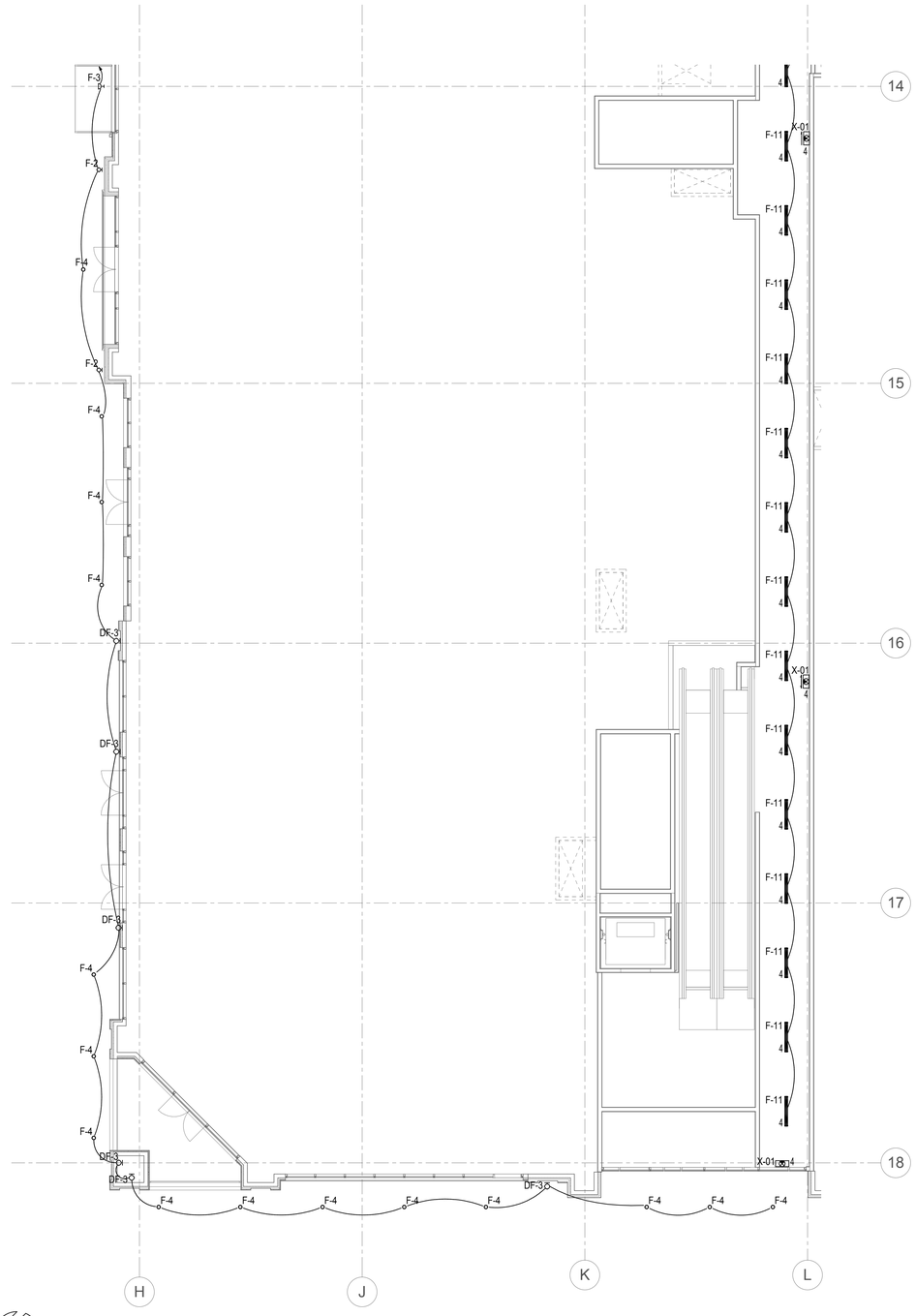

LEVEL 1 ENLARGED NORTHWEST LIGHTING PLAN

1/8" = 1'-0"

SEATAC ELECTRIC INC.
7056 SOUTH 220TH STREET
KENT, WA 98032
PHONE (253) 872-6553
FAX (253) 872-4112
www.seataclectric.com

THE VILLAGE AT TOTEM LAKE - BLDG B
KIRKLAND, WASHINGTON 98034

No.	Description	Date

CENTERCAL PROPERTIES, LLC
1600 EAST FRANKLIN
EL SEGUNDO, CA 90245

LEVEL 1 ENLARGED NORTHWEST LIGHTING PLAN

PROJECT NUMBER	15115
DATE	04/27/2016
DRAWN BY	CM, IE, NP
CHECKED BY	CM

E3.04

SCALE 1/8" = 1'-0"

60% CD SET

C:\Users\ianel\Documents\Totem Lake_Elec_Bldg_B_IanEdmunds.rvt

5/16/2016 3:27:08 PM

GENERAL NOTES

1. MULTI-WIRE BRANCH CIRCUITS SHALL MEET NEC 210.4 REQUIREMENTS.
2. COLOR OF ALL WIRING DEVICES AND COVER PLATES SHALL BE AS SELECTED BY THE ARCHITECT, U.N.O.. VERIFY WITH ARCHITECT PRIOR TO ORDERING.
3. EQUIPMENT SHOWN BOLD IS NEW.
4. EQUIPMENT SHOWN DASHED IS EXISTING.
5. ITEMS NOTED AS "TYPICAL" ON ANY DRAWING REFERS TO ALL DRAWINGS.
6. PROVIDE NYLON PULL STRING IN ALL EMPTY RACEWAYS.
7. NO STRUCTURAL MEMBERS SHALL BE CUT OR ALTERED WITHOUT PRIOR APPROVAL OF THE ARCHITECT AND STRUCTURAL ENGINEER.
8. LOCATIONS OF ALL MOUNTED DEVICES ARE SHOWN SCHEMATICALLY. COORDINATE WITH THE ARCHITECTURAL DRAWINGS, ELEVATIONS AND CASEWORK SUPPLIERS SHOP DRAWINGS FOR EXACT LOCATION OF DEVICES PRIOR TO ROUGH IN.
9. EQUIPMENT, LUMINAIRES, RACEWAYS, DEVICES, ETC. SHALL BE UL LISTED.

KEYNOTES

1 ELECTRICAL CONTRACTOR TO TERMINATE LIGHTING WIRING AT JUNCTION BOX. EXTERIOR LIGHTING TO BE CIRCUITED UNDER TENANT IMPROVEMENT PHASE.

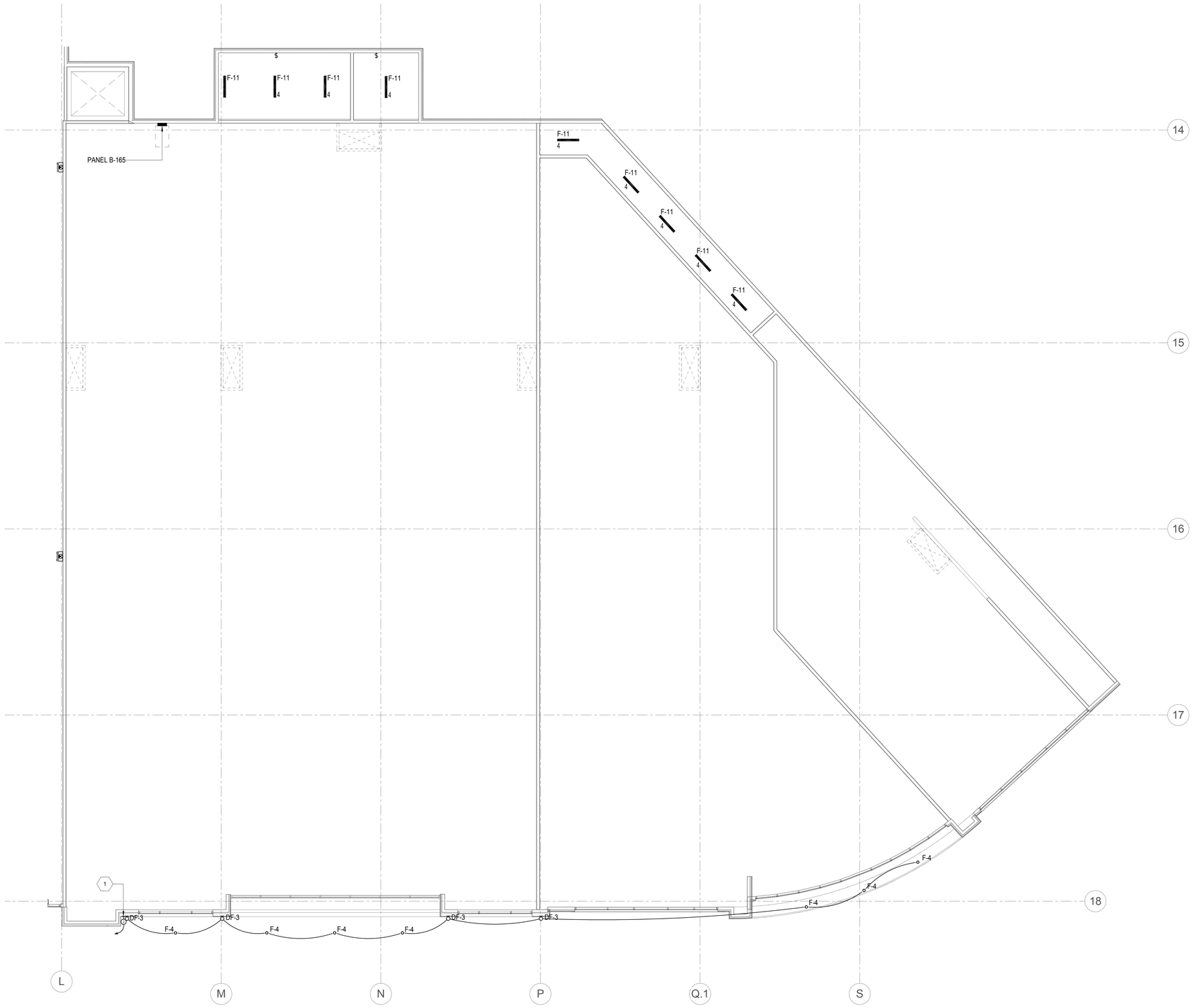

LEVEL 1 ENLARGED SOUTHWEST LIGHTING PLAN

1/8" = 1'-0"

SEANTAC ELECTRIC INC.
7056 SOUTH 220TH STREET
KENT, WA 98032
PHONE (253) 872-6553
FAX (253) 872-4112
www.seatacelectric.com

THE VILLAGE AT TOTEM LAKE - BLDG B
KIRKLAND, WASHINGTON 98034

No.	Description	Date

CENTERCAL PROPERTIES, LLC
1600 EAST FRANKLIN
EL SEGUNDO, CA 90245

LEVEL 1 ENLARGED SOUTHWEST LIGHTING PLAN

PROJECT NUMBER	15115
DATE	04/27/2016
DRAWN BY	CM, IE, NP
CHECKED BY	CM

E3.05

SCALE 1/8" = 1'-0"

60% CD SET

C:\Users\sane\Documents\Totem Lake_Elec_Bldg_B_lanEdmunds.rvt

5/16/2016 3:27:09 PM

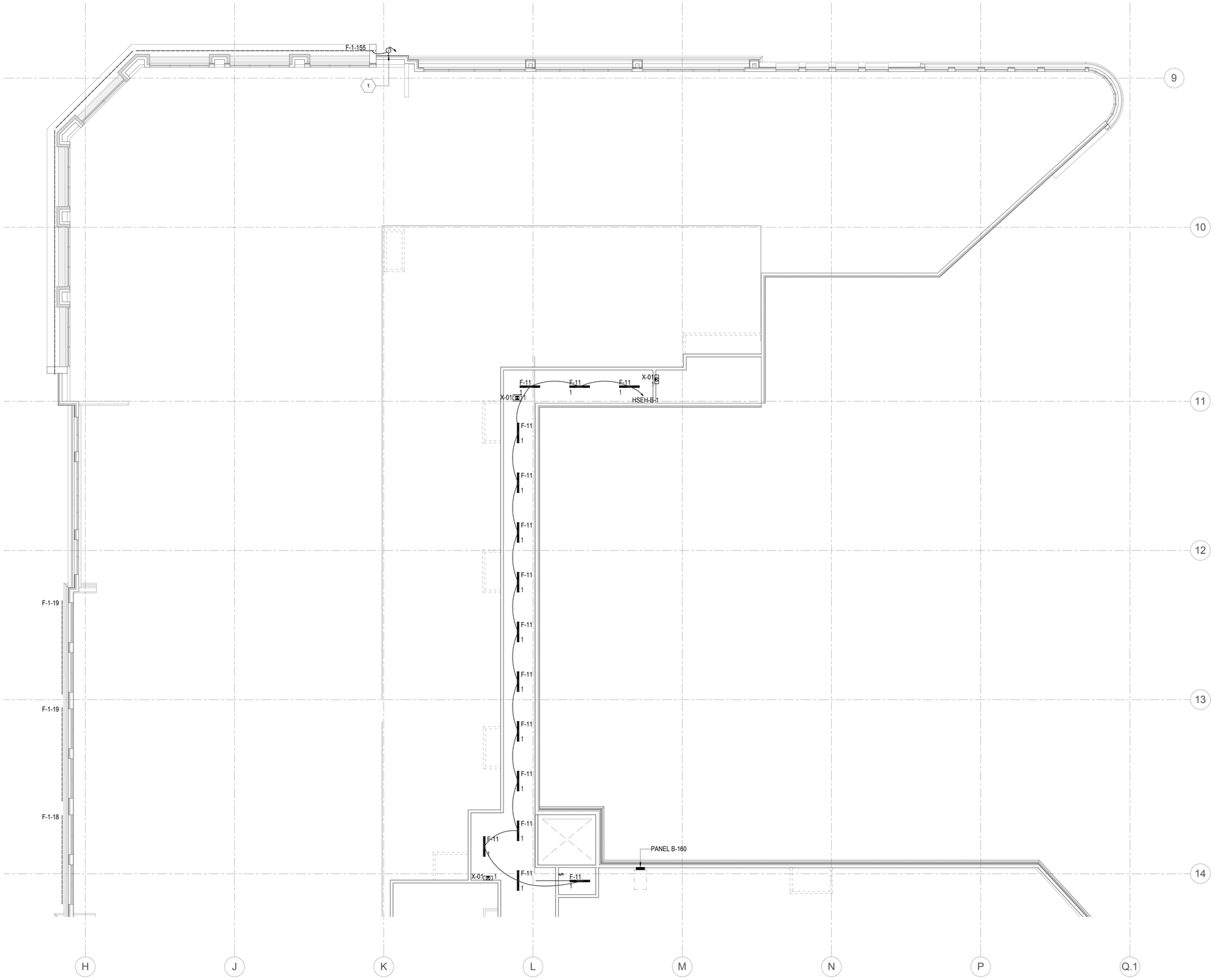

LEVEL 2 ENLARGED EAST LIGHTING PLAN

1/8" = 1'-0"

GENERAL NOTES

1. MULTI-WIRE BRANCH CIRCUITS SHALL MEET NEC 210.4 REQUIREMENTS.
2. COLOR OF ALL WIRING DEVICES AND COVER PLATES SHALL BE AS SELECTED BY THE ARCHITECT, U.N.O.. VERIFY WITH ARCHITECT PRIOR TO ORDERING.
3. EQUIPMENT SHOWN BOLD IS NEW.
4. EQUIPMENT SHOWN DASHED IS EXISTING.
5. ITEMS NOTED AS "TYPICAL" ON ANY DRAWING REFERS TO ALL DRAWINGS.
6. PROVIDE NYLON PULL STRING IN ALL EMPTY RACEWAYS.
7. NO STRUCTURAL MEMBERS SHALL BE CUT OR ALTERED WITHOUT PRIOR APPROVAL OF THE ARCHITECT AND STRUCTURAL ENGINEER.
8. LOCATIONS OF ALL MOUNTED DEVICES ARE SHOWN SCHEMATICALLY. COORDINATE WITH THE ARCHITECTURAL DRAWINGS, ELEVATIONS AND CASEWORK SUPPLIERS SHOP DRAWINGS FOR EXACT LOCATION OF DEVICES PRIOR TO ROUGH IN.
9. EQUIPMENT, LUMINAIRES, RACEWAYS, DEVICES, ETC. SHALL BE UL LISTED.

KEYNOTES

1 ELECTRICAL CONTRACTOR TO TERMINATE LIGHTING WIRING AT JUNCTION BOX. EXTERIOR LIGHTING TO BE CIRCUITED UNDER TENANT IMPROVEMENT PHASE.

SEATAC ELECTRIC INC.
7056 SOUTH 220TH STREET
KENT, WA 98032
PHONE (253) 872-6553
FAX (253) 872-4112
www.seataclectric.com

THE VILLAGE AT TOTEM LAKE - BLDG B
KIRKLAND, WASHINGTON 98034

No.	Description	Date

CENTERCAL PROPERTIES, LLC
1600 EAST FRANKLIN
EL SEGUNDO, CA 90245

LEVEL 2 ENLARGED EAST LIGHTING PLAN

PROJECT NUMBER	15115
DATE	04/27/2016
DRAWN BY	CM, IE, NP
CHECKED BY	CM
	E3.06
SCALE	1/8" = 1'-0"

60% CD SET

C:\Users\iane\Documents\Totem Lake_Elec_Bldg_B_IanEdmunds.rvt

5/16/2016 3:27:10 PM

GENERAL NOTES

1. MULTI-WIRE BRANCH CIRCUITS SHALL MEET NEC 210.4 REQUIREMENTS.
2. COLOR OF ALL WIRING DEVICES AND COVER PLATES SHALL BE AS SELECTED BY THE ARCHITECT, U.N.O.. VERIFY WITH ARCHITECT PRIOR TO ORDERING.
3. EQUIPMENT SHOWN BOLD IS NEW.
4. EQUIPMENT SHOWN DASHED IS EXISTING.
5. ITEMS NOTED AS "TYPICAL" ON ANY DRAWING REFERS TO ALL DRAWINGS.
6. PROVIDE NYLON PULL STRING IN ALL EMPTY RACEWAYS.
7. NO STRUCTURAL MEMBERS SHALL BE CUT OR ALTERED WITHOUT PRIOR APPROVAL OF THE ARCHITECT AND STRUCTURAL ENGINEER.
8. LOCATIONS OF ALL MOUNTED DEVICES ARE SHOWN SCHEMATICALLY. COORDINATE WITH THE ARCHITECTURAL DRAWINGS, ELEVATIONS AND CASEWORK SUPPLIERS SHOP DRAWINGS FOR EXACT LOCATION OF DEVICES PRIOR TO ROUGH IN.
9. EQUIPMENT, LUMINAIRES, RACEWAYS, DEVICES, ETC. SHALL BE UL LISTED.

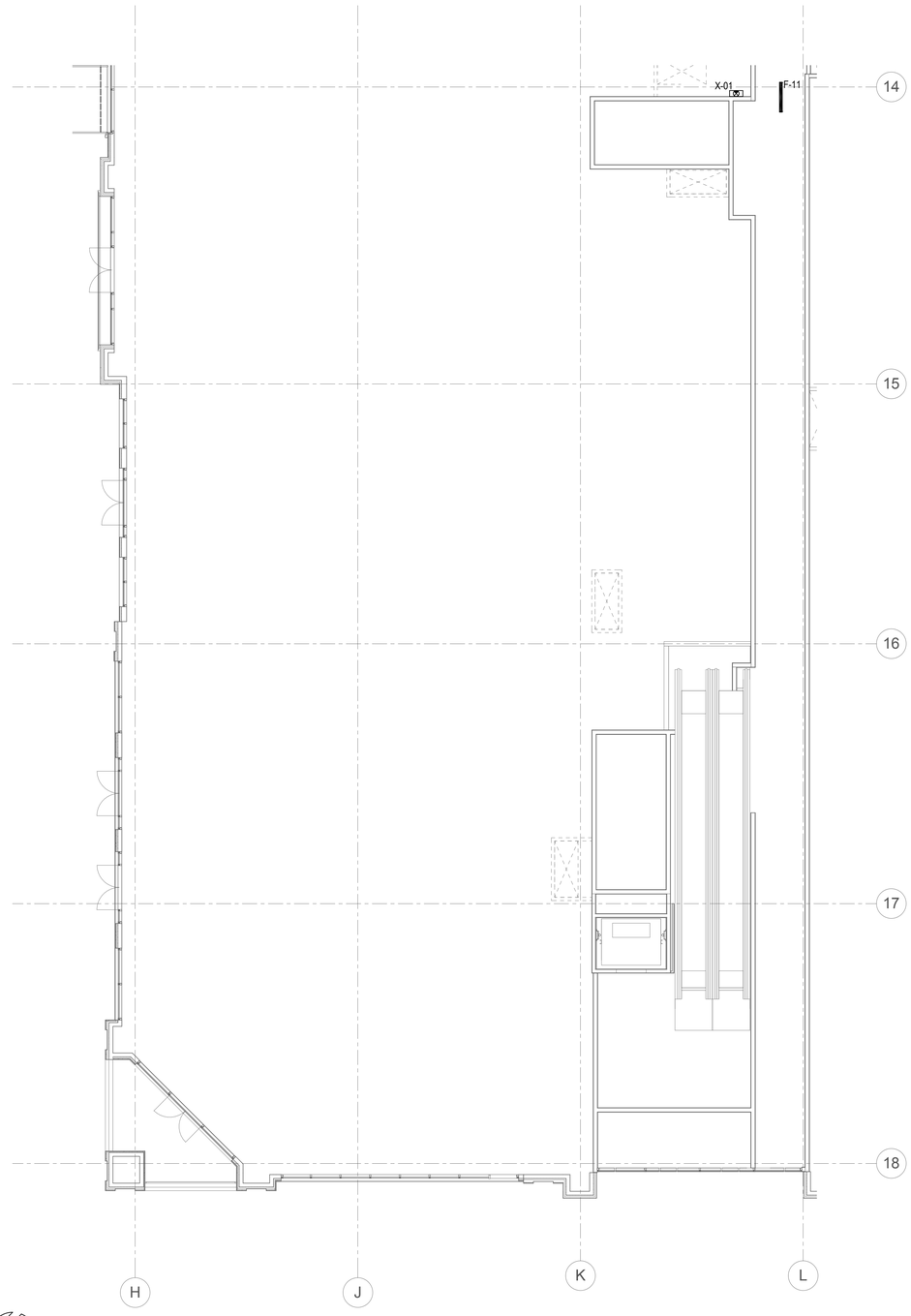

LEVEL 2 ENLARGED NORTHWEST LIGHTING PLAN

1/8" = 1'-0"

SEATAC ELECTRIC INC.
7056 SOUTH 220TH STREET
KENT, WA 98032
PHONE (253) 872-6553
FAX (253) 872-4112
www.seataclectric.com

THE VILLAGE AT TOTEM LAKE - BLDG B
KIRKLAND, WASHINGTON 98034

No.	Description	Date

CENTERCAL PROPERTIES, LLC
1600 EAST FRANKLIN
EL SEGUNDO, CA 90245

LEVEL 2 ENLARGED NORTHWEST LIGHTING PLAN

PROJECT NUMBER	15115
DATE	04/27/2016
DRAWN BY	CM, IE, NP
CHECKED BY	CM

E3.07

SCALE 1/8" = 1'-0"

60% CD SET

C:\Users\iane\Documents\Totem Lake_Elec_Bldg_B_IanEdmunds.rvt

5/18/2016 3:27:11 PM

GENERAL NOTES

1. MULTI-WIRE BRANCH CIRCUITS SHALL MEET NEC 210.4 REQUIREMENTS.
2. COLOR OF ALL WIRING DEVICES AND COVER PLATES SHALL BE AS SELECTED BY THE ARCHITECT, U.N.O.. VERIFY WITH ARCHITECT PRIOR TO ORDERING.
3. EQUIPMENT SHOWN BOLD IS NEW.
4. EQUIPMENT SHOWN DASHED IS EXISTING.
5. ITEMS NOTED AS "TYPICAL" ON ANY DRAWING REFERS TO ALL DRAWINGS.
6. PROVIDE NYLON PULL STRING IN ALL EMPTY RACEWAYS.
7. NO STRUCTURAL MEMBERS SHALL BE CUT OR ALTERED WITHOUT PRIOR APPROVAL OF THE ARCHITECT AND STRUCTURAL ENGINEER.
8. LOCATIONS OF ALL MOUNTED DEVICES ARE SHOWN SCHEMATICALLY. COORDINATE WITH THE ARCHITECTURAL DRAWINGS, ELEVATIONS AND CASEWORK SUPPLIERS SHOP DRAWINGS FOR EXACT LOCATION OF DEVICES PRIOR TO ROUGH IN.
9. EQUIPMENT, LUMINAIRES, RACEWAYS, DEVICES, ETC. SHALL BE UL LISTED.

KEYNOTES

1 ELECTRICAL CONTRACTOR TO TERMINATE LIGHTING WIRING AT JUNCTION BOX. EXTERIOR LIGHTING TO BE CIRCUITED UNDER TENANT IMPROVEMENT PHASE.

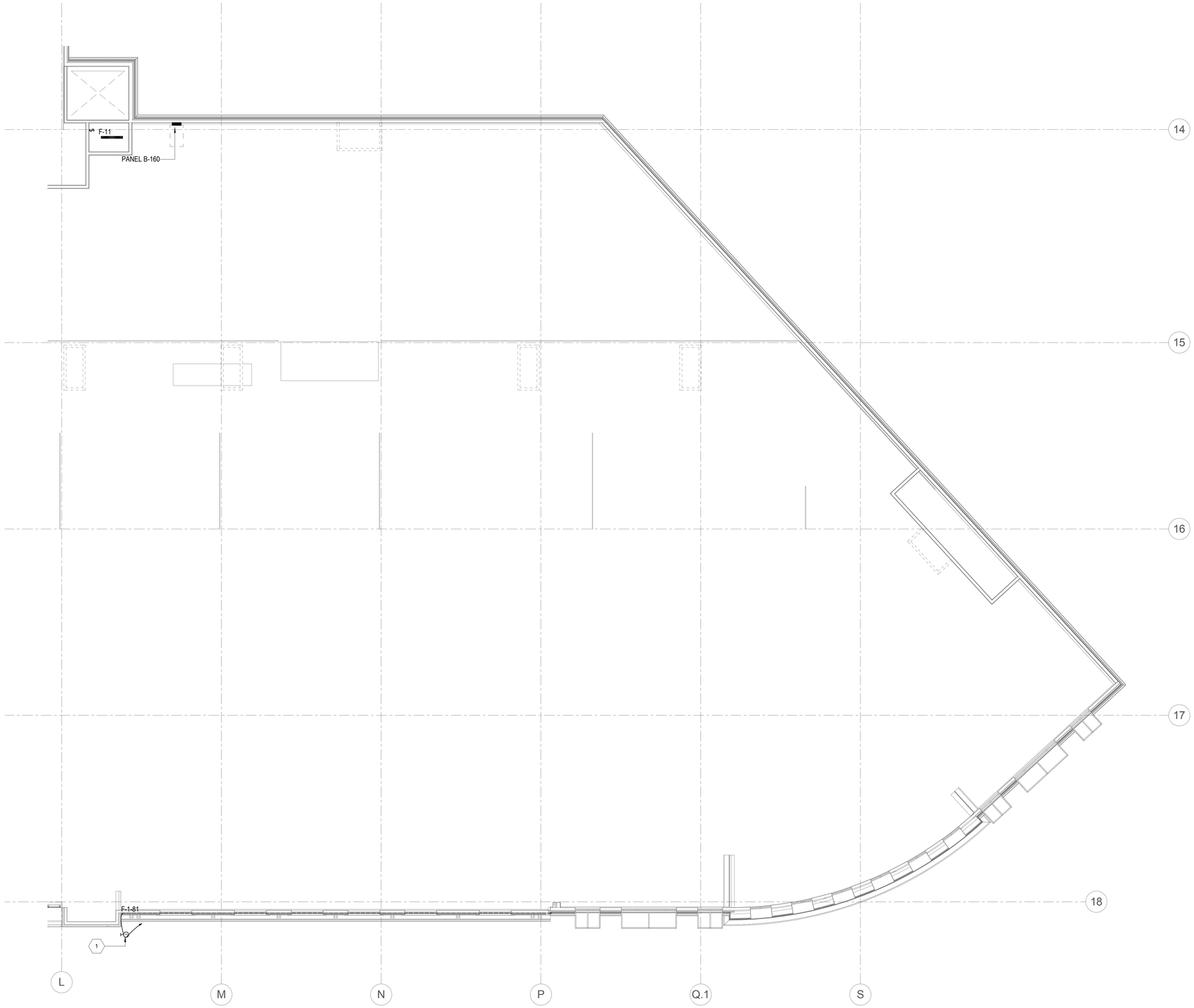

LEVEL 2 ENLARGED SOUTHWEST LIGHTING PLAN

1/8" = 1'-0"

SEATAC ELECTRIC INC.
7056 SOUTH 220TH STREET
KENT, WA 98032
PHONE (253) 872-6553
FAX (253) 872-4112
www.seatacelectric.com

THE VILLAGE AT TOTEM LAKE - BLDG B
KIRKLAND, WASHINGTON 98034

No.	Description	Date

CENTERCAL PROPERTIES, LLC
1600 EAST FRANKLIN
EL SEGUNDO, CA 90245

LEVEL 2 ENLARGED SOUTHWEST LIGHTING PLAN

PROJECT NUMBER	15115
DATE	04/27/2016
DRAWN BY	CM, IE, NP
CHECKED BY	CM
	E3.08
SCALE	1/8" = 1'-0"

60% CD SET

C:\Users\lane\Documents\Totem Lake_Elec_Bldg_B_IanEdmunds.rvt

5/16/2016 3:27:13 PM

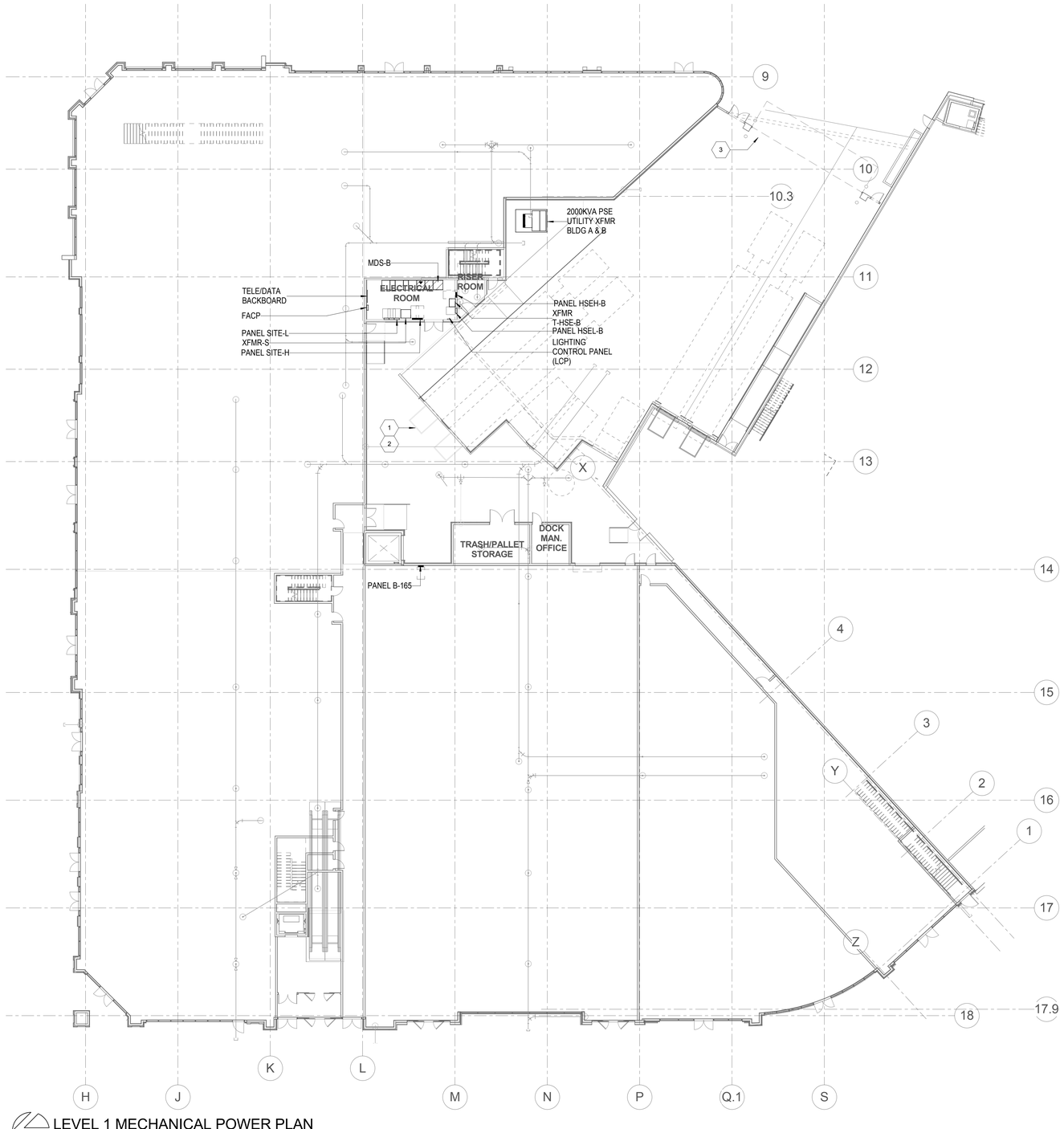

LEVEL 1 MECHANICAL POWER PLAN

1/16" = 1'-0"

GENERAL NOTES

1. MULTI-WIRE BRANCH CIRCUITS SHALL MEET NEC 210.4 REQUIREMENTS.
2. COLOR OF ALL WIRING DEVICES AND COVER PLATES SHALL BE AS SELECTED BY THE ARCHITECT, U.N.O.. VERIFY WITH ARCHITECT PRIOR TO ORDERING.
3. EQUIPMENT SHOWN BOLD IS NEW.
4. EQUIPMENT SHOWN DASHED IS EXISTING.
5. ITEMS NOTED AS "TYPICAL" ON ANY DRAWING REFERS TO ALL DRAWINGS.
6. PROVIDE NYLON PULL STRING IN ALL EMPTY RACEWAYS.
7. NO STRUCTURAL MEMBERS SHALL BE CUT OR ALTERED WITHOUT PRIOR APPROVAL OF THE ARCHITECT AND STRUCTURAL ENGINEER.
8. LOCATIONS OF ALL MOUNTED DEVICES ARE SHOWN SCHEMATICALLY. COORDINATE WITH THE ARCHITECTURAL DRAWINGS, ELEVATIONS AND CASEWORK SUPPLIERS SHOP DRAWINGS FOR EXACT LOCATION OF DEVICES PRIOR TO ROUGH IN.
9. EQUIPMENT, LUMINAIRES, RACEWAYS, DEVICES, ETC. SHALL BE UL LISTED.
10. WHERE A CONFLICT EXISTS THE MOST INEXPENSIVE OPTION SHALL GOVERN.
11. PRIOR TO ORDERING EQUIPMENT OR ROUGH-IN, COORDINATE WITH THE MECHANICAL CONTRACTOR TO ESTABLISH THE ACTUAL LOAD AND OVERCURRENT PROTECTION REQUIREMENTS FOR EACH PIECE OF EQUIPMENT.
12. REFER TO MECHANICAL EQUIPMENT CONNECTION SCHEDULE FOR EQUIPMENT RATINGS AND FEEDER SIZES.
13. PROVIDE DISCONNECT SWITCH FOR EACH PIECE OF EQUIPMENT AS SHOWN ON MECHANICAL EQUIPMENT CONNECTION SCHEDULE.
14. PRIOR TO ROUGH-IN OF ALL EQUIPMENT SPECIFIED BY OTHER DIVISIONS COORDINATE WITH THE EQUIPMENT MANUFACTURER TO ESTABLISH ALL REQUIREMENTS FOR EACH PIECE OF EQUIPMENT.
15. VERIFY ELECTRICAL REQUIREMENTS WITH MANUFACTURER SHOP DRAWINGS PRIOR TO ROUGH-IN.
16. INSTALL AND WIRE EQUIPMENT PER MANUFACTURER SHOP DRAWING.

KEYNOTES

1 CONFIRM ELECTRICAL POWER CONNECTION REQUIREMENTS FOR LOADING DOCK LEVELERS WITH OWNER OR OWNER'S REPRESENTATIVE PRIOR TO ANY ROUGH-IN.

2 CONFIRM ELECTRICAL POWER CONNECTION REQUIREMENTS FOR LOADING DOCK DOORS WITH OWNER OR OWNER'S REPRESENTATIVE PRIOR TO ANY ROUGH-IN.

3 CONFIRM ELECTRICAL POWER CONNECTION REQUIREMENTS FOR MEGADOOR WITH OWNER OR OWNER'S REPRESENTATIVE PRIOR TO ANY ROUGH-IN.

SEANTAC
ELECTRIC INC.
7056 SOUTH 220TH STREET
KENT, WA 98032
PHONE (253) 872-6553
FAX (253) 872-4112
www.seatacelectric.com

THE VILLAGE AT TOTEM LAKE - BLDG B
KIRKLAND, WASHINGTON 98034

No.	Description	Date

CENTERCAL PROPERTIES, LLC
1600 EAST FRANKLIN
EL SEGUNDO, CA 90245

LEVEL 1 MECHANICAL POWER PLAN

PROJECT NUMBER	15115
DATE	04/27/2016
DRAWN BY	CM, IE, NP
CHECKED BY	CM

E4.01

SCALE 1/16" = 1'-0"

60% CD SET

C:\Users\iane\Documents\Totem Lake_Elec_Bldg_B_IanEdmunds.rvt

5/16/2016 3:27:14 PM

GENERAL NOTES

1. MULTI-WIRE BRANCH CIRCUITS SHALL MEET NEC 210.4 REQUIREMENTS.
2. COLOR OF ALL WIRING DEVICES AND COVER PLATES SHALL BE AS SELECTED BY THE ARCHITECT, U.N.O.. VERIFY WITH ARCHITECT PRIOR TO ORDERING.
3. EQUIPMENT SHOWN BOLD IS NEW.
4. EQUIPMENT SHOWN DASHED IS EXISTING.
5. ITEMS NOTED AS "TYPICAL" ON ANY DRAWING REFERS TO ALL DRAWINGS.
6. PROVIDE NYLON PULL STRING IN ALL EMPTY RACEWAYS.
7. NO STRUCTURAL MEMBERS SHALL BE CUT OR ALTERED WITHOUT PRIOR APPROVAL OF THE ARCHITECT AND STRUCTURAL ENGINEER.
8. LOCATIONS OF ALL MOUNTED DEVICES ARE SHOWN SCHEMATICALLY. COORDINATE WITH THE ARCHITECTURAL DRAWINGS, ELEVATIONS AND CASEWORK SUPPLIERS SHOP DRAWINGS FOR EXACT LOCATION OF DEVICES PRIOR TO ROUGH IN.
9. EQUIPMENT, LUMINAIRES, RACEWAYS, DEVICES, ETC. SHALL BE UL LISTED.
10. WHERE A CONFLICT EXISTS THE MOST INEXPENSIVE OPTION SHALL GOVERN.
11. PRIOR TO ORDERING EQUIPMENT OR ROUGH-IN, COORDINATE WITH THE MECHANICAL CONTRACTOR TO ESTABLISH THE ACTUAL LOAD AND OVERCURRENT PROTECTION REQUIREMENTS FOR EACH PIECE OF EQUIPMENT.
12. REFER TO MECHANICAL EQUIPMENT CONNECTION SCHEDULE FOR EQUIPMENT RATINGS AND FEEDER SIZES.
13. PROVIDE DISCONNECT SWITCH FOR EACH PIECE OF EQUIPMENT AS SHOWN ON MECHANICAL EQUIPMENT CONNECTION SCHEDULE.
14. PRIOR TO ROUGH-IN OF ALL EQUIPMENT SPECIFIED BY OTHER DIVISIONS COORDINATE WITH THE EQUIPMENT MANUFACTURER TO ESTABLISH ALL REQUIREMENTS FOR EACH PIECE OF EQUIPMENT.
15. VERIFY ELECTRICAL REQUIREMENTS WITH MANUFACTURER SHOP DRAWINGS PRIOR TO ROUGH-IN.
16. INSTALL AND WIRE EQUIPMENT PER MANUFACTURER SHOP DRAWING.

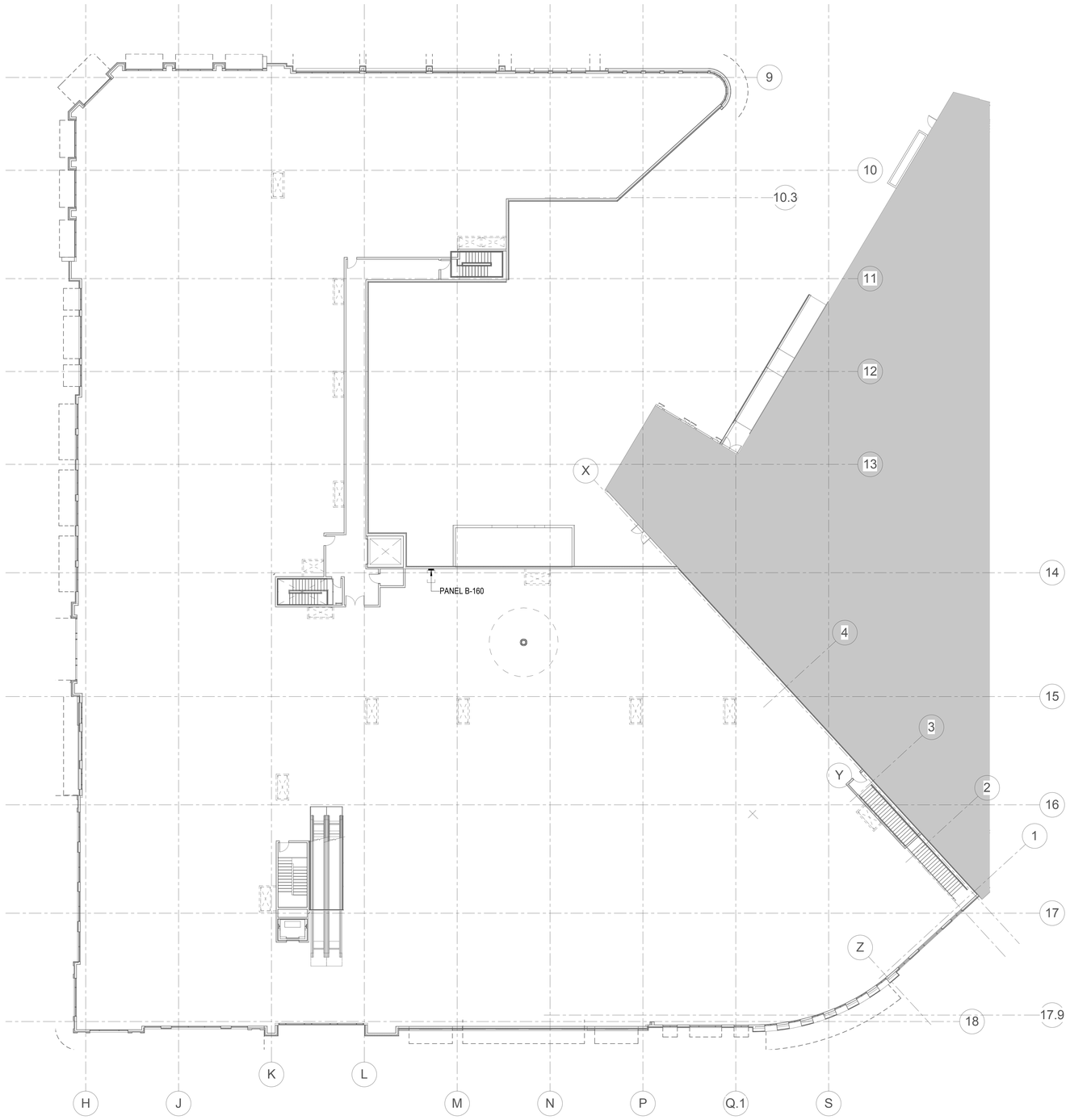

LEVEL 2 MECHANICAL POWER PLAN

1/16" = 1'-0"

SEANTAC ELECTRIC INC.
7056 SOUTH 220TH STREET
KENT, WA 98032
PHONE (253) 872-6553
FAX (253) 872-4112
www.seatacelectric.com

THE VILLAGE AT TOTEM LAKE - BLDG B
KIRKLAND, WASHINGTON 98034

No.	Description	Date

CENTERCAL PROPERTIES, LLC
1600 EAST FRANKLIN
EL SEGUNDO, CA 90245

LEVEL 2 MECHANICAL POWER PLAN

PROJECT NUMBER	15115
DATE	04/27/2016
DRAWN BY	CM, IE, NP
CHECKED BY	CM

E4.02

SCALE 1/16" = 1'-0"

60% CD SET

C:\Users\iane\Documents\Totem Lake_Elec_Bldg_B_IanEdmunds.rvt

5/16/2016 3:27:16 PM

GENERAL NOTES

1. MULTI-WIRE BRANCH CIRCUITS SHALL MEET NEC 210.4 REQUIREMENTS.
2. COLOR OF ALL WIRING DEVICES AND COVER PLATES SHALL BE AS SELECTED BY THE ARCHITECT, U.N.O.. VERIFY WITH ARCHITECT PRIOR TO ORDERING.
3. EQUIPMENT SHOWN BOLD IS NEW.
4. EQUIPMENT SHOWN DASHED IS EXISTING.
5. ITEMS NOTED AS "TYPICAL" ON ANY DRAWING REFERS TO ALL DRAWINGS.
6. PROVIDE NYLON PULL STRING IN ALL EMPTY RACEWAYS.
7. NO STRUCTURAL MEMBERS SHALL BE CUT OR ALTERED WITHOUT PRIOR APPROVAL OF THE ARCHITECT AND STRUCTURAL ENGINEER.
8. LOCATIONS OF ALL MOUNTED DEVICES ARE SHOWN SCHEMATICALLY. COORDINATE WITH THE ARCHITECTURAL DRAWINGS, ELEVATIONS AND CASEWORK SUPPLIERS SHOP DRAWINGS FOR EXACT LOCATION OF DEVICES PRIOR TO ROUGH IN.
9. EQUIPMENT, LUMINAIRES, RACEWAYS, DEVICES, ETC. SHALL BE UL LISTED.
10. WHERE A CONFLICT EXISTS THE MOST INEXPENSIVE OPTION SHALL GOVERN.
11. PRIOR TO ORDERING EQUIPMENT OR ROUGH-IN, COORDINATE WITH THE MECHANICAL CONTRACTOR TO ESTABLISH THE ACTUAL LOAD AND OVERCURRENT PROTECTION REQUIREMENTS FOR EACH PIECE OF EQUIPMENT.
12. REFER TO MECHANICAL EQUIPMENT CONNECTION SCHEDULE FOR EQUIPMENT RATINGS AND FEEDER SIZES.
13. PROVIDE DISCONNECT SWITCH FOR EACH PIECE OF EQUIPMENT AS SHOWN ON MECHANICAL EQUIPMENT CONNECTION SCHEDULE.
14. PRIOR TO ROUGH-IN OF ALL EQUIPMENT SPECIFIED BY OTHER DIVISIONS COORDINATE WITH THE EQUIPMENT MANUFACTURER TO ESTABLISH ALL REQUIREMENTS FOR EACH PIECE OF EQUIPMENT.
15. VERIFY ELECTRICAL REQUIREMENTS WITH MANUFACTURER SHOP DRAWINGS PRIOR TO ROUGH-IN.
16. INSTALL AND WIRE EQUIPMENT PER MANUFACTURER SHOP DRAWING.

KEYNOTES

1 MECHANICAL EQUIPMENT LOCATION AND SIZE TO BE DETERMINED BY MECHANICAL CONTRACTOR PER TENANT SPACE. TYPICAL OF ALL UNITS.

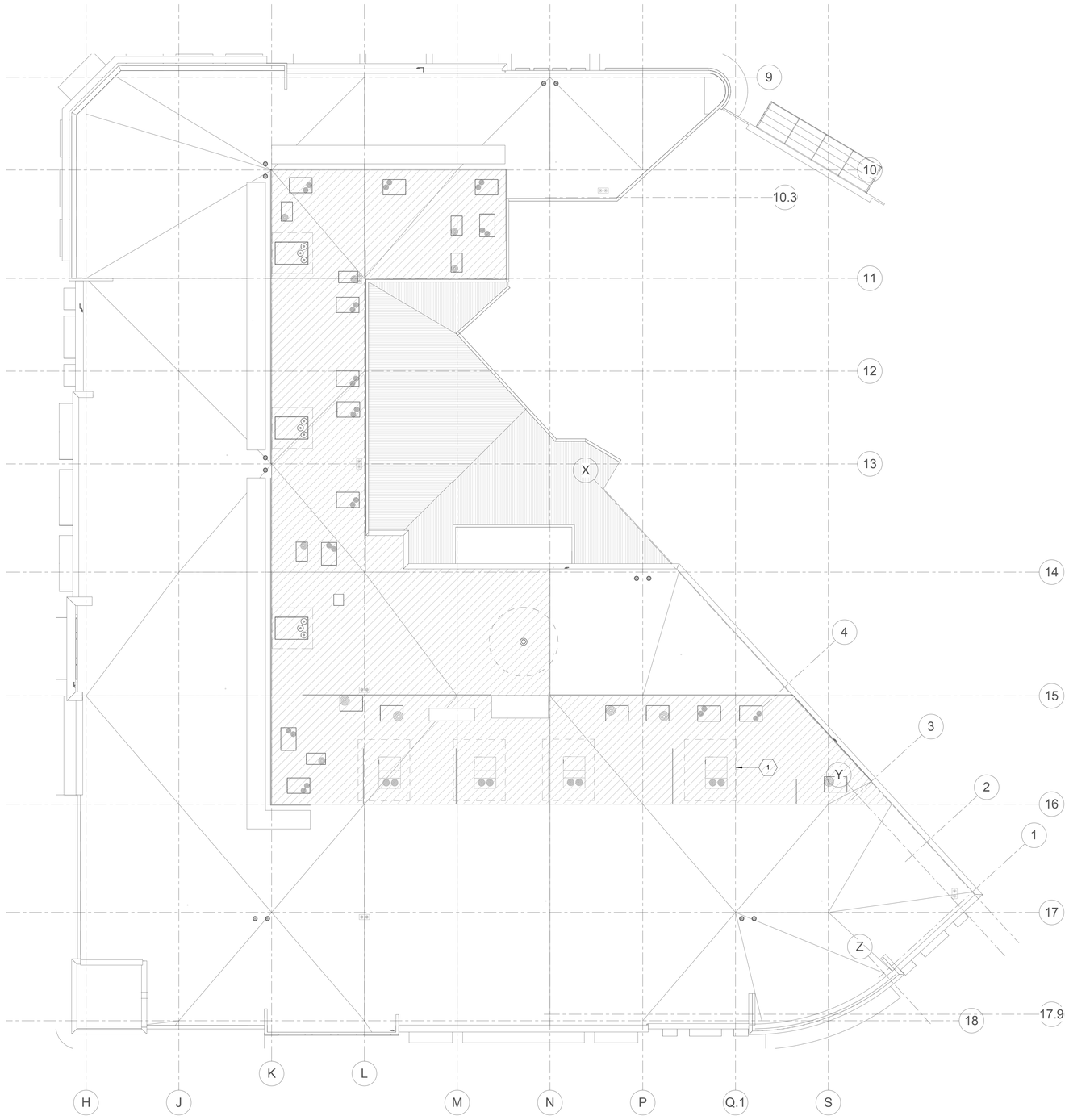

ROOF MECHANICAL POWER PLAN

1/16" = 1'-0"

SEANTAC ELECTRIC INC.
7056 SOUTH 220TH STREET
KENT, WA 98032
PHONE (253) 872-6553
FAX (253) 872-4112
www.seatacelectric.com

THE VILLAGE AT TOTEM LAKE - BLDG B
KIRKLAND, WASHINGTON 98034

No.	Description	Date

CENTERCAL PROPERTIES, LLC
1600 EAST FRANKLIN
EL SEGUNDO, CA 90245

ROOF MECHANICAL POWER PLAN

PROJECT NUMBER	15115
DATE	04/27/2016
DRAWN BY	CM, IE, NP
CHECKED BY	CM

E4.03

SCALE 1/16" = 1'-0"

60% CD SET

C:\Users\iane\Documents\Totem Lake_Elec_Bldg_B_IanEdmunds.rvt

5/18/2016 3:27:19 PM

FAULT CURRENT @ UTILITY XFMR SECONDARY ========> 45200.00 Amps

Calculation for Fault Value at COMMERCIAL METER CENTER

Conductor		
Starting Fault Value at UTILITY	===>	45200.00 Amps
Wire Size	750 kcmil	
Conductor type (AL=Alum, CU=Copper)		AL
Conduit type (S=Steel, P=PVC)		P
Z /1000' @.85pf (NEC Table 9)		0.045
No. of Parellel Runs		11
Distance (Feet)		81
Voltage (L-L)		480
Phase (1ph = 2, 3ph = 1.73)		1.73
f-Factor		0.053982
Multiplier "M" = 1/(1+f)		0.948783
Line to Line RMS Fault at COMMERCIAL METER CENTER		**42,884.99 Amps**

Calculation for Fault Value at PANEL HSEH

Conductor		
Starting Fault Value at COMMERCIAL METER...	===>	42884.99 Amps
Wire Size	250 kcmil	
Conductor type (AL=Alum, CU=Copper)		AL
Conduit type (S=Steel, P=PVC)		S
Z /1000' @.85pf (NEC Table 9)		0.1
No. of Parellel Runs		1
Distance (Feet)		12
Voltage (L-L)		480
Phase (1ph = 2, 3ph = 1.73)		1.73
f-Factor		0.185478
Multiplier "M" = 1/(1+f)		0.843542
Line to Line RMS Fault at PANEL HSEH		**36,175.28 Amps**

Calculation for Fault Value at XFMR-HSE PRIMARY FEEDER

Conductor		
Starting Fault Value at PANEL HSEH	===>	36175.28 Amps
Wire Size	1/0 kcmil	
Conductor type (AL=Alum, CU=Copper)		AL
Conduit type (S=Steel, P=PVC)		S
Z /1000' @.85pf (NEC Table 9)		0.2
No. of Parellel Runs		1
Distance (Feet)		5
Voltage (L-L)		480
Phase (1ph = 2, 3ph = 1.73)		1.73
f-Factor		0.130382
Multiplier "M" = 1/(1+f)		0.884657
Line to Line RMS Fault at XFMR-HSE PRIMARY FEEDER		**32,002.71 Amps**

Calculation for Fault Value at XFMR-HSE SECONDARY FEEDER

Transformer		
Starting Fault Value at Primary to XFMR-HSE PRIMARY...	===>	32002.71
Transformer %Z (150-deg rise)		5.9
Transformer KVA		75
Line to Line Primary Voltage		480
Line to Line Secondary Voltage		208
Phase (1ph = 1, 3ph = 1.73)		1.73
f-Factor		20.90570864
Multiplier "M" = 1/(1+f)		0.045650201
Line to Line RMS Fault at XFMR-HSE SECONDARY FEEDER		3371.377624 Amps

Calculation for Fault Value at PANEL HSEL

Conductor		
Starting Fault Value at XFMR-HSE SECONDARY...	===>	3371.38 Amps
Wire Size	250 kcmil	
Conductor type (AL=Alum, CU=Copper)		AL
Conduit type (S=Steel, P=PVC)		S
Z /1000' @.85pf (NEC Table 9)		0.1
No. of Parellel Runs		1
Distance (Feet)		5
Voltage (L-L)		208
Phase (1ph = 2, 3ph = 1.73)		1.73
f-Factor		0.014020
Multiplier "M" = 1/(1+f)		0.986173
Line to Line RMS Fault at PANEL HSEL		**3,324.76 Amps**

Calculation for Fault Value at PANEL TENANT 160 (NORDSTROM RACK)

Conductor		
Starting Fault Value at COMMERCIAL METER...	===>	42884.99 Amps
Wire Size	250 kcmil	
Conductor type (AL=Alum, CU=Copper)		AL
Conduit type (S=Steel, P=PVC)		P
Z /1000' @.85pf (NEC Table 9)		0.094
No. of Parellel Runs		2
Distance (Feet)		124
Voltage (L-L)		480
Phase (1ph = 2, 3ph = 1.73)		1.73
f-Factor		0.900803
Multiplier "M" = 1/(1+f)		0.526094
Line to Line RMS Fault at PANEL TENANT 160 (NORDSTRO...		**22,561.51 Amps**

Calculation for Fault Value at PANEL TENANT 165 (TRADER JOE'S)

Conductor		
Starting Fault Value at COMMERCIAL METER...	===>	42884.99 Amps
Wire Size	500 kcmil	
Conductor type (AL=Alum, CU=Copper)		AL
Conduit type (S=Steel, P=PVC)		P
Z /1000' @.85pf (NEC Table 9)		0.057
No. of Parellel Runs		2
Distance (Feet)		102
Voltage (L-L)		480
Phase (1ph = 2, 3ph = 1.73)		1.73
f-Factor		0.449319
Multiplier "M" = 1/(1+f)		0.689979
Line to Line RMS Fault at PANEL TENANT 165 (TRADER JOE'S)		**29,589.74 Amps**

Calculation for Fault Value at PANEL SITE-H

Conductor		
Starting Fault Value at COMMERCIAL METER...	===>	42884.99 Amps
Wire Size	400 kcmil	
Conductor type (AL=Alum, CU=Copper)		AL
Conduit type (S=Steel, P=PVC)		S
Z /1000' @.85pf (NEC Table 9)		0.073
No. of Parellel Runs		3
Distance (Feet)		35
Voltage (L-L)		480
Phase (1ph = 2, 3ph = 1.73)		1.73
f-Factor		0.131638
Multiplier "M" = 1/(1+f)		0.883675
Line to Line RMS Fault at PANEL SITE-H		**37,896.40 Amps**

Calculation for Fault Value at XFMR-S PRIMARY FEEDER

Conductor		
Starting Fault Value at PANEL SITE-H	===>	37896.40 Amps
Wire Size	250 kcmil	
Conductor type (AL=Alum, CU=Copper)		AL
Conduit type (S=Steel, P=PVC)		S
Z /1000' @.85pf (NEC Table 9)		0.1
No. of Parellel Runs		2
Distance (Feet)		5
Voltage (L-L)		480
Phase (1ph = 2, 3ph = 1.73)		1.73
f-Factor		0.034146
Multiplier "M" = 1/(1+f)		0.966981
Line to Line RMS Fault at XFMR-S PRIMARY FEEDER		**36,645.11 Amps**

Calculation for Fault Value at XFMR-HSE SECONDARY FEEDER

Transformer		
Starting Fault Value at Primary to XFMR-S PRIMARY FEEDER	===>	36645.11
Transformer %Z (150-deg rise)		5.9
Transformer KVA		300
Line to Line Primary Voltage		480
Line to Line Secondary Voltage		208
Phase (1ph = 1, 3ph = 1.73)		1.73
f-Factor		5.984585488
Multiplier "M" = 1/(1+f)		0.143172419
Line to Line RMS Fault at XFMR-HSE SECONDARY FEEDER		12107.46557 Amps

Calculation for Fault Value at PANEL SITE-L

Conductor		
Starting Fault Value at XFMR-HSE SECONDARY...	===>	12107.47 Amps
Wire Size	400 kcmil	
Conductor type (AL=Alum, CU=Copper)		AL
Conduit type (S=Steel, P=PVC)		S
Z /1000' @.85pf (NEC Table 9)		0.073
No. of Parellel Runs		3
Distance (Feet)		5
Voltage (L-L)		208
Phase (1ph = 2, 3ph = 1.73)		1.73
f-Factor		0.012252
Multiplier "M" = 1/(1+f)		0.987896
Line to Line RMS Fault at PANEL SITE-L		**11,960.92 Amps**

FEEDER SCHEDULE...

ID NO	EMT RACEWAY	WIRE COUNT & SIZE	AMPACITY/ OCP SIZE	NOTES
03N	3/4"	4 - #8, 1#8 G.	30 / 30	60-deg rating
03	3/4"	3 - #8 1#8 G.	30 / 30	60-deg rating
04N	1"	4 - #6, 1#8 G.	40 / 40	60-deg rating
04	1"	3 - #6, 1#8 G.	40 / 40	60-deg rating
05N	1 1/4"	4 - #4, 1#8 G.	55 / 50	60-deg rating
05	1"	3 - #4, 1#8 G.	55 / 50	60-deg rating
06N	1 1/4"	4 - #3, 1#8 G.	65 / 60	60-deg rating
06	1 1/4"	3 - #3, 1#8 G.	65 / 60	60-deg rating
07N	1 1/4"	4 - #2, 1#6 G.	75 / 70	60-deg rating
7	1 1/4"	3 - #2, 1#6 G.	75 / 70	60-deg rating
08N	1 1/4"	4 - #1, 1#6 G.	85 / 80	60-deg rating
8	1 1/4"	3 - #1, 1#6 G.	85 / 80	60-deg rating
10N	2"	4 - #1/0, 1#6 G.	120 / 100	75-deg rating
10	1 1/2"	3 - #1/0, 1#6 G.	120 / 100	75-deg rating
12N	2"	4 - #1/0, 1#4 G.	120 / 110	75-deg rating
12	1 1/2"	3 - #1/0, 1#4 G.	120 / 110	75-deg rating
13N	2"	4 - #2/0, 1 #4 G.	135 / 125	75-deg rating
13	2"	3 - #2/0, 1 #4 G.	135 / 125	75-deg rating
15N	2"	4 - #3/0, 1 #4 G.	155 / 150	75-deg rating
15	2"	3 - #3/0, 1 #4 G.	155 / 150	75-deg rating
18N	2 1/2"	4 - #4/0, 1 #4 G.	180 / 175	75-deg rating
18	2"	3 - #4/0, 1 #4 G.	180 / 175	75-deg rating
20N	2 1/2"	4 -250kcmil, 1 #4 G.	205 / 200	75-deg rating
20	2 1/2"	3 -250kcmil, 1 #4 G.	205 / 200	75-deg rating
22N	2 1/2"	4 -300kcmil, 1 #2 G.	230 / 225	75-deg rating
22	2 1/2"	3 -300kcmil, 1 #2 G.	230 / 225	75-deg rating
25N	3"	4-350kcmil, 1 #2 G.	250 / 250	75-deg rating
25	2 1/2"	3-350kcmil, 1 #2 G.	250 / 250	75-deg rating
27N	3"	4-400kcmil, 1 #2 G.	270 / 250	75-deg rating
27	2 1/2"	3-400kcmil, 1 #2 G.	270 / 250	75-deg rating
30N	3"	4-500kcmil, 1 #2 G.	310 / 300	75-deg rating
30	3"	3-500kcmil, 1 #2 G.	310 / 300	75-deg rating
34N	3 1/2"	4-600kcmil, 1 #1 G.	340 / 300	75-deg rating
34	3"	3-600kcmil, 1 #1 G.	340 / 300	75-deg rating
40N	(2) 2 1/2"	4 -250kcmil, 1 #1 G.	410 / 400	75-deg rating
40	(2) 2 1/2"	3 -250kcmil, 1 #1 G.	410 / 400	75-deg rating
45N	(2) 2 1/2"	4 -300kcmil, 1 #1/0 G.	460 / 450	75-deg rating
45	(2) 2 1/2"	3 -300kcmil, 1 #1/0 G.	460 / 450	75-deg rating
50N	(2) 3"	4-350kcmil, 1 #1/0 G.	500 / 500	75-deg rating
50	(2) 2 1/2"	3-350kcmil, 1 #1/0 G.	500 / 500	75-deg rating
60N	(2) 3"	4-500kcmil, 1 #2/0 G.	620 / 600	75-deg rating
60	(2) 3"	3-500kcmil, 1 #2/0 G.	620 / 600	75-deg rating
75N	(3) 3"	4-350kcmil, 1 #3/0 G.	750 / 750	75-deg rating
75	(3) 2 1/2"	3-350kcmil, 1 #3/0 G.	750 / 750	75-deg rating
80N	(3) 3"	4-400kcmil, 1 #3/0 G.	810 / 800	75-deg rating
80	(3) 2 1/2"	3-400kcmil, 1 #3/0 G.	810 / 800	75-deg rating
90N	(3) 3"	4-500kcmil, 1 #4/0 G.	930 / 900	75-deg rating
90	(3) 3"	3-500kcmil, 1 #4/0 G.	930 / 900	75-deg rating
100N	(3) 3 1/2"	4-600kcmil, 1 #4/0 G.	1020 / 1000	75-deg rating
100	(3) 3"	3-600kcmil, 1 #4/0 G.	1020 / 1000	75-deg rating
120N	(4) 3"	4-500kcmil, 1 #250 G.	1240 / 1200	75-deg rating
120	(4) 3"	3-500kcmil, 1 #250 G.	1240 / 1200	75-deg rating
150N	(5) 3"	4-500kcmil, 1 #350 G.	1550/1500	75-deg rating
150	(5) 3"	3-500kcmil, 1 #350 G.	1550/1500	75-deg rating
160N	(6) 3"	4-400kcmil, 1 #350 G.	1620/1600	75-deg rating
160	(6) 2 1/2"	3-400kcmil, 1 #350 G.	1620/1600	75-deg rating
200N	(6) 2 1/2"	4-600kcmil, 1 #400 G.	2040/2000	75-deg rating
200	(6) 3"	3-600kcmil, 1 #400 G.	2040/2000	75-deg rating

NOTE: Based on THHN insulation, EMT conduit and Chapter 9, Table 4 and Table 5a for compact AL wire, of the NEC, 2008 edition.

* - Indicates acceptable overcurrent device rating for single feeder. This rating shall not be used for sizing parallel feeders.

** - Indicates overcurrent protective device rating that may be used for this feeder. The Contractor shall install feeder size indicated even if Code allows smaller to be used.

file: q:\engineering tools\engineering tools\fdr-schd-mstr\fdr schedule (AL-EMT).xls

GENERAL NOTES

1. ALL CONDUCTORS ARE #12 AWG CU UNLESS NOTED OTHERWISE. MC FEEDER CAN BE USED WHERE APPROPRIATE AND AT CONTRACTOR'S DISCRETION. MC FEEDER SHALL BE SIZED PER NEC REQUIREMENTS.
2. RISER DIAGRAM IS NOT REPRESENTATIVE OF ACTUAL SWITCHBOARD LAYOUT. SEE ELECTRICAL ROOMS OR PANEL LOCATIONS (SHEET E2.01-E2.08) AND PANEL SCHEDULES (SHEET E5.02-E5.03) FOR PHYSICAL LAYOUT WITH RESPECT TO ACTUAL MANUFACTURED AND POTENTIAL INSTALLED CONDITIONS.
3. EQUIPMENT SHOWN BOLD IS NEW.
4. EQUIPMENT SHOWN DASHED IS EXISTING.
5. FIELD VERIFY EXISTING CONDITIONS PRIOR TO CONSTRUCTION.
6. ALL SWITCHBOARDS AND PANELBOARDS SUPPLIED BY A FEEDER SHALL BE MARKED TO INDICATE THE DEVICE OR EQUIPMENT WHERE THE POWER SUPPLY ORIGINATES PER NEC 408.4(B).
7. FEEDERS ARE ALUMINUM WITH THHN/THWN INSULATION.
8. PROVIDE PULL BOXES AS REQUIRED BY THE NEC.
9. SHORT CIRCUIT CURRENTS LESS THAN 10,000 AIC FOR 208V PANELS AND 14,000 AIC FOR 480V PANELS ARE NOT SHOWN.
10. THE ONE-LINE DIAGRAM IS DIAGRAMMATIC AND DOES NOT SHOW THE ACTUAL ROUTING OF RACEWAYS.
11. FOR TWO SECTION PANELS PROVIDE FULL SIZE FEEDER CONNECTIONS FROM SECTION 1 TO SECTION 2.
12. NOT ALL CIRCUIT BREAKERS ARE SHOWN, REFER TO PANEL AND SWITCHBOARD SCHEDULES FOR OTHER LOADS SERVED, AND SPARE CIRCUIT BREAKERS.

FLAG NOTES

1. CONCRETE HOUSEKEEPING PAD UNDER TRANFORMER(S) /SWITCHBOARD(S)/ GENERATOR(S) TO BE PROVIDED BY OTHERS. REFER TO STRUCTURAL PLANS FOR INSTALLATION DETAILS.
2. CT ENCLOSURE/TERMINAL CABINET PER POWER COMPANY REQUIREMENTS.
3. INSTALL FEEDER FROM TRANSFORMER SECONDARY TO MAIN BREAKER IN SWITCHBOARD/PANEL (NOT TO EXCEED 25'-0" PER NEC 240.21(C)(6).
4. TYPICAL HOUSE PANEL: PROVIDE AND INSTALL ·(1) 2" CONDUIT AND 100A FEEDER TO TENANT SPACE FROM MAIN SWITCHGEAR OR SWITCHBOARD METER PROVIDED BY PSE UTILITY
5. (1) 1-1/2" EMT CONDUIT TO BE PROVIDED FROM ELECTRICAL ROOM AND TO BE CAPPED AT ROOF.
6. CAP 4" RACEWAY IN FUTURE TENANT SPACE WITH PULL STRING.
7. REFER TO DETAIL 1/E5.01 FOR GROUNDING DIAGRAM.

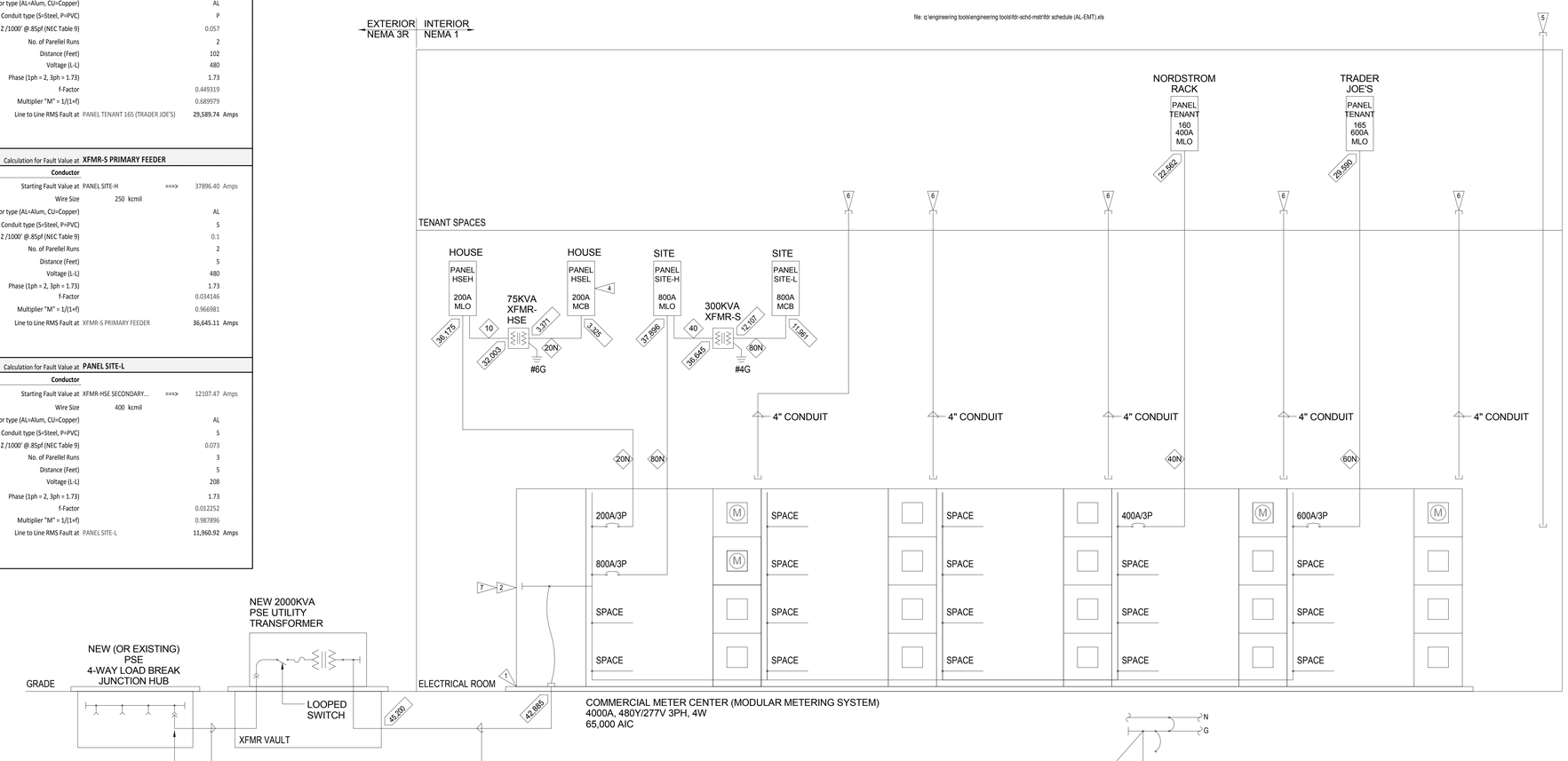

ONE-LINE RISER DIAGRAM

SCALE: NTS

GROUNDING DETAIL

SCALE: NTS

SEANTAC ELECTRIC INC.
7056 SOUTH 220TH STREET
KENT, WA 98032
PHONE (253) 872-6553
FAX (253) 872-4112
www.seatacelectric.com

THE VILLAGE AT TOTEM LAKE - BLDG B
KIRKLAND, WASHINGTON 98034

No.	Description	Date

CENTERCAL PROPERTIES, LLC
1600 EAST FRANKLIN
EL SEGUNDO, CA 90245

ONE-LINE RISER DIAGRAM

PROJECT NUMBER	15115
DATE	04/27/2016
DRAWN BY	CM, IE, NP
CHECKED BY	CM
	E5.01
SCALE	12" = 1'-0"

60% CD SET

C:\Users\ianc\Documents\Totem Lake_Elec_Bldg_B_IanEdmunds.rvt

5/16/2016 3:27:19 PM

SWITCHBOARD: MDS-B MAIN SECTION

LOCATION: ELECTRICAL ROOM **VOLTAGE:** 480Y/277V.3Ø4W.
MAIN DEVICE: 4000 A **AIC RATING:** 65,000 AMPS SYMMETRICAL
BUS AMPS: 4000 **SPECIAL:**

MAIN SECTION

C.T. COMPARTMENT: CURRENT TRANSFORMER, POTENTIAL TRANSFORMER
CUSTOMER POWER QUALITY METER

MAIN DEVICE

FRAME	POLES	FUSE	SPECIAL	DESCRIPTION/NAMEPLATE
4000	3	4000		

DISTRIBUTION SUMMARY	Load
MDS-B - Section #2 (Nordstorms)	0 VA

DISTRIBUTION SECTION No. 2

CKT	FRAME	POLES	FUSE	LOAD	DESCRIPTION/NAMEPLATE	NOTES
1						

DISTRIBUTION SECTION No. 3

CKT	FRAME	POLES	FUSE	LOAD	DESCRIPTION/NAMEPLATE	NOTES
1						

DISTRIBUTION SECTION No. 4

CKT	FRAME	POLES	FUSE	Load	DESCRIPTION/NAMEPLATE	NOTES
1	200 A	3	200	9930...	PANEL HSEH-B	
2	800 A	3	800	0 VA	SITE-H - 800A	
3	--	--	--	0 VA	SPACE	--
4	--	--	--	0 VA	SPACE	--
5	--	--	--	0 VA	SPACE	--
6	--	--	--	0 VA	SPACE	--

DISTRIBUTION SECTION No. 6

CKT	FRAME	POLES	FUSE	Load	DESCRIPTION/NAMEPLATE	NOTES
1	--	--	--	0 VA	SPACE	--
2	--	--	--	0 VA	SPACE	--
3	--	--	--	0 VA	SPACE	--
4	--	--	--	0 VA	SPACE	--
5	--	--	--	0 VA	SPACE	--
6	--	--	--	0 VA	SPACE	--

DISTRIBUTION SECTION No. 8

CKT	FRAME	POLES	FUSE	Load	DESCRIPTION/NAMEPLATE	NOTES
1	--	--	--	0 VA	SPACE	--
2	--	--	--	0 VA	SPACE	--
3	--	--	--	0 VA	SPACE	--
4	--	--	--	0 VA	SPACE	--
5	--	--	--	0 VA	SPACE	--
6	--	--	--	0 VA	SPACE	--

LOAD SUMMARY

	SWBD LOAD	CONN. LOAD

LOAD CLASSIFICATION	CONNECTED	DEMAND	ESTIMATED	PANEL TOTALS	
				CONN. LOAD:	0 VA
				EST. DEMAND LOAD:	0 VA
				CONN. CURRENT:	0 A
				EST. DEMAND...	0 A

NOTES:

PANELBOARD: SITE-H

LOCATION: **VOLTAGE:** 480Y/277 V. 3 ø 4 W.
MOUNTING: SURFACE NEMA 1 **A.I.C. RATING:** 14,000 AMPS SYMMETRICAL
MAIN DEVICE: 800 A MLO **SPECIAL:**
BUS AMPS: 800

LOAD DESCRIPTION	BKR	P	CKT	A		B		C		CKT	P	BKR	LOAD DESCRIPTION
SPARE	20 A	1	1	0.0	0.0					2	1	20 A	SPARE
SPARE	20 A	1	3			0.0	0.0			4	1	20 A	SPARE
SPARE	20 A	1	5					0.0	0.0	6	1	20 A	SPARE
SPARE	20 A	1	7	0.0	0.0					8	1	20 A	SPARE
SPARE	20 A	1	9			0.0	0.0			10	1	20 A	SPARE
SPARE	20 A	1	11					0.0	0.0	12	1	20 A	SPARE
SPARE	20 A	1	13	0.0	0.0					14	1	20 A	SPARE
SPARE	20 A	1	15			0.0	0.0			16	1	20 A	SPARE
SPARE	20 A	1	17					0.0	0.0	18	1	20 A	SPARE
SPARE	20 A	1	19	0.0	0.0					20	1	20 A	SPARE
SPARE	20 A	1	21			0.0	0.0			22	1	20 A	SPARE
SPARE	20 A	1	23					0.0	0.0	24	1	20 A	SPARE
SPARE	20 A	1	25	0.0	0.0					26	1	20 A	SPARE
SPARE	20 A	1	27			0.0	0.0			28	1	20 A	SPARE
SPARE	20 A	1	29					0.0	0.0	30	1	20 A	SPARE
SPARE	20 A	1	31	0.0	0.0					32	1	20 A	SPARE
SPARE	20 A	1	33			0.0	0.0			34	1	20 A	SPARE
SPARE	20 A	1	35					0.0	0.0	36	1	20 A	SPARE
SPARE	20 A	1	37	0.0	0.0					38	1	20 A	SPARE
SPARE	20 A	1	39			0.0	0.0			40	1	20 A	SPARE
SPARE	20 A	1	41					0.0	0.0	42	1	20 A	SPARE
SPARE	20 A	1	43	0.0	0.0					44	1	20 A	SPARE
SPARE	20 A	1	45			0.0	0.0			46	1	20 A	SPARE
SPARE	20 A	1	47					0.0	0.0	48	1	20 A	SPARE
SPARE	20 A	1	49	0.0	0.0					50	1	20 A	SPARE
SPARE	20 A	1	51			0.0	0.0			52	1	20 A	SPARE
SPARE	20 A	1	53					0.0	0.0	54	1	20 A	SPARE
SPARE	20 A	1	55	0.0	0.0					56	1	20 A	SPARE
SPARE	20 A	1	57			0.0	0.0			58	1	20 A	SPARE
SPARE	20 A	1	59					0.0	0.0	60	1	20 A	SPARE
SPARE	20 A	1	61	0.0	0.0					62	1	20 A	SPARE
SPARE	20 A	1	63			0.0	0.0			64	1	20 A	SPARE
SPARE	20 A	1	65					0.0	0.0	66	1	20 A	SPARE
SPARE	20 A	1	67	0.0	0.0					68	1	20 A	SPARE
SPARE	20 A	1	69			0.0	0.0			70	1	20 A	SPARE
SPARE	20 A	1	71					0.0	0.0	72	1	20 A	SPARE
SPARE	20 A	1	73	0.0	0.0					74	1	20 A	SPARE
SPARE	20 A	1	75			0.0	0.0			76	1	20 A	SPARE
SPARE	20 A	1	77					0.0	0.0	78	1	20 A	SPARE
SPARE	20 A	1	79	0.0	0.0					80			
SPARE	20 A	1	81			0.0	0.0			82	3	400 A	PANEL SITE-L VIA XFMR-S 300 kVA
SPARE	20 A	1	83					0.0	0.0	84			
	TOTAL LOAD:			0 kVA		0 kVA		0 kVA					
	TOTAL AMPS:			0 A		0 A		0 A					

LOAD CLASSIFICATION	CONNECTED	DEMAND	ESTIMATED	PANEL TOTALS	
				CONNECTED LOAD:	0 VA
				ESTIMATED DEMAND:	0 VA
				CONNECTED CURRENT:	0 A
				EST. DEMAND CURRENT:	0 A

NOTES:

PANELBOARD: SITE-L

LOCATION: ELECTRICAL ROOM **VOLTAGE:** 208Y/120 V. 3 ø 4 W.
MOUNTING: SURFACE NEMA 1 **A.I.C. RATING:** 10,000 AMPS SYMMETRICAL
MAIN DEVICE: 800 A MAIN CB **SPECIAL:**
BUS AMPS: 800

LOAD DESCRIPTION	BKR	P	CKT	A		B		C		CKT	P	BKR	LOAD DESCRIPTION
SPARE	20 A	1	1	0.0	0.0					2	1	20 A	SPARE
SPARE	20 A	1	3			0.0	0.0			4	1	20 A	SPARE
SPARE	20 A	1	5					0.0	0.0	6	1	20 A	SPARE
SPARE	20 A	1	7	0.0	0.0					8	1	20 A	SPARE
SPARE	20 A	1	9			0.0	0.0			10	1	20 A	SPARE
SPARE	20 A	1	11					0.0	0.0	12	1	20 A	SPARE
SPARE	20 A	1	13	0.0	0.0					14	1	20 A	SPARE
SPARE	20 A	1	15			0.0	0.0			16	1	20 A	SPARE
SPARE	20 A	1	17					0.0	0.0	18	1	20 A	SPARE
SPARE	20 A	1	19	0.0	0.0					20	1	20 A	SPARE
SPARE	20 A	1	21			0.0	0.0			22	1	20 A	SPARE
SPARE	20 A	1	23					0.0	0.0	24	1	20 A	SPARE
SPARE	20 A	1	25	0.0	0.0					26	1	20 A	SPARE
SPARE	20 A	1	27			0.0	0.0			28	1	20 A	SPARE
SPARE	20 A	1	29					0.0	0.0	30	1	20 A	SPARE
SPARE	20 A	1	31	0.0	0.0					32	1	20 A	SPARE
SPARE	20 A	1	33			0.0	0.0			34	1	20 A	SPARE
SPARE	20 A	1	35					0.0	0.0	36	1	20 A	SPARE
SPARE	20 A	1	37	0.0	0.0					38	1	20 A	SPARE
SPARE	20 A	1	39			0.0	0.0			40	1	20 A	SPARE
SPARE	20 A	1	41					0.0	0.0	42	1	20 A	SPARE
SPARE	20 A	1	43	0.0	0.0					44	1	20 A	SPARE
SPARE	20 A	1	45			0.0	0.0			46	1	20 A	SPARE
SPARE	20 A	1	47					0.0	0.0	48	1	20 A	SPARE
SPARE	20 A	1	49	0.0	0.0					50	1	20 A	SPARE
SPARE	20 A	1	51			0.0	0.0			52	1	20 A	SPARE
SPARE	20 A	1	53					0.0	0.0	54	1	20 A	SPARE
SPARE	20 A	1	55	0.0	0.0					56	1	20 A	SPARE
SPARE	20 A	1	57			0.0	0.0			58	1	20 A	SPARE
SPARE	20 A	1	59					0.0	0.0	60	1	20 A	SPARE
SPARE	20 A	1	61	0.0	0.0					62	1	20 A	SPARE
SPARE	20 A	1	63			0.0	0.0			64	1	20 A	SPARE
SPARE	20 A	1	65					0.0	0.0	66	1	20 A	SPARE
SPARE	20 A	1	67	0.0	0.0					68	1	20 A	SPARE
SPARE	20 A	1	69			0.0	0.0			70	1	20 A	SPARE
SPARE	20 A	1	71					0.0	0.0	72	1	20 A	SPARE
SPARE	20 A	1	73	0.0	0.0					74	1	20 A	SPARE
SPARE	20 A	1	75			0.0	0.0			76	1	20 A	SPARE
SPARE	20 A	1	77					0.0	0.0	78	1	20 A	SPARE
SPARE	20 A	1	79	0.0	0.0					80	1	20 A	SPARE
SPARE	20 A	1	81			0.0	0.0			82	1	20 A	SPARE
SPARE	20 A	1	83					0.0	0.0	84	1	20 A	SPARE
SPARE	20 A	1	85	0.0	0.0					86	1	20 A	SPARE
SPARE	20 A	1	87			0.0	0.0			88	1	20 A	SPARE
SPARE	20 A	1	89					0.0	0.0	90	1	20 A	SPARE
SPARE	20 A	1	91	0.0	0.0					92	1	20 A	SPARE
SPARE	20 A	1	93			0.0	0.0			94	1	20 A	SPARE
SPARE	20 A	1	95					0.0	0.0	96	1	20 A	SPARE
SPARE	20 A	1	97	0.0	0.0					98	1	20 A	SPARE
SPARE	20 A	1	99			0.0	0.0			100	1	20 A	SPARE
SPARE	20 A	1	101					0.0	0.0	102	1	20 A	SPARE
SPARE	20 A	1	103	0.0	0.0					104	1	20 A	SPARE
SPARE	20 A	1	105			0.0	0.0			106	1	20 A	SPARE
SPARE	20 A	1	107					0.0	0.0	108	1	20 A	SPARE
SPARE	20 A	1	109	0.0	0.0					110	1	20 A	SPARE
SPARE	20 A	1	111			0.0	0.0			112	1	20 A	SPARE
SPARE	20 A	1	113					0.0	0.0	114	1	20 A	SPARE
SPARE	20 A	1	115	0.0	0.0					116	1	20 A	SPARE
SPARE	20 A	1	117			0.0	0.0			118	1	20 A	SPARE
SPARE	20 A	1	119					0.0	0.0	120	1	20 A	SPARE
SPARE	20 A	1	121	0.0	0.0					122	1	20 A	SPARE
SPARE	20 A	1	123			0.0	0.0			124	1	20 A	SPARE
SPARE	20 A	1	125					0.0	0.0	126	1	20 A	SPARE
	TOTAL LOAD:			0 kVA		0 kVA		0 kVA					
	TOTAL AMPS:			0 A		0 A		0 A					

LOAD CLASSIFICATION	CONNECTED	DEMAND	ESTIMATED	PANEL TOTALS	
				CONNECTED LOAD:	0 VA
				ESTIMATED DEMAND:	0 VA
				CONNECTED CURRENT:	0 A
				EST. DEMAND CURRENT:	0 A

NOTES:

PANELBOARD: HSEH-B

LOCATION: ELECTRICAL ROOM **VOLTAGE:** 480Y/277 V. 3 ø 4 W.
MOUNTING: SURFACE NEMA 1 **A.I.C. RATING:** 42,000 AMPS SYMMETRICAL
MAIN DEVICE: 200 A MLO **SPECIAL:**
BUS AMPS: 200 AMPS

LOAD DESCRIPTION	BKR	P	CKT	PHASE A kVA	PHASE B kVA	PHASE C kVA	CKT	P	BKR	LOAD DESCRIPTION
Other	20 A	1	1	0.9	0.3		2	1	20 A	LTG - BOH
SPARE	20 A	1	3		0.0	1.5	4	1	20 A	LTG - HALLWAYS
SPARE	20 A	1	5			0.0	0.0	6	1	20 A	SPARE
SPARE	20 A	1	7	0.0	0.0		8	1	20 A	SPARE
SPARE	20 A	1	9		0.0	0.0	10	1	20 A	SPARE
SPARE	20 A	1	11			0.0	0.0	12	1	20 A	SPARE
SPARE	20 A	1	13	0.0	0.0		14	1	20 A	SPARE
SPARE	20 A	1	15		0.0	0.0	16	1	20 A	SPARE
SPARE	20 A	1	17			0.0	0.0	18	1	20 A	SPARE
SPARE	20 A	1	19	0.0	0.0		20	1	20 A	SPARE
SPARE	20 A	1	21		0.0	0.0	22	1	20 A	SPARE
SPARE	20 A	1	23			0.0	0.0	24	1	20 A	SPARE
SPARE	20 A	1	25	0.0	0.0		26	1	20 A	SPARE
SPARE	20 A	1	27		0.0	0.0	28	1	20 A	SPARE
SPARE	20 A	1	29			0.0	0.0	30	1	20 A	SPARE
SPARE	20 A	1	31	0.0	0.0		32	1	20 A	SPARE
SPARE	20 A	1	33		0.0	0.0	34	1	20 A	SPARE
SPARE	20 A	1	35			0.0	0.0	36	1	20 A	SPARE
SPARE	20 A	1	37	0.0	2.5		38			
SPARE	20 A	1	39		0.0	2.7	40	3	100 A	PANEL HSEL-B VIA 75kVA XFMR T-HSE-B
SPARE	20 A	1	41			0.0	2.0	42		
	TOTAL LOAD:			4 kVA	4 kVA	2 kVA				
	TOTAL AMPS:			14 A	16 A	7 A				

LOAD CLASSIFICATION	CONNECTED	DEMAND	ESTIMATED	PANEL TOTALS	
Other	2700 VA	100.00%	2700 VA		
RCPT	7200 VA	100.00%	7200 VA	CONNECTED LOAD:	9930 VA
LTG	30 VA	125.00%	38 VA	ESTIMATED DEMAND:	9938 VA
				CONNECTED CURRENT:	12 A
				EST. DEMAND CURRENT:	12 A

NOTES:

PANELBOARD: HSEL-B

LOCATION: ELECTRICAL ROOM **VOLTAGE:** 208Y/120 V. 3 ø 4 W.
MOUNTING: SURFACE NEMA 1 **A.I.C. RATING:** 10,000 AMPS SYMMETRICAL
MAIN DEVICE: 200 A MAIN CB **SPECIAL:**
BUS AMPS: 200 AMPS

LOAD DESCRIPTION	BKR	P	CKT	PHASE A kVA	PHASE B kVA	PHASE C kVA	CKT	P	BKR	LOAD DESCRIPTION
REC - EXTERIOR	20 A	1	1	0.2	0.0		2	1	20 A	SPARE
REC (DED) - TELE/DATA	20 A	1	3		0.4	0.0	4	1	20 A	SPARE
REC - ELECTRICAL ROOM	20 A	1	5			0.4	0.0	6	1	20 A	SPARE
REC - FESTIVAL LTG	20 A	1	7	0.7	0.0		8	1	20 A	SPARE
REC - FESTIVAL LTG	20 A	1	9		1.1	0.0	10	1	20 A	SPARE
REC - FESTIVAL LTG	20 A	1	11			0.7	0.0	12	1	20 A	SPARE
REC - BOH HALLWAY	20 A	1	13	1.1	0.0		14	1	20 A	SPARE
REC - ELEC RM, RISER RM	20 A	1	15		0.4	0.0	16	1	20 A	SPARE
REC - TRASH, DOCK...	20 A	1	17			0.9	0.0	18	1	20 A	SPARE
REC - SW HALLWAY	20 A	1	19	0.5	0.0		20	1	20 A	SPARE
RCPT	20 A	1	21		0.9	0.0	22	1	20 A	SPARE
SPARE	20 A	1	23			0.0	0.0	24	1	20 A	SPARE
SPARE	20 A	1	25	0.0	0.0		26	1	20 A	SPARE
SPARE	20 A	1	27		0.0	0.0	28	1	20 A	SPARE
SPARE	20 A	1	29			0.0	0.0	30	1	20 A	SPARE
SPARE	20 A	1	31	0.0	0.0		32	1	20 A	SPARE
SPARE	20 A	1	33		0.0	0.0	34	1	20 A	SPARE
SPARE	20 A	1	35			0.0	0.0	36	1	20 A	SPARE
SPARE	20 A	1	37	0.0	0.0		38	1	20 A	SPARE
SPARE	20 A	1	39		0.0	0.0	40	1	20 A	SPARE
SPARE	20 A	1	41			0.0	0.0	42	1	20 A	SPARE
	TOTAL LOAD:			3 kVA	3 kVA	2 kVA				
	TOTAL AMPS:			22 A	23 A	17 A				

LOAD CLASSIFICATION	CONNECTED	DEMAND	ESTIMATED	PANEL TOTALS	
RCPT	7200 VA	100.00%	7200 VA		
				CONNECTED LOAD:	7200 VA
				ESTIMATED DEMAND:	7200 VA
				CONNECTED CURRENT:	20 A
				EST. DEMAND CURRENT:	20 A

NOTES:

PANELBOARD: B-160

LOCATION: **VOLTAGE:** 480Y/277 V. 3 ø 4 W.
MOUNTING: SURFACE NEMA 1 **A.I.C. RATING:** 42,000 AMPS SYMMETRICAL
MAIN DEVICE: 400 A MLO **SPECIAL:**
BUS AMPS: 400 AMPS

LOAD DESCRIPTION	BKR	P	CKT	A		B		C		CKT	P	BKR	LOAD DESCRIPTION
SPARE	20 A	1	1	0.0	0.0					2	1	20 A	SPARE
SPARE	20 A	1	3			0.0	0.0			4	1	20 A	SPARE
SPARE	20 A	1	5					0.0	0.0	6	1	20 A	SPARE
SPARE	20 A	1	7	0.0	0.0					8	1	20 A	SPARE
SPARE	20 A	1	9			0.0	0.0			10	1	20 A	SPARE
SPARE	20 A	1	11					0.0	0.0	12	1	20 A	SPARE
SPARE	20 A	1	13	0.0	0.0					14	1	20 A	SPARE
SPARE	20 A	1	15			0.0	0.0			16	1	20 A	SPARE
SPARE	20 A	1	17					0.0	0.0	18	1	20 A	SPARE
SPARE	20 A	1	19	0.0	0.0					20	1	20 A	SPARE
SPARE	20 A	1	21			0.0	0.0			22	1	20 A	SPARE
SPARE	20 A	1	23					0.0	0.0	24	1	20 A	SPARE
SPARE	20 A	1	25	0.0	0.0					26	1	20 A	SPARE
SPARE	20 A	1	27			0.0	0.0			28	1	20 A	SPARE
SPARE	20 A	1	29					0.0	0.0	30	1	20 A	SPARE
SPARE	20 A	1	31	0.0	0.0					32	1	20 A	SPARE
SPARE	20 A	1	33			0.0	0.0			34	1	20 A	SPARE
SPARE	20 A	1	35					0.0	0.0	36	1	20 A	SPARE
SPARE	20 A	1	37	0.0	0.0					38	1	20 A	SPARE
SPARE	20 A	1	39			0.0	0.0			40	1	20 A	SPARE
SPARE	20 A	1	41					0.0	0.0	42	1	20 A	SPARE
	TOTAL LOAD:			0 kVA		0 kVA		0 kVA					
	TOTAL AMPS:			0 A		0 A		0 A					

LOAD CLASSIFICATION	CONNECTED	DEMAND	ESTIMATED	PANEL TOTALS	
				CONNECTED LOAD:	0 VA
				ESTIMATED DEMAND:	0 VA
				CONNECTED CURRENT:	0 A
				EST. DEMAND CURRENT:	0 A

NOTES:

PANELBOARD: B-165

LOCATION: **VOLTAGE:** 480Y/277 V. 3 ø 4 W.
MOUNTING: SURFACE NEMA 1 **A.I.C. RATING:** 42,000 AMPS SYMMETRICAL
MAIN DEVICE: 800 A MLO **SPECIAL:**
BUS AMPS: 600 AMPS

LOAD DESCRIPTION	BKR	P	CKT	PHASE A kVA	PHASE B kVA	PHASE C kVA	CKT	P	BKR	LOAD DESCRIPTION
SPARE	20 A	1	1	0.0	0.0		2	1	20 A	SPARE
SPARE	20 A	1	3		0.0	0.0	4	1	20 A	SPARE
SPARE	20 A	1	5			0.0	0.0	6	1	20 A	SPARE
SPARE	20 A	1	7	0.0	0.0		8	1	20 A	SPARE
SPARE	20 A	1	9		0.0	0.0	10	1	20 A	SPARE
SPARE	20 A	1	11			0.0	0.0	12	1	20 A	SPARE
SPARE	20 A	1	13	0.0	0.0		14	1	20 A	SPARE
SPARE	20 A	1	15		0.0	0.0	16	1	20 A	SPARE
SPARE	20 A	1	17			0.0	0.0	18	1	20 A	SPARE
SPARE	20 A	1	19	0.0	0.0		20	1	20 A	SPARE
SPARE	20 A	1	21		0.0	0.0	22	1	20 A	SPARE
SPARE	20 A	1	23			0.0	0.0	24	1	20 A	SPARE
SPARE	20 A	1	25	0.0	0.0		26	1	20 A	SPARE
SPARE	20 A	1	27		0.0	0.0	28	1	20 A	SPARE
SPARE	20 A	1	29			0.0	0.0	30	1	20 A	SPARE
SPARE	20 A	1	31	0.0	0.0		32	1	20 A	SPARE
SPARE	20 A	1	33		0.0	0.0	34	1	20 A	SPARE
SPARE	20 A	1	35			0.0	0.0	36	1	20 A	SPARE
SPARE	20 A	1	37	0.0	0.0		38	1	20 A	SPARE
SPARE	20 A	1	39		0.0	0.0	40	1	20 A	SPARE
SPARE	20 A	1	41			0.0	0.0	42	1	20 A	SPARE
	TOTAL LOAD:			0 kVA	0 kVA	0 kVA				
	TOTAL AMPS:			0 A	0 A	0 A				

LOAD CLASSIFICATION	CONNECTED	DEMAND	ESTIMATED	PANEL TOTALS	
				CONNECTED LOAD:	0 VA
				ESTIMATED DEMAND:	0 VA
				CONNECTED CURRENT:	0 A
				EST. DEMAND CURRENT:	0 A

NOTES:

SEANTAC ELECTRIC INC.
7056 SOUTH 220TH STREET
KENT, WA 98032
PHONE (253) 872-6553
FAX (253) 872-4112
www.seatacelectric.com

THE VILLAGE AT TOTEM LAKE - BLDG B
KIRKLAND, WASHINGTON 98034

No.	Description	Date

CENTERCAL PROPERTIES, LLC
1600 EAST FRANKLIN
EL SEGUNDO, CA 90245

PANEL SCHEDULES

PROJECT NUMBER	15115
DATE	04/27/2016
DRAWN BY	CM, IE, NP
CHECKED BY	CM

E5.02

SCALE

60% CD SET

C:\Users\iane\Documents\Totem Lake_Elec_Bldg_B_IanEdmunds.rvt

5/16/2016 3:27:21 PM

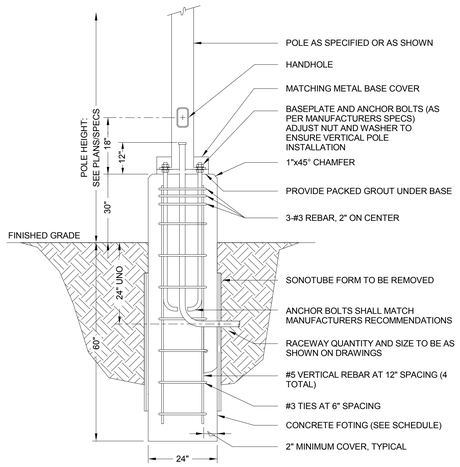

1 POLE BASE - GRADE - WITH 30" PEDESTAL
12" = 1'-0"

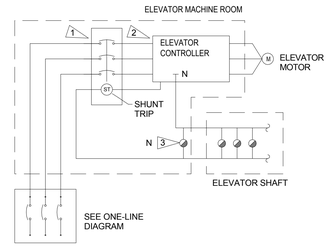

ELEVATOR SHUT DOWN CONTROL DETAIL
SCALE: NTS

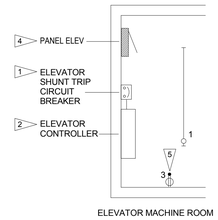

ELEVATOR MACHINE ROOM DETAIL
SCALE: NTS

ELEVATOR FLAG NOTES:

1. ELEVATOR SHUNT TRIP CIRCUIT BREAKER DISCONNECTING MEANS IN ELEVATOR MACHINE ROOM. FOR MULTIPLE ELEVATORS IN A SINGLE MACHINE ROOM SHUNT TRIP OF ANY ELEVATOR SHALL DISCONNECT POWER TO ALL ELEVATORS IN THAT ROOM. PROVIDE DEDICATED CIRCUIT(S) FOR OPERATION OF SHUNT TRIP BREAKER. PROVIDE SIGNAGE PER WASHINGTON ADMINISTRATIVE CODE FOR OPERATION OF ELEVATOR SHUNT TRIP BREAKER. SHUNT TRIP 120V POWER SHALL BE DERIVED FROM ONE OF TWO METHODS:
   - A UL LISTED SHUNT TRIP MAINLINE ASSEMBLY WITH INTEGRAL 120V CONTROL TRANSFORMER AND VISUAL INDICATION OF SHUNT TRIP POWER
   - A DEDICATED 120V ELEVATOR MACHINE ROOM PANEL CIRCUIT AND CORRESPONDING VISUAL INDICATION OF SHUNT TRIP POWER.
2. ELEVATOR CONTROLLER: PROVIDE FIRE ALARM SPEAKER CIRCUIT AND FIRE ALARM SYSTEM ELEVATOR RECALL SIGNAL AS REQUIRED.
3. HEAT DETECTORS: PROVIDE AUXILIARY N.O. CONTACT IN HEAT DETECTORS LOCATED IN ELEVATOR HOISTWAYS (WHERE REQ'D) AND IN ELEVATOR MACHINE ROOM. THESE DETECTORS AND ELEVATOR LOBBY FLOOR SMOKE DETECTORS SHALL ANNUNCIATE AS SEPARATE ZONE AND INITIATE ELEVATOR RECALL. ELEVATOR MACHINE ROOM HEAT DETECTOR SHALL BE TIED TO THE ELEVATOR SHUNT TRIP DISCONNECTING MEANS AND SHALL CUT POWER TO ELEVATOR DISCONNECT UPON ACTIVATION. HEAT DETECTORS SHALL BE 135° FIXED TEMPERATURE TYPE AND SHALL BE INSTALLED WITHIN 18" OF EACH SPRINKLER HEAD IN THE MACHINE ROOM AND HOISTWAY. MODIFY PROVISIONS AS REQUIRED TO MEET STATE ELEVATOR CODE.
4. PANEL ELEV: 30A 208V. PROVIDE 20A BREAKERS FOR SHUNT TRIP CONTROLS, ELEVATOR MACHINE ROOM AND PIT LIGHT/RECEPTACLE. PROVIDE 20A LOCK OPEN BREAKERS FOR CONTROL OF ELEVATOR CAB LIGHTS AND RECEPTACLES, VENTILATION POWER PER NEC 620-53. LOCATE PER ELEVATOR INSTALLER.
5. ELEVATOR MACHINE ROOM AND PIT LIGHT/RECEPT. RECEPTACLE TO BE DOWNSTREAM OF LIGHT. PROVIDE 120V BALLAST FOR INDICATED FIXTURE. SEE PANEL ELEV SCHEDULE FOR CIRCUIT(S).

2 ELEVATOR WASHINGTON STATE LOWRISE SOLUTION
12" = 1'-0"

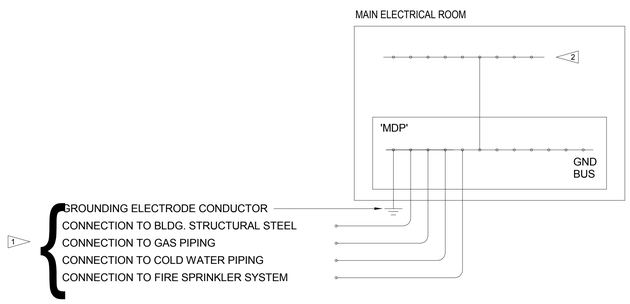

GENERAL NOTES:

1. GROUND TRANSFORMERS IN ELECTRICAL ROOMS TO GROUND BUS IN ROOM.

FLAG NOTES:

1. PROVIDE CONCRETE ENCASED GROUNDING ELECTRODE (UFER) CONSISTING OF 30' OF #3/0 BARE AL, INSTALLED PER NEC 250.52. PROVIDE SEPARATELY RUN BARE AL CONDUCTORS OF THE SAME SIZE CONNECTED TO THE COLD WATER PIPING , ABOVE GROUND GAS PIPING, AND BUILDING METAL FRAMING PER NEC250.
2. PROVIDE INTERSYSTEM BONDING BUS WITH #6 AL TO MAIN SERVICE GROUND BUS IN ACCORDANCE WITH NEC 250.94.

3 GROUNDING ONE-LINE DIAGRAM
12" = 1'-0"

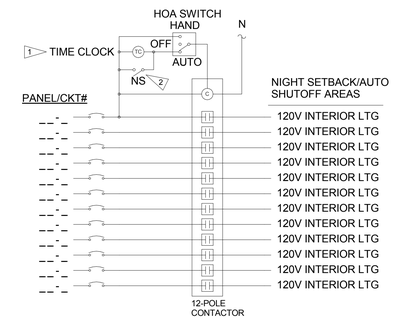

GENERAL NOTES:

1. ALL DAYLIGHT AREAS IN THIS PROJECT ARE ROOMS LESS THAN 300SF, NO DAYLIGHT CONTROLS REQUIRED.
2. ROUTE UNSWITCHED HOT CIRCUIT TO ALL BATTERY EGRESS LIGHTS AS INDICATED.

FLAG NOTES:

1. PROVIDE SINGLE-CHANNEL 24 HOUR/7-DAY/HOLIDAY PROGRAMMABLE TIMECLOCK WITH BATTERY BACKUP. COMPLIANT WITH WASHINGTON STATE ENERGY CODE REQUIREMENTS. COORDINATE PROPER INPUT VOLTAGE.
2. PROVIDE SUITABLE NIGHT SETBACK CONTROL WITH FLICKER WARNING FUNCTION TO PROVIDE UP TO TWO HOUR OPERATION. PARAGON ET1100F OR EQUAL.
3. PROVIDE 4-SCENE PROGRAMMABLE LIGHTING CONTROLLER AND OCCUPANCY SENSOR IN LIEU OF AUTOMATIC DAYLIGHT CONTROLS PER WASHINGTON STATE ENERGY CODE REQUIREMENTS.

4 INTERIOR AUTOMATIC LIGHTING CONTROLS
12" = 1'-0"

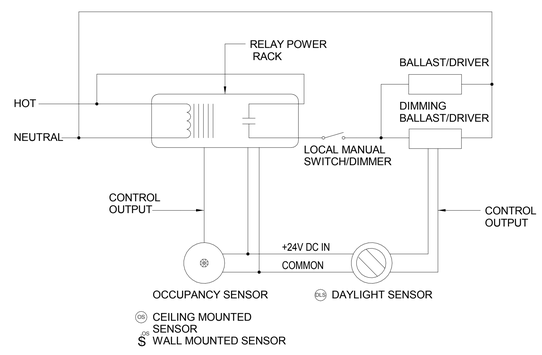

5 OCCUPANCY SENSOR WIRING DIAGRAM
12" = 1'-0"

TYPE 1

PANEL 'TBD'
208Y/120V 3PH 4W
FED FROM 'HD'
NORMAL BRANCH

FOR PANELBOARDS AND ATS

TYPE 2

PANEL 'TBD'
480/277V 3PH 4W
FED FROM UTILITY #1
NORMAL BRANCH

FOR SWITCHBOARDS AND TRANSFORMERS

GENERAL NOTES:

1. SECURE NAMEPLATE TO SURFACES.
2. NAMEPLATE TO BE 1/16" PHENOLIC PLASTIC LAMINATE WITH COLORS AS FOLLOWS "NORMAL BRANCH": FACE TO BE BLACK, ENGRAVED LETTERS TO BE WHITE.

6 PANEL NAME IDENTIFICATION DETAIL
12" = 1'-0"

SEANTAC ELECTRIC INC.
7056 SOUTH 220TH STREET
KENT, WA 98032
PHONE (253) 872-6553
FAX (253) 872-4112
www.seatacelectric.com

THE VILLAGE AT TOTEM LAKE - BLDG B
KIRKLAND, WASHINGTON 98034

No.	Description	Date

CENTERCAL PROPERTIES, LLC
1600 EAST FRANKLIN
EL SEGUNDO, CA 90245

ELECTRICAL DETAILS

PROJECT NUMBER	15115
DATE	04/27/2016
DRAWN BY	CM, IE, NP
CHECKED BY	CM
	E6.01
SCALE	12" = 1'-0"

60% CD SET

C:\Users\iane\Documents\Totem Lake_Elec_Bldg_B_IanEdmunds.rvt

5/16/2016 3:27:21 PM